Designing Production Safety Systems

by William G. Boyle, P.E.

The Petroleum Publishing Company
Tulsa, Oklahoma

The Petroleum Publishing Company
1421 South Sheridan Road/P. O. Box 1260
Tulsa, Oklahoma 74101

Library of Congress Catalog Card Number: 78-70553
International Standard Book Number: 0-87814-096-4
Printed in the United States of America

1 2 3 4 5 83 82 81 80 79

Contents

8 Valve actuators **83**

The type of valve actuator that best suits a specific situation depends on the type of power available and the type of operation required.

9 Auxiliary equipment **108**

Besides piloting, information feedback, control, and other functions are performed by auxiliary equipment that is used on the valve actuator.

10 Pilot valves **117**

Because they receive information then actuate to command another item of equipment, pilot valves are the heart of a safety valve arrangement. Three main types of pilot valves are used.

11 Other circuit components **152**

In addition to safety valves and pilots, other components in the safety system are needed for supply hookup, indication, and isolation. The most important of these circuit components are discussed here.

12 Pilot circuits **162**

Piloting circuits assemble the logic functions needed to relate the sensed condition to shutdown. Concepts discussed here for common systems can be extrapolated to other applications.

13 Hydraulic control units **180**

The relatively high pressure control signal needed by surface controlled subsurface safety valves and low ratio surface safety valves is normally supplied by a hydraulic control manifold.

14 Subsurface safety valves **200**

When the subsurface safety valve is called upon to function, it is protected in the well it serves. Subsurface safety valves are designed to function under catastrophic conditions.

15 Choosing materials **210**

Cost, availability, and strength are three key considerations in selecting the proper material for safety system equipment. Knowledge of each material's advantages and limitations is important.

16 Total system design **227**

Components, equipment, and circuits all come together in a system to provide the needed protection. Example problems in this chapter show how total system design must consider all criteria.

Index **262**

Acknowledgements

I appreciate the many people whose work this book represents. Portions of the first two chapters were extracted from an ASME paper written by Max Raulins, Harold Oubre, and Ken Robbins. David Crutchfield generated most of the original artwork. Many proofreaders made it more readable.

William G. Boyle, P.E.

Preface

This book was written for the instruction of engineering, sales, and service people in the petroleum industry. The principles of safety systems and equipment used to prevent blowouts during the production phase of oil and gas wells are explained and illustrated throughout the text. The serious student periodically should reference information from organizations such as API, NACE, and ANSI in order to remain current of innovations and regulation changes in the industry.

No book is an entirely sufficient tool for the teaching of mechanical systems and equipment. Practical experience must follow. Each should enhance the other toward your understanding of petroleum equipment, safety systems, and efficient methods.

William G. Boyle, P.E.

1

What Is Safe?

Why safety? The answer is simple. Health, wealth, and time to enjoy it. Health and time are closely related. An oilfield, especially offshore, is by its nature very dangerous. Highly flammable fluids under high pressure are being handled by large and complex equipment in a hostile environment. If things go wrong there is a high probability of injury or death.

Oilfields are run to make money. Unless the venture makes a profit, it won't last. There is a lot of money invested in the production of oil and gas. Billions of dollars of reservoir, wells, and survivors' lawsuits may be involved in a catastrophic mishap.

Lately another factor has emerged. Public concern for environmental protection has caused the government to control the industry more closely.

To protect this great investment of life and property, safety systems have been developed to reduce the chances of a mishap occurring and to minimize the effect should it happen. These systems include equipment and procedures.

A blowout, the uncontrolled flow from an oil or gas well, is difficult to relate to any other catastrophe. However, from viewing newscasts or simulated blowouts in movies, most people have become aware of the results of a blowout and fire.

Actually, natural oil seepage and gas flows have been observed for many centuries. One such occurrence, near Baku in the USSR, caused a gas-fed fire so large and long lasting that a sect of fire worshippers was formed. Although the fire diminished to a size hardly larger than a fireplace flame, it is reported that the light from the fire once could be seen from Iran, 600 miles away.

Blowouts can occur any time control is not maintained during either the drilling or the producing phase of a well (Fig. 1.1).

During drilling operations, conditions which may cause blowouts are sometimes known so blowouts can be avoided. Even when unexpected

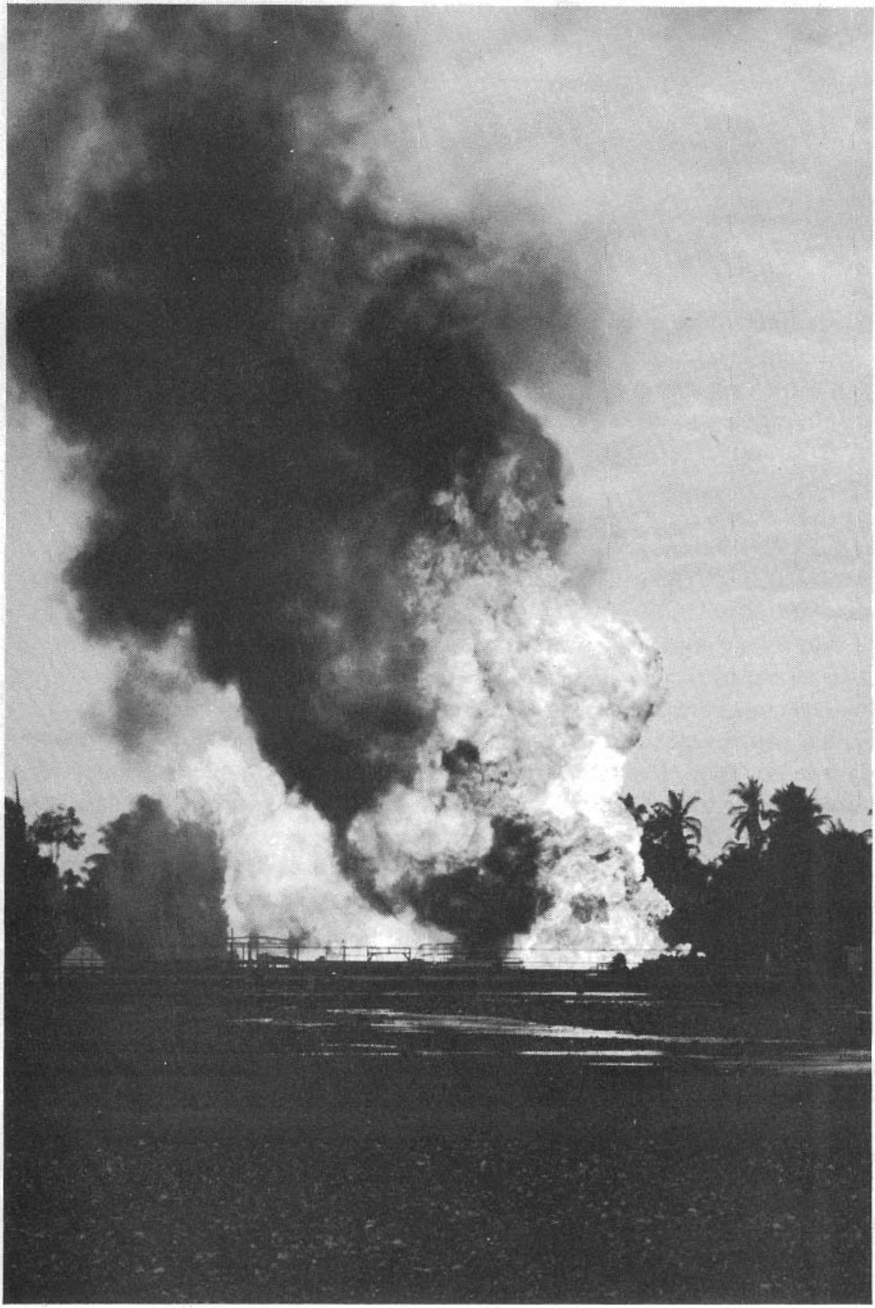

Fig. 1.1 *Production platform fire*

conditions exist the skill and knowledge of the drilling crew and the use of proper equipment to handle such emergencies usually will prevent a catastrophe. Still, blowouts while drilling do occur occasionally.

This book deals with the equipment and systems which prevent blowouts during production operations. During that period, conditions exist which are completely different from those which exist during drilling. The well has been completed and is being produced using equipment designed, tested, and shown to be adequate for the conditions existing in that well. These conditions are known beforehand; whereas during the drilling phase they are not always known.

In nearly every case, a blowout or potential blowout of a producing well is caused by a combination of factors, including:

1. An act of God (hurricane, flood, earthquake, etc.)
2. The failure of a surface control or other equipment
3. A fire or explosion which causes the failure of a surface control
4. Sabotage
5. Human error
6. Collisions, such as between a boat and wellhead
7. Lack of proper safety equipment

Oil and gas producers have always been aware of these dangers and have worked with surface and downhole flow control specialists to institute safety measures. Their reasons were identical to those of today—to protect life, investments, and the environment.

As drilling moved into areas controlled by various levels of government, such as town sites and state and federal waters, regulations were established to require stricter adherence to basic safety measures. Presently, governments are under pressure from various groups and individuals to tighten their controls even more and, in some cases, to prevent oil and gas development entirely in order to eliminate even the smallest risk of environmental contamination.

The American Petroleum Institute (API), using the assistance of many experts in the petroleum industry, has published standards, recommended practices, and guidelines to assist in the selection, calibration, and maintenance of safety valves and systems, both surface and subsurface.

Although no quantitative comparative data are available, the safety and pollution record of the petroleum industry has been enviable compared to others in the energy field. This is borne out by the results of a Library of Congress study which indicates that offshore production contributes only 1.3% of ocean oil pollution. Compare that with the 35%

from tankers and other ocean transportation, and the 31% from rivers and urban runoff.

The loss of control on flowing wells is extremely rare and usually temporary. When a blowout does occur, millions of dollars may be spent to stop it, and either safely abandon the location or recomplete the well. More millions may be spent to correct any environmental damage that may have occurred.

Because of the risks involved, it is obvious that only companies well financed and well staffed with experienced personnel are able to compete in this field.

The percentage of oil and gas lost through blowouts is minute compared to the volume produced and used. Where blowouts do occur, the publicity they receive usually distorts the relative losses and damage to environment. Each blowout causes a review of the safety systems used and initiation of further measures to prevent a recurrence.

Considering the amount of energy provided by the petroleum industry, the loss of energy and lives has been extremely small.

Nothing is completely safe. No one will do everything right and every piece of equipment eventually will fail. So the safety system must be built and operated to reduce the hazards when failure occurs. Safety systems are built in and added on. Much of the system must be accomplished by conservative design of the equipment in the first place. Vessels and primary controls should be designed and tested to assure safe operation. The testing program is an integral part not only of the basic system but of the safety system, too.

Qualities of safety system equipment design should include the following:

1. *It should be fail-safe.* When something goes wrong, it should leave the entire system in a condition that will not cause further harm.

2. *It should be very difficult to override the safety system.* When the system is locked out of service (i.e., unable to automatically operate) the locked out condition should be very obvious. Sometimes it is necessary to put the system out of service for maintenance or start-up. At that time special care should be exercised to alert all personnel. Alternate systems or procedures should be used to take the place of the disabled primary system. This may mean having someone standing by continuously to close hand valves, if needed. All disabled systems should be flagged so that the condition is obvious, or an interlock should be used to make it difficult to leave the location operational even though the safety system is locked out of service.

3. *The sensors should measure conditions as directly as possible to insure that malfunctions are detected.* If possible, the condition should be detected before the first failure can cause another failure. For example, if pressure is rising in a vessel, the well should be shut in before rising pressure can cause a vessel to explode. Then, if it does explode, the vessel failure must not prevent full closure of the safety valve. Thus, continued leaking of oil and gas will be stopped.

4. *It should be a system that will attain the safe condition if any part of it fails.* It should not be necessary to add energy to the system to cause the safety system to work. When this outside source of energy is needed most, it is usually least dependable. Valves that must be powered to close, such as electrically operated valves and ball valves, fall into this category. Ball valves can be made fail-safe with the addition of continuously charged accumulators, and electrically powered valves can be provided with auxiliary batteries. But the reliability is not nearly so good as with equipment that is inherently fail-safe when the energy is removed.

5. *It should be rugged.* This is especially true of wellhead equipment. When worst case situations occur (fire, collision, explosion, etc.), the wellhead becomes the final barrier to complete catastrophe. Often the wellhead sustains the impact of heavy equipment being dropped on it when catastrophes occur. For this reason, too, the shutoff valve should be as close to the formation as possible. This is the main reason for the use of subsurface safety valves and for locating surface safety valves in the second master valve in the tree. Subsurface safety valves are placed below the mud line where they are protected from fire and collision. When properly installed, even complete loss of the wellhead will not cause pollution.

6. *The safety system should survive as long as possible.* Failure of the energy source should not allow the safety valve to drift slowly closed. The safety valve should be fully open or fully closed, and should react quickly. Thus, if there is failure of the supply due to freeze-up or exhaustion of limited supply (nitrogen bottles or batteries), the system should sense the condition and shut in before the valve begins to drift closed.

7. *It should be simple.* This philosophy should be overridden only where there is operational necessity. Reliability worsens rapidly as the number of components increases. The problem is both physical and mental. More components provide more places for failure. More components also make the system more difficult to understand.

The exception is redundancy. Parallel systems of different types that do the same thing will help insure that if one system fails the other will work. Being different, the second system will not have the same inherent weaknesses.

In fact, it is recommended that redundant systems be used. There should be a primary and a secondary system. The primary system should be the most sensitive and reliable. The secondary system may be less desirable, as long as it is adequate.

An example would be the rupture prevention of a vessel. The primary system would be a high pressure sensing pilot which would shut off the pressure source. The secondary system would be a relief valve and/or rupture disc.

A less desirable secondary system, or perhaps the third level system, might be a low-pressure sensing pilot that would shut off the pressure source after the vessel has ruptured.

In general, the purpose of safety systems is to prevent structural failure and the release of hydrocarbons. More specifically, the purpose is to:

- Prevent undesirable events that could lead to a release of hydrocarbons. It is better to stop a chain of bad events in the earliest stage.
- Shut in the process or affected part of the process to stop the flow of hydrocarbons to a leak or overflow. If you cannot prevent a failure, at least minimize it.
- Accumulate and recover hydrocarbon liquids, disperse gases that escape from the process, and prevent further danger of fire and pollution. This is not a part of the shutdown system, but is a part of the total safety system.
- Prevent ignition of released hydrocarbons.
- Shut in the process in the event of a fire to prevent adding fuel to the fire.

2

History of Safety Valves

Subsurface

During the early 1930's, a demand developed for a downhole valve that would permit flow during normal conditions but would shut in the well in case of damage to—or destruction of—the wellhead. This valve would be installed downhole in the production string.

Such a valve was developed, initiating oil and gas well emergency shutdown systems. Compared with today's valves, this simple, poppet type valve (Fig. 2.1) had several disadvantages—restricted flow area, tortuous flow paths, low differential pressure rating, calibration difficulties, etc. But it worked.

From this beginning, subsurface flow-controlled safety valves have been going through an evolution that continues today. The changes include:

1. Improved closures (balls and flappers)
2. Improved flow paths to prevent flow cutting
3. Improved features to allow accurate calibration
4. Improved pressure rating and corrosion resistance
5. Improved means of reopening and maintenance

Along with valve improvements, improved well data gathering and calculation capabilities have provided a big step forward in calibrating the valve accurately. The API offers computer programs that provide reasonably accurate settings for a wide range of valves. The API also has established guidelines for testing, maintaining, and rating valves for various applications such as sand or sour service.

Additional requirements have been established to promote the quality of the valves and the qualifications of the specialists who service them.

Even with these improvements, subsurface controlled subsurface

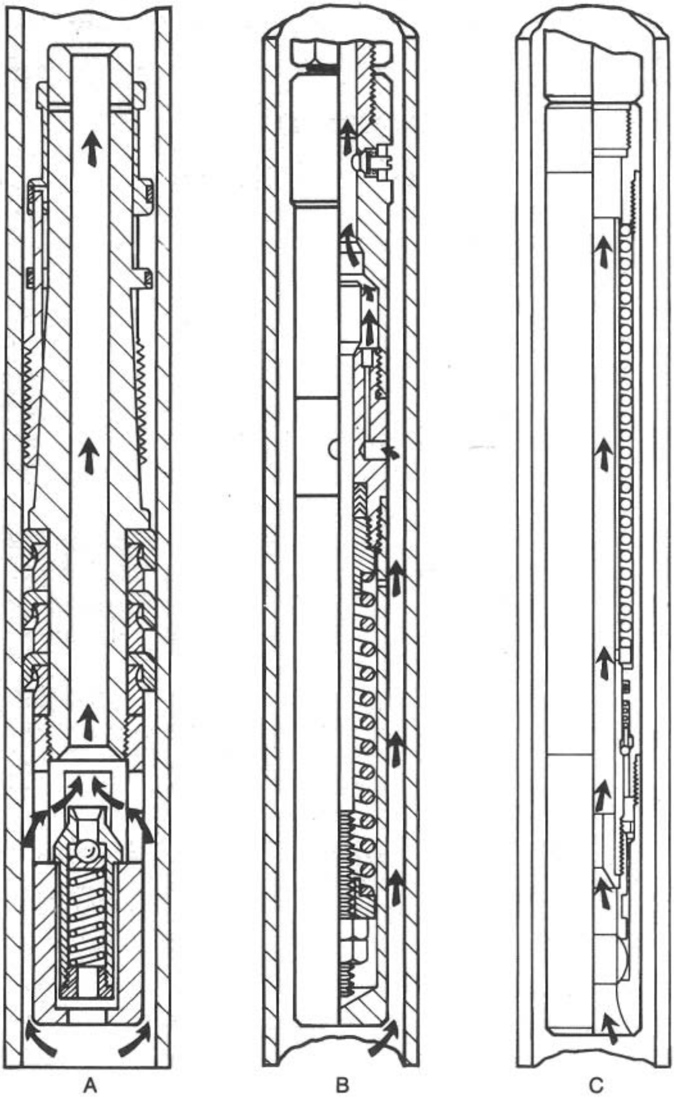

A First downhole safety valve

B Intermediate differential pressure operated safety valve

C Modern differential pressure operated safety valve

Fig. 2.1 *Early subsurface safety valves* safety valve sales began decreasing in the middle 1970's because of the inherent shortcomings of such a valve. All direct (or rate of flow) operating valves depend either on an increased flow rate or on a reduction in pressure at the valve to cause closure. A complete loss of surface controls usually allows one or the other of these situations to develop.

However, other situations can prevent the valve from closing:

1. Depletion of the formation after the valve is calibrated and installed, so that the flow rate may never reach the calibrated closing rate.
2. Partial blockage of the formation or tubing by sand or paraffin above the valve. This may restrict the flow rate through the valve so that it will not reach its calibrated closing rate.
3. Poor or insufficient well data causes the calibration to be incorrect so the well may never reach the calibrated flow rate.
4. Damaged surface controls that cause the flow rate to stay below the calibrated closing rate of the valve.

To overcome these disadvantages, a surface controlled subsurface safety valve was developed in the late 1950's. The design provided a large flow area, remote control of opening and closing, and responsiveness to a wide variation of abnormal conditions (fire, line rupture, etc.).

Because of the higher cost and the proration of United States' production, there was no immediate demand for this valve inside the U.S. Therefore, its use climbed at a relatively slow rate until the late 1960's when the advantages of such a valve over the direct controlled valve became important to domestic producers. The rapid increase in use since that time has been phenomenal (Fig. 2.3).

The widespread acceptance of the surface controlled subsurface safety valve had an important effect on platform safety. Since the valve is held open by hydraulic pressure, it lends itself uniquely to automated actuation in a manner that flow operated valves cannot.

It opened the way to the sophisticated emergency shutdown systems required today.

The versatility of this type of valve allows its use in many specialized applications, as well as for conventional safety valve purposes:

Deep applications—In wells located in deep water or permafrost, quite often two control lines are used, one to balance the hydrostatic pressure in the other.

Subsea test tree—In production testing from offshore floating vessels, a master valve in the BOP stack is desirable for safety reasons.

Some artificially lifted wells—Subsurface safety valves are required. They may be operated by hydraulic or electric pump pressure or by gas lift pressure.

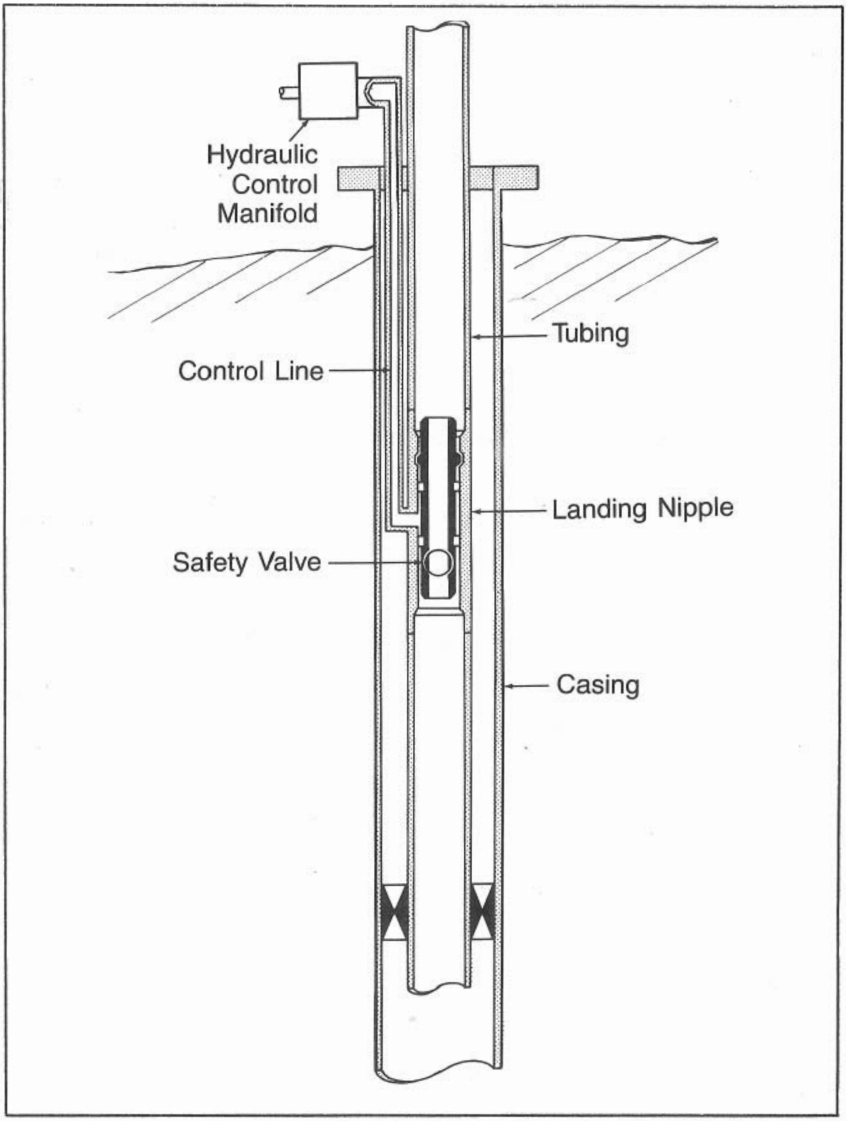

Fig. 2.2 *Surface controlled subsurface safety valve (SCSSV)*

Surface

In the early 1940's, the trend toward producing gas and oil wells from deeper zones, with subsequent higher shut-in wellhead pressure, continued. These wells, because of their high flowing potentials, were equipped with automatic shutoff devices on the surface.

Technology at that time was limited to flow line devices and/or wing valve installations. These were not through-conduit designs, and used only direct sensing systems (Fig. 2.4). This type installation did not allow for remote sensing. Many problems were encountered with the erosive action of sand and the troublesome hydrates formed in the restricted flow pattern.

As the industry trend of producing at higher flowing pressures and volumes continued, it became apparent that a more dependable and versatile automatic device was needed. In the late 1940's, the automatic gate valve/actuator combination (Fig. 2.5) was developed and applied.

This was a great improvement, because the design not only allowed for a through-conduit (full opening shutoff device) but, of greater significance, this device could be installed at any point in the flow stream in the vertical run of the wellhead, at the wing valve, or on the flow line. Also, large sizes could be made available for pipeline protection.

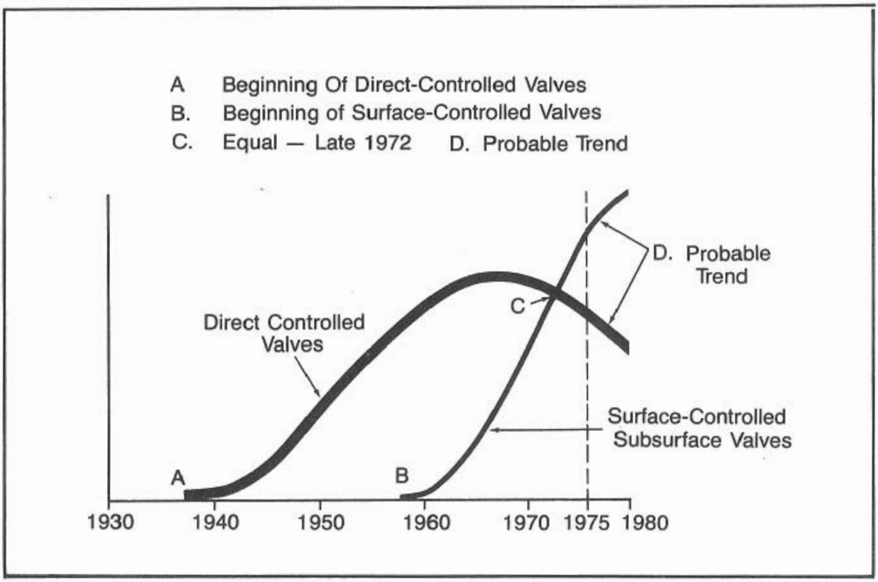

Fig. 2.3 *Direct controlled vs. surface controlled subsurface safety valve usage chart*

Another advancement was the pilot and monitoring system that was developed to offer remote point protection. This allowed placing a pilot on a flow line, heater, or separator so the safety valve could be actuated to shut off full well pressure upstream of the choke should there be a malfunction in the production stream.

Because of increasing offshore activity in the 1950's, gate valve/actuator combinations became widely accepted. They were basically fail-close pressure actuated piston/cylinders on gate valves, installed as secondary master valves in the wellhead assembly and controlled remotely from downstream of the production choke. These early actuators depended entirely on well pressure for closure and were not completely fail-safe.

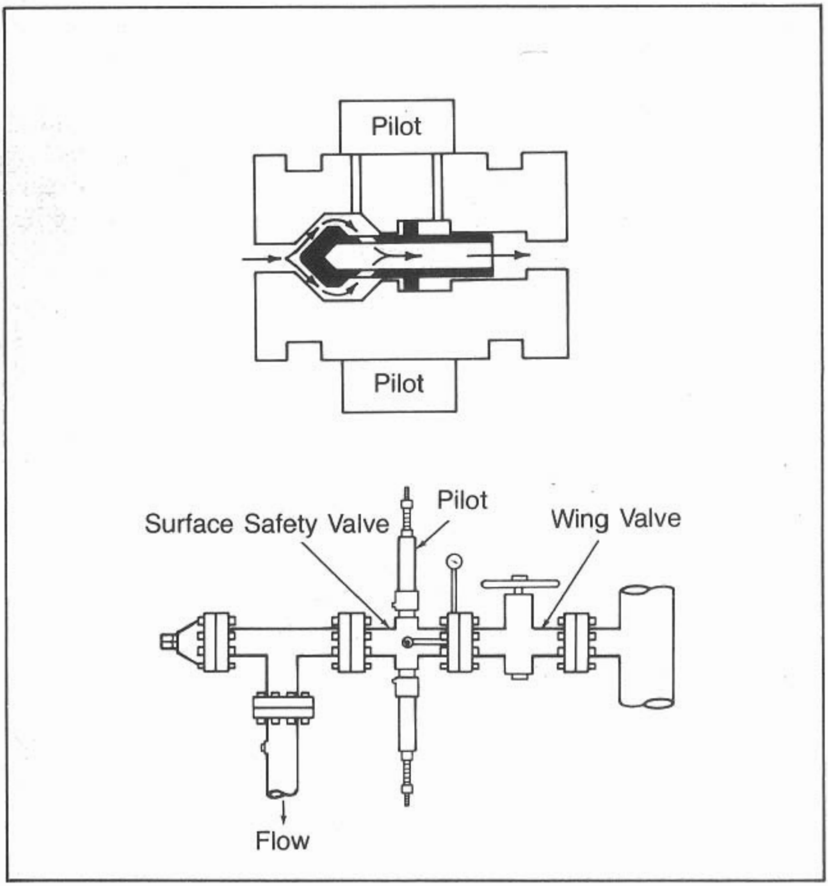

Fig. 2.4 *Direct sensing surface safety valve*

In the late 1950's, components were developed that improved the overall effectiveness of the safety systems. Fusible devices were designed to melt at specific temperatures and close the surface safety valve in the event of fire. Low pressure supply systems (50 psi) integrated liquid level monitoring and remote electric shut-in capabilities using solenoid valves.

It was during this period that the basic shut-in system was developed (individual well surface shut-in due to a production malfunction). Also developed were systems for total surface safety valve shut in of all wells from such points as the heliports, boat landings, escape exits, etc.

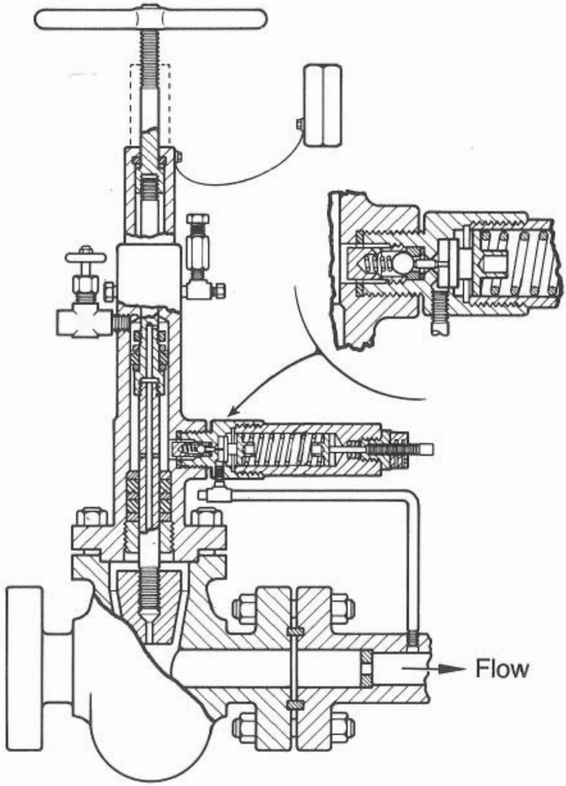

Fig. 2.5 *Early gate valve/actuator combination*

Another development allowed all contained volume on a separator platform to be "flared" to minimize a possible fire hazard.

During the 1960's the pneumatically operated, fail-close surface safety valve was developed. This valve allowed all systems to "fail-safe". Upon loss of control pressure all devices on wellheads were designed to move to the closed position. Various pilots were installed to monitor the flowing conditions and remotely close the actuators in the wellhead. These actuators exhausted no well fluids in the atmosphere and were more dependable, safer, more economical, and simpler in design.

Because no well fluids were exhausted into the atmosphere, producers could protect their installation when producing hydrogen sulfide, carbon dioxide, and other dangerous compounds.

More advanced components soon were added to safety systems. For example, "first-out" indicators were added to allow maintenance personnel to pinpoint malfunction. This was especially advantageous on

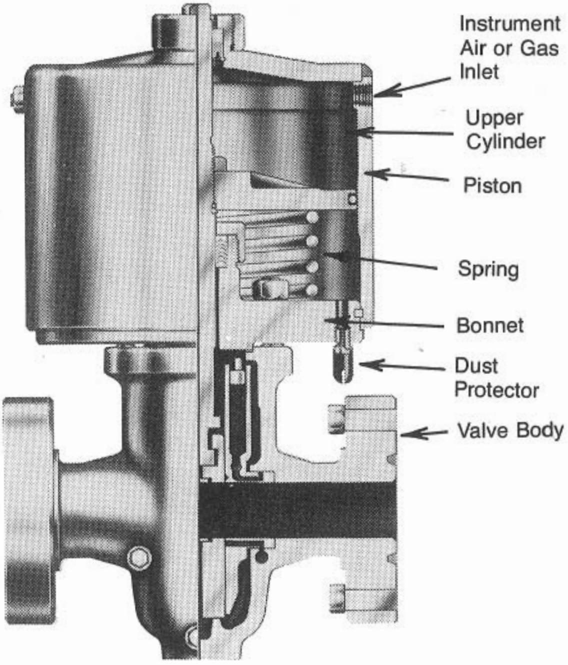

Fig. 2.6 *Fail-closed surface safety valve*

large, complex installations where high pressure gas and oil was being processed. Additionally, surface safety valves were incorporated into "solid block" wellheads which were becoming more popular.

It was at this stage that unfortunate circumstances in offshore development in the United States aroused public attention which, in turn, encouraged governmental guidance. As a result, Outer Continental Shelf (OCS) orders were proposed in 1969 setting forth guidelines for the governing of oil, gas, and sulphur leases in the Outer Continental Shelf, Gulf of Mexico area (specifically OCS No. 5 for downhole devices, OCS No. 8 for wellheads, and OCS No. 9 for pipelines).

The OCS orders required producers to install the necessary devices to comply, and a very significant tool (which was being used in overseas areas) became widely accepted on a domestic level. It was the surface controlled subsurface safety valve (Fig. 2.7), or SCSSV (OCS Order No. 5).

Because of its features, this device offered improved protection during the entire life of the well. With the downhole devices, the surface control units necessary to operate the surface controlled subsurface safety valve evolved.

Surface control manifolds and monitors

Because of the many different applications, control manifolds were made available to control single wells, multiple wells, multiple wells using individual control, multiple wells using individual pressures, and any combination of these (Fig. 2.8).

Following are some of the many special features incorporated into these manifolds:

1. Sequential closing—surface safety valve first, downhole safety valve second.
2. Sequential reopening—downhole safety valve first, surface safety valve second.
3. Individual well control—one well shut in as a response to a certain condition.
4. Hydraulic isolators—protect the reservoir from well backflow.
5. Hydraulic pump shutdown—when oil level in reservoir is low.
6. Low pressure monitor—on each oil line to activate only the surface controlled subsurface safety valve on that oil line should a break occur.
7. Indicators—monitor signal pressures from pilot signals, oil pressures, etc.

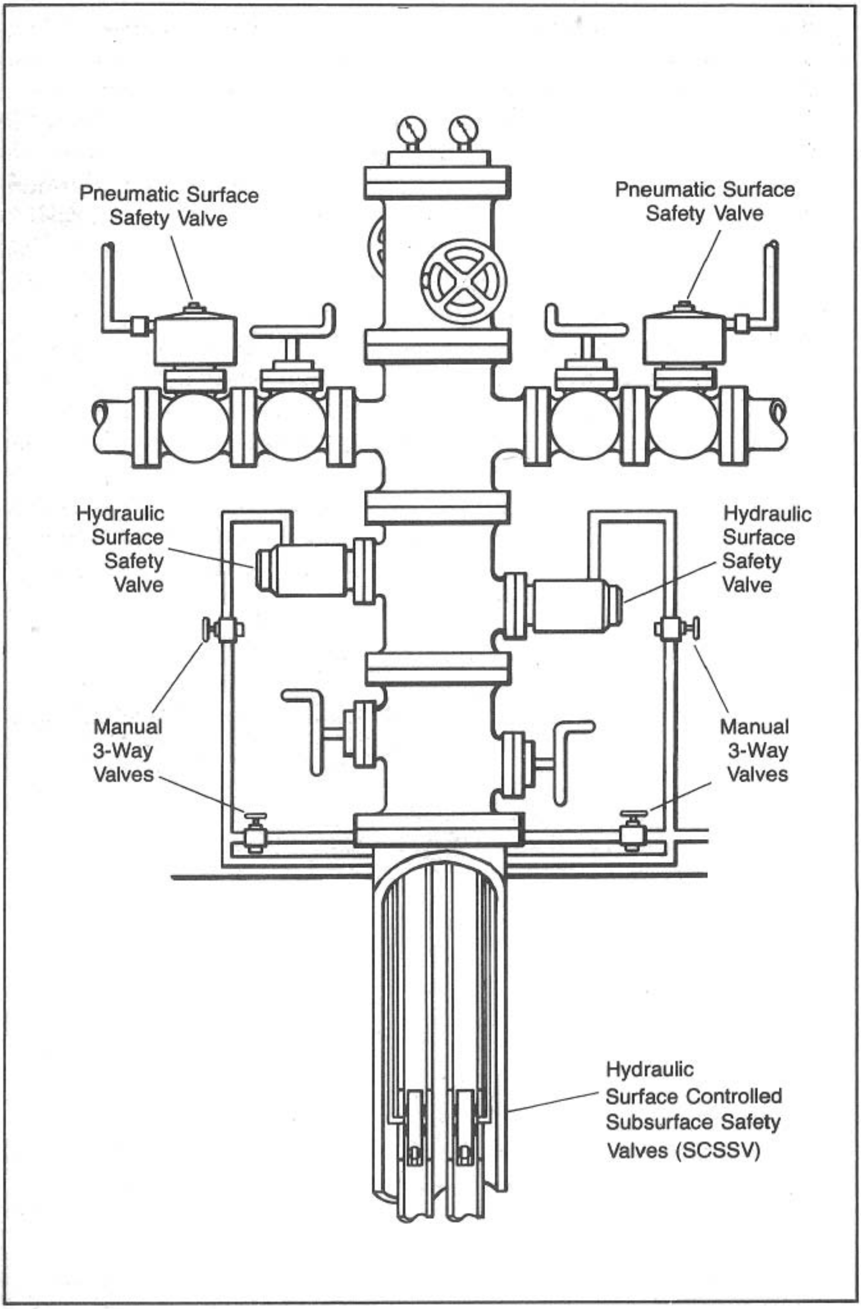

Fig. 2.7 *Solid block wellhead with safety valves*

8. Inter-locking systems—certain conditions have to be "satisfied" before a particular signal can be relayed for proper reaction.

9. Hydraulic pressure—provided by pneumatically powered hydraulic pumps, electric driven motor pumps, engine driven pumps, or combinations of these.

Corresponding improvements have been made in monitoring systems. Special features include:

- Fusible lock out cap enables the actuator to be "locked" open but retain the capability to close if high temperature melts the cap. An example could be during normal wireline operations if a surface safety valve is installed in the vertical run of the wellhead.
- Sand erosion probe is installed on a flow line in order to monitor a sand flow condition. When sand flow erodes the probe, a signal is created to send an alarm or to close the surface safety valve. This indicates that the flow lines, especially at turns, should be examined for sand erosion.
- Relays interface in the installation in order to instrument the monitors with the surface safety valves. These relays may have either manual or automatic reset capability.
- Quick exhaust valves allow rapid full-flow exhausting of control pressure to speed up a reaction or closure. They are normally installed near a surface safety valve.

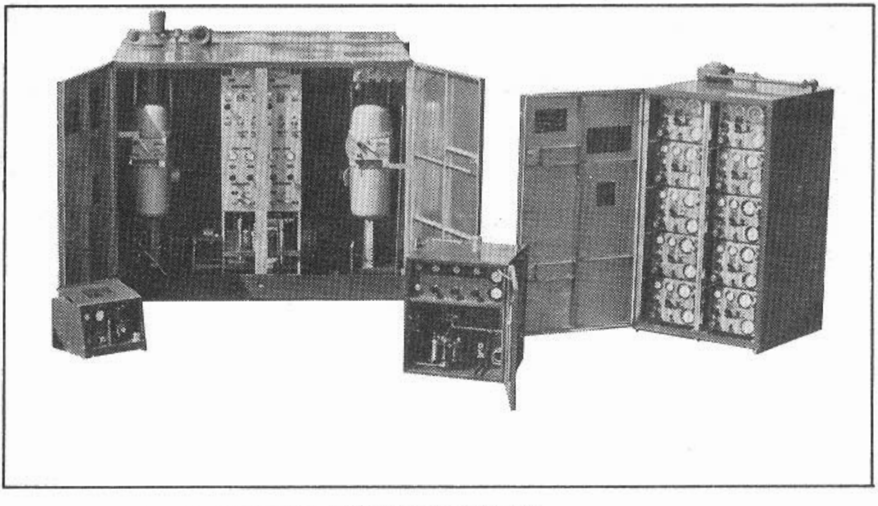

Fig. 2.8 *Variety of single and multi-pump manifolds*

Safety systems and their related components have been discussed for downhole and wellhead applications. An important related phase of these systems is the surface safety valve as applied to pipelines, trunk lines, and transmission lines (OCS No. 9). There are many gathering stations which do not contain any "producing" wells but serve only as a central separation facility to process the flow medium. Many of the same monitoring components are used in conjunction with the fail-safe actuator/gate valve combinations.

These designs do not depend solely on spring closure. They are "spring assist" type designs. Even if the spring should fail (break), force created by the pressure in the valve body acting on the stem area would close the device.

An installation using a valve in place with monitor pilot is shown in Fig. 2.9.

For large gas lines where a pressure responsive monitor device may not afford the protection desired, there is a monitor that will respond to a "pressure loss rate" beyond the normal.

For example, with this type monitor, a gas pipeline pressure could vary widely in any given time period, leaving the pilot unaffected. However, should the pipeline pressure be decreased rapidly (as would occur in case of a line rupture), the monitor would signal to close the surface safety valve. This device is pneumatic or electro-pneumatic, and is especially useful in safety systems for storage wells and pipelines.

The simplest safety system for pipelines, of course, is the direct sensing actuator/gate valve combination which requires no external supply system (Fig. 2.10).

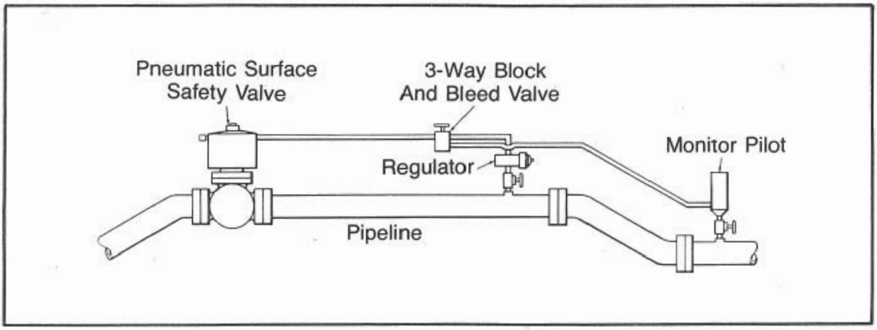

Fig. 2.9 *Pipeline safety valve, remote sensing*

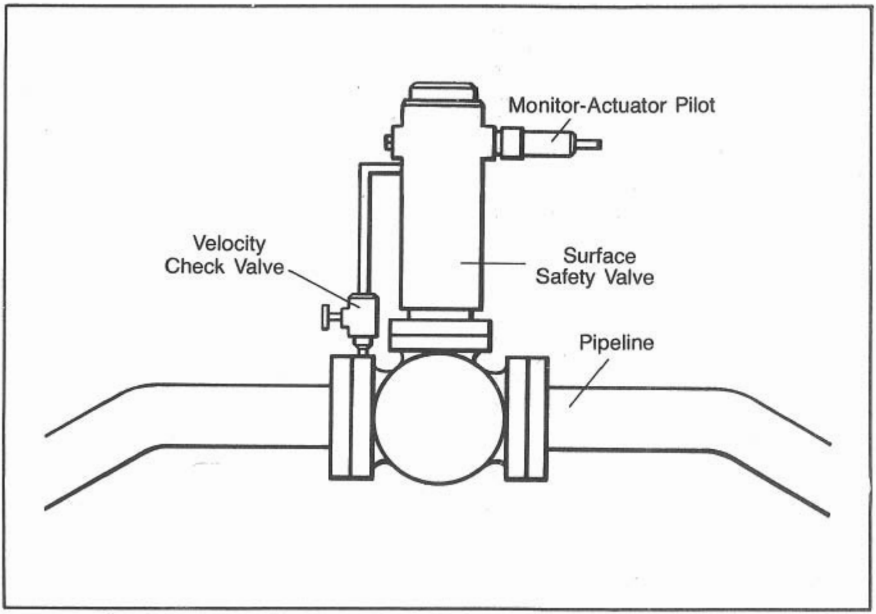

Fig. 2.10 *Direct controlled pipeline safety valve*

3

Regulations, Standards

This book is restricted to the basic shut-in safety systems for oil and gas wells and offshore platforms, but other parts of the total system are covered in a broad general manner.

Anyone responsible for the total production system needs to study other publications, including government codes and regulations; industry codes, standards, and recommended practices; and manufacturers' catalogs and technical information about the equipment.

Government regulations

There seems to be no end to the involvement of government in the petroleum industry. Local, state, and federal agencies control various facets of the industry. Some of the control is fiscal, some administrative, and some operational.

The most pertinent of these to the persons concerned with safety systems is the operational control. Agencies have written laws that cover:

A. Navigational safety—The Coast Guard is the agency most concerned with the procedures and equipment in navigable waters.

B. Environmental protection—Offshore, the United States Geological Survey (USGS) has primary responsibility for control. On inland waters and land, responsibility is vested in the Environmental Protection Agency (EPA) of the federal government and/or the state.

Their concern is not only for discharges of hydrocarbons, but for all discharges that are considered pollution. Sometimes the state petroleum industry regulatory body, such as the Texas Railroad Commission, writes laws to govern control of pollution.

C. Safety—Like pollution, safety is regulated by many agencies. The Coast Guard and USGS have primary control offshore. Onshore the Occupational Safety and Health Administration (OSHA), Department of Transportation (pipeline), Interstate Commerce Commission, and state regulatory bodies, and the general liability all exercise control.

Offshore controls

The strictest controls are, in general, on offshore operations. These primarily are covered in the following publications which govern offshore operations:

A. Code of Federal Regulations

1. Title 30, Part 250—Oil and Gas Sulphur Operations in the Outer Continental Shelf
2. Title 33, Chapter I, Subpart N—Artificial Islands and Fixed Structures on the Outer Continental Shelf
3. Title 40, Chapter I, Subchapter D, Part 112—Oil Pollution Prevention
4. Title 49, Part 192—Transportation of Natural and Other Gas by Pipeline: Minimum Federal Safety Standards
5. Title 49, Part 195—Transportation of Liquids by Pipeline

B. Notice to Lessees and Operators of Federal Oil, Gas and Sulphur Leases in the Outer Continental Shelf, OCS Orders Nos. 1 through 14. Of these 14 orders, the most important to the safety systems are Order Nos. 5, 8 and 9. There are separate sets of orders for the Gulf of Mexico, Pacific, Mid-Atlantic, and Alaskan areas. As would be expected, they are very similar.

These orders are published by the U.S. Department of the Interior, Geological Survey Division (USGS) and are the laws that the producing companies must follow. Industry codes and standards are referenced in the orders and by that authority become mandatory, although they are not by themselves enforceable.

The OCS Orders are written by the USGS. They follow good practices as reflected by API and other industry standards. There is a lot of input by various industry groups, but the government has the final word.

The testing and record-keeping requirements—especially the record-keeping—are expanded greatly beyond the normal industry practice. The 14 different orders cover various aspects of operations in the OCS areas. Some aspects of the safety system requirements are:

1. Order No. 5, Subsurface Safety Devices, requires the use of a subsurface safety valve, or a plug, 100 ft or more below the ocean floor for any oil or gas well that can flow. The 1976 edition began requiring compliance to the requirements of API Spec. 14-A and API RP 14-B which cover subsurface safety valves and their use. Order No. 5 recognizes the superiority of surface controlled subsurface safety valves over direct controlled (subsurface controlled subsurface) safety valves only until the well is worked over and the tubing is replaced.

If the pressure is more than 4,000 psi and a suitable surface controlled valve is not available, a subsurface, or direct controlled, valve may be used. Tests must be run every six months or less. Maximum leakage rates of 400 cc/min liquid or 15 cu ft/min are permitted. It specifies that the control system be integrated into the platform safety system.

2. In Order No. 8, platforms and structures are required to be approved by an appropriate registered professional engineer and the USGS. The platforms must have a specified variety of safety and antipollution equipment. The requirements are basically those recommended in API RP 14-C. The recommended practice (RP) is cited in later editions as the minimum requirement.

Of course, if the Order is more stringent than the API document, the Order requirement prevails. Some of the more pertinent requirements of the safety system are:

- High pressure sensors on pressure vessels must activate below the relief valve setting. Earlier editions set this at 5% below, but later versions give no number. It is just required to actuate before the relief valve starts relieving.

Keep in mind that the sensor setting must take into account both the non-repeatability spread of both the sensor and the relief valve, and the time delay between when the sensor recognizes the alarm condition and when the shut-in valve is fully closed (Fig. 3.1). Non-repeatability spread is that range of pressures in which a device will actuate at any one setting. This problem is most applicable to moving seal sensors.

- Low pressure sensors shall activate at no lower a pressure than 15% below the minimum operating pressure of the vessel, or 5 psi if the minimum pressure is less than 33 psi (10% is specified in some

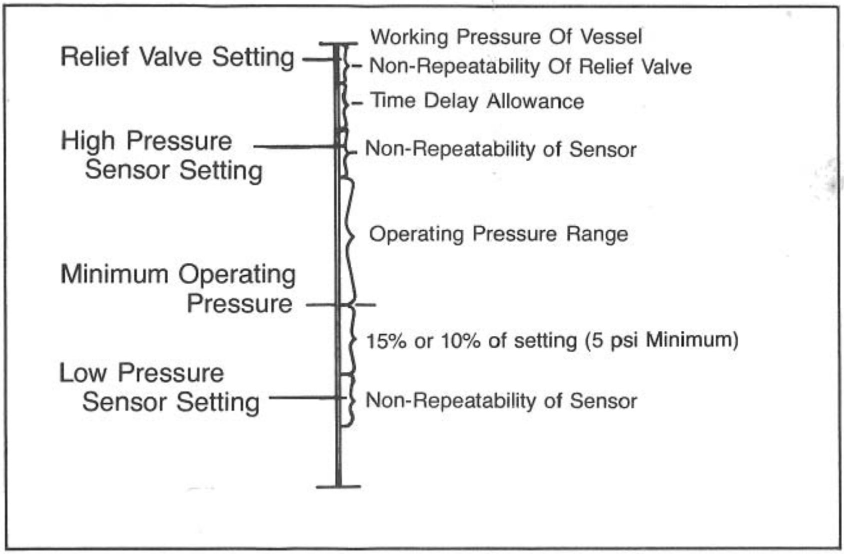

Fig. 3.1 *Sensor setting considerations*

editions). The purpose of the low pressure sensor is to detect rupture or gross leakage and prevent a bad situation from getting worse. Care must be taken in selecting the minimum operating pressure. If it is too high, there will be an excessive number of false shut-ins. If too low, the protection will be lost. Reference must be made to the latest applicable edition in order to be sure.

- Separators shall have high and low pressure sensors; low level sensors; relief valves; and, where it can discharge to a flare, there is to be a high level control.
- Pressure surge tanks shall have high and low pressure sensors, high level control, flare line, and relief valve.
- Atmospheric surge tanks shall be equipped with a high level shut-in sensor.
- All other hydrocarbon handling pressure vessels shall be equipped with high-low pressure shut-in sensors, high-low level shut-in controls, and relief valves, unless they are protected in some other way.
- Pressure sensors and relief valves must be fitted for testing with an outside pressure source.
- Wellheads must have automatic fail-close valves. If these safety valves are temporarily out of service, they must be flagged.

- High-low sensors must be on flow lines downstream of the choke. If more than 10 ft of flow line is ahead of the primary choke, there needs to be a low pressure sensor, too.
- Flow lines to and through headers and separators must be able to handle well pressure if there is a block valve downstream that could cause that portion of the piping system to be subjected to the well pressure. Otherwise there must be a relief valve for the flow lines.
- Headers must have check valves on each of the incoming flow lines to prevent back flow in case one of the flow lines ruptures.
- Fusible heat sensors shall be on all control lines at "strategic" points. Order No. 8 does not state what points are strategic, but API 14-C recommends some places.
- Remote shut-in controls (emergency shutdown, ESD, "panic button", "chicken switch") must be at the helicopter deck, exit stairway landings, and boat landings. These controls must be quick opening valves, except at the boat landings. There the valve may consist of a loop of plastic tubing control line so that it can be pulled apart with a boat hook.
- Compressors shall be protected by safety shut-in valves on the input (suction and fuel). They shall have sensors for high and low pressure, and for high temperature. There shall be relief valves, too.
- A testing schedule is required for the safety shut-in equipment and system. Initially, and thereafter semi-annually, the entire system test is to be witnessed by the USGS. The component test schedules are set at a relatively short period between tests until the component has a history of good reliability. The periods then are extended as long as the particular device proves itself dependable. One malfunction puts it back on the old, more frequent, schedule. Results of tests are recorded.

3. Order No. 9, Oil and Gas Pipelines, requires various types of protection. Pipelines leaving platforms must have safety shut-in valves. The production pipeline coming into the platform must have safety shut-in valves whether the production is from wells on the platform, from a pipeline coming into the platform from satellite wells, or from other platforms.

The shut-in valves are to be controlled by pressure sensors and manual valves (ESD). Pipelines coming into the platform must have check valves to prevent back flow from the platform in case the pipeline ruptures.

Industry codes, standards, and recommended practices

They have been developed by numerous organizations. These codes and standards are generally consensus documents. They are written by committees of some of the most knowledgeable people from interested companies in the industry. These documents contain a wealth of technology on what is good and common practice. They are written as concisely and non-commercially as possible, but often without explanation of why things are done that way.

Since they tell the agreed-upon way, they have substantial acceptance by government and industry. Most equipment is designed to some extent to conform to at least one of these documents. Most of the documents cite other such codes and standards; so, some apparently simple specification may actually be very complex.

Some of the more important documents of the more influential organizations are discussed here. Refer to these documents for bibliographies of the many more that are available.

A. American National Standards Institute (ANSI) is the publishing organization for standards written by several other technical societies or associations such as the American Society of Mechanical Engineers (ASME) and the Institute of Electrical and Electronic Engineers (IEEE). ANSI originally was called the American Standards Association (ASA), but when the U.S. government chose to use it as the official industry standards organization to represent the United States in the International Standards Organization (ISO), it was renamed the United States of America Standards Institute (USAS), and later, ANSI.

1. ANSI B16.5, Steel Pipe Flanges, Flanged Valves and Fittings, is one of the more useful documents for valve and flange dimension information. It is also the source for pressure rating information for non-wellhead equipment. Significant changes have been made in the working pressures for the various pressure ratings. Flanges and fittings are made dimensionally different for different pressure ratings.

These ratings were established years ago by the steam power industry, the first organized industry that needed high performance valves and fittings. Consequently the pressure ratings and fitting geometry were based on the strength of carbon steel at about 650 °F. Thus an ANSI Class 600 flange had a working pressure of 600 psi at 650 °F. At "room" temperature, −20 °F to +100 °F, the working pressure was 1,440 psi. The 1973 revision changed the pressure ratings to be different according to the actual strength of the materials used to make the equipment.

The different materials, all steel, were put into 23 groups. Pressure ratings were based on those groups. The same Class 600 flange may have a cold working pressure of 1,030; 1,175; 1,235; 1,390; 1,480; or 1,500 psi, depending upon which steel was used for its manufacture. One should be aware also that the flange may be supplied with a raised face for use with a flat gasket or with a groove for use with a ring gasket.

Wellhead equipment is furnished with ring joint flanges only, but process equipment may be furnished with either. The sealing systems are not compatible.

The most common pressure ranges for safety system equipment are Classes 600, 900, and 1500. Flanges of these ranges are dimensionally identical to the API 2000, 3000, and 5000 psi flanges, but their materials differ.

2. ANSI publishes several standards on piping (B31.3, B31.4, and B31.8), and graphical symbols (Y32.11 and Y32.2.3) that are useful in design.

B. American Petroleum Institute (API) is the primary standards writing organization for the petroleum industry. It covers everything from exploration through marketing. Safety shut-in equipment is applicable for the production, transportation, and processing segments.

In the last decade the liability laws of the nation have changed very rapidly and the population has become very environment conscious. The Santa Barbara oil spill, followed by two fires in the Gulf of Mexico, caused the federal government to take a very serious interest in the pollution problems of offshore operations. API responded to this interest by writing a new series of specifications and recommended practices that embodied a new philosophy.

Instead of just specifying dimensional type standards, the 14 series had a new emphasis on performance, qualification, and documentation. Much of the philosophy was fostered by a report prepared for the USGS by a task group from the NASA Manned Spacecraft Center in Houston.

1. API Spec. 14-A, Specification for Subsurface Safety Valves, covers design and performance requirements, certification, and documentation requirements for downhole valves.

2. API RP 14-B, Recommended Practice for Design, Installation, and Operation of Subsurface Safety Valve Systems, covers the use of the valves described in 14-A.

3. API RP 14-C, Recommended Practice for Analysis, Design, Installation and Testing of Basic Surface Safety Systems on Offshore Production Platforms, tells what to sense and what to control as far as the surface safety system is concerned. It does not consider the downhole safety valves nor the interfacing between the downhole safety valves and the surface safety system, nor does it consider the interfacing with the telemetering systems. It is a good and comprehensive guide in system design, within its scope.

Many of OCS Order No. 8 requirements are recommended in the 14-C document. Indeed the entire RP is cited as a requirement in later editions of Order No. 8.

4. API Spec 14-D, Specification for Wellhead Surface Safety Valves for Offshore Service, was written with requirements for certification, documentation, and performance verification similar to those of 14-A. It also recognized that the most prevalent safety valves consist of valves and actuators that are often made by different manufacturers.

There are separate requirements for the valve, actuator, and combined assembly. The performance testing requirements apply only to the sealing function of the valve, but they require that the valve be tested with an actuator.

5. API RP 14-E, Recommended Practice for Design and Installation of Offshore Production Platform Piping Systems, is concerned with the flow and strength calculations involved in the engineering design of piping systems.

6. API Spec. 6-A, Specification for Wellhead Equipment, contains the dimensions for flanges, valves, and other such components. It specifies the materials, test procedures, and pressure ranges.

Flange designs for the 2,000, 3,000, and 5,000 psi working pressures were copied from the ANSI 600, 900, and 1500 Class ring joint flanges. These originally had the same number designations but were referred to as "900 series" or "1500 series."

To withstand the higher pressures, API steel had to have a higher yield strength of 60,000 psi instead of the ANSI requirement for about 35,000 psi. These were referred to as 6-B valves and flanges. They were designed so that the compressive sealing stress would result from the bolting bearing load being supported by the ring gasket.

In the 1950's the Association of Wellhead Equipment Manufacturers (AWHEM) developed a new series of flanges for 10,000 and 15,000 psi that would be more efficient than the old 2900 Series API design. The new 6BX flanges used pressure-energized ring gaskets and the bearing loads were absorbed by a raised face on the flange inside the bolting.

7. API Spec. 6-D, Specification for Pipeline Valves, is similar to 6-A except that it covers valves only.

The pipeline industry is very close to the pressure vessel and piping industry and ANSI in design and construction practices. They do not handle the high pressures nor need the ruggedness that wellhead equipment needs. They are oriented toward a lot of fabrication welding, which curtails the use of the high strength steels used in wellhead equipment.

In general, the API recommended practices are well written educational books pertaining to the use and operation of oilfield installations and equipment.

C. American Society of Mechanical Engineers (ASME) publishes most of its standards through ANSI; however one of the most important standards documents is "The Code." The ASME Boiler and Pressure Vessel Code has 11 sections covering 22 different books. The most useful are Section I, Power Boilers; Section IV, Heating Boilers; Section VIII, Divisions 2 & 1 Pressure Vessels; and Section IX, Welding Qualifications.

D. National Association of Corrosion Engineers (NACE) has standard MR-01-75 for materials used in sulfide stress cracking environments. This standard is cited in API specifications. It was originally published as Specification 150, and later as Publication 1F166, a specification for valves for production and pipeline service. In 1976 the Texas Railroad Commission cited it in Rule 36 as applicable for all types of oilfield equipment. It then was rewritten to cover the broader application.

E. Other publishers of useful literature are:

1. American Society of Heating, Refrigeration and Air Conditioning Engineers (ASHRAE)
2. Factory Mutual Insurance Company
3. Fire Insurance Association
4. Institute of Electrical and Electronic Engineers (IEEE)
5. Instrument Society of America (ISA)
6. National Fire Protection Association (NFPA)
7. Manufacturers Standardization Society of the Valve and Fittings Industry (MSS)

4

Symbols And Definitions

Throughout this book there are diagrams to illustrate the concepts discussed in the text. The symbols used are a combination of the symbols used by various organizations because they best describe the concepts and specific function of the equipment.

In some special purpose valves or equipment there is no appropriate standard symbol. In most cases the specific function is described in one of the chapters. The symbols used by API RP 14-C are listed to provide a bridge between the API specification and this book.

API and other industry societies publications must not in any way be specific to any one manufacturer's equipment. This might leave a void that might inhibit understanding.

Some generic types of equipment, like check valves and relief valves, are built differently for process piping than for instrumentation piping. For this reason the symbols for the different applications are different.

Where possible, the Instrument Society of America (ISA) and/or the API designation is used (at least parenthetically) to provide a bridge in vocabulary. In general the more common name is used for easier reading.

Definitions and abbreviations

Actuated—Having performed its designed function.

Actuator—The portion of an assembly, usually a valve, which will power the device to perform its function.

AISI—American Iron and Steel Institute

ANSI—American National Standards Institute

API—American Petroleum Institute

ASME—American Society of Mechanical Engineers

ASTM—American Society for Testing and Materials

AWHEM—Association of Wellhead Equipment Manufacturers

Corrosion—Deterioration of a material by contact with its environment.

ESD—Emergency shut down. The part of a safety system that will command the system to stop all flow and place the installation in a most safe condition.

Failure—Improper performance of a device or equipment item that prevents completion of its design function (see malfunction).

Fire loop—A control line, usually pneumatic, containing temperature-sensing elements (fusible plugs, plastic or rubber tubing) which, when activated, will initiate shutdown. Usually a part of the ESD system.

Fired vessel—A vessel in which the temperature of a fluid is increased by an internal flame.

Flow line—Well stream piping between the wellhead and the first process component.

Flow line segment—A portion of a flow line operating at a different pressure than another portion of the same flow line.

Gas detection system—A monitor to detect combustible gas concentrations, and other dangerous gasses such as hydrogen sulfide. The system will initiate alarm or shut down when predetermined limits are exceeded.

High pressure/temperature level—Parameters that are higher than the normal operating limits. Hence, a high pressure pilot will actuate when the pressure it senses increases above preset limits.

Hydrate—Solution of water and other compounds. Problems occur when the freezing temperature of the solution is high enough that expansion cooling will cause freezing which will interfere with proper operation.

Indirect heated component—A vessel or heat exchanger used to increase a fluid temperature by heat transfer from another fluid (no flame in that vessel).

In service—The operational mode in which a safety device can automatically perform its function.

Leak—Unintentional escape of a fluid (liquid or gas) such as to atmosphere or sea.

Malfunction—Condition of a device or equipment that causes it to operate improperly, but does not prevent the performance of its designed function.

Monitor pilot—A sensor which alters a signal when the operating parameter that it senses changes beyond a predetermined limit. Normally, the signal energy level will be increased by an actuator pilot or relay.

Normally closed valve—A valve that automatically will shift to the closed position when a restraining force or energy source (pressure or electrical current) is removed. A threeway valve will shift to block the normal inlet and permit the using device (cylinder) to exhaust through the third port.

Normally open valve—A valve that will open when operating power is removed.

Outer Continental Shelf, OCS—The shallow area outside the limits of state jurisdiction; federally controlled waters.

Out of service (safety device)—An automatic device in the normal operating mode except that it is intentionally latched to be incapable of performing its designed function.

Override—An alternate power or control function which supersedes the normal function.

Pipeline—Piping between major installations, such as between lease and processing plant or between platforms.

Pilot—A sensor which initiates the signal that controls the system.

Pneumatic—Operated, controlled, or powered by gas (air, natural gas, etc); usually low pressure.

Reset—Returned to unactuated conditions; also, to change the adjustment.

Safety valve—An automatic valve for controlling flow or pressure to prevent an undesirable event, such as a normal control function failure, from causing injury to persons or property.

Sensor—A device for monitoring an operating parameter. It senses a condition.

Setting—An adjustment to a preselected value.

Shutdown valve—An automatic normally-closed valve used, for instance, to isolate process train or pipeline segments.

Stress corrosion cracking—Brittle cracking of a material (usually metal) caused by the combination of stress (usually tensile) and the environment. Two common types are chloride (sodium chloride) stress cracking and sulfide (hydrogen sulfide) stress cracking.

Subsurface safety valve, SSSV—A shut-in safety valve installed below the wellhead.

Subsurface controlled subsurface safety valve, SSCSSV—A SSSV with the sensing and control functions integral to the subsurface safety valve.

Surface controlled subsurface safety valve, SCSSV—A SSSV that is controlled by a signal from the surface, usually hydraulic pressure.

Surface safety valve, SSV—A shutdown valve for a safety system. API Spec. 14-D defines it as being used only on the wellhead. The same type equipment can be used anywhere in the production and pipeline system.

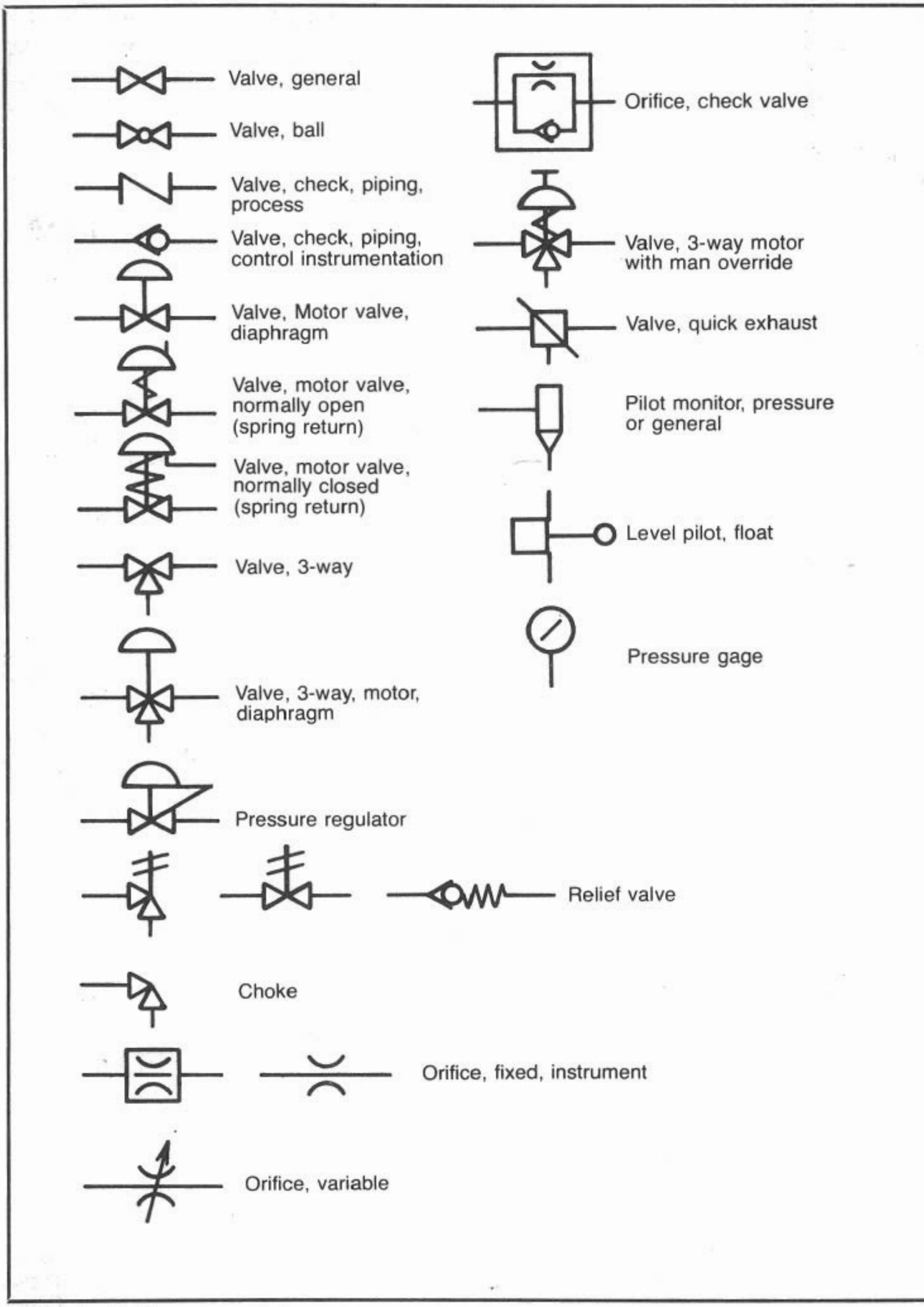

Fig. 4.1 *Equipment symbols*


Relay valve, bleed pilot

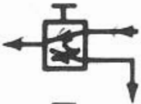
Relay valve, bleed pilot

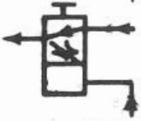
Relay Pilot, bleed pilot


Relay pilot, block & bleed pilot

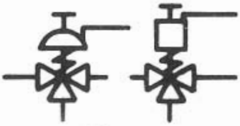
Relay, valve, block & bleed pilot, manual override


Solenoid valve, 2-way

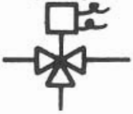
Solenoid valve, 3-way


Subsurface safety valve


Instrument or control circuit line, pneumatic.


Low press hyd.


High press hyd.


Filter

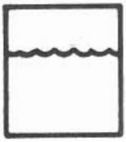
Tank or reservoir

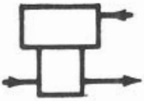
Pump, ratio piston

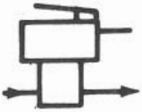
Pump, ratio piston, with manual override


Pump, hand


Meter Run, gas, orifice


Meter, oil, positive displacement


Accumulator

Tree, Christmas—An assembly of valves and fittings used for production control. It includes the tubing head top flange, bottom-most master valve, the crown valve (swabbing valve), the wellhead choke, and all components in between.

Valve, master—A valve that is placed in the vertical run of the tree in order to shut off well flow. It is not a swab (crown) valve.

Valve, wing—A Christmas tree valve for shutting off well flow. It is not in the vertical run.

Working pressure—The maximum internal pressure for which the equipment is designed.

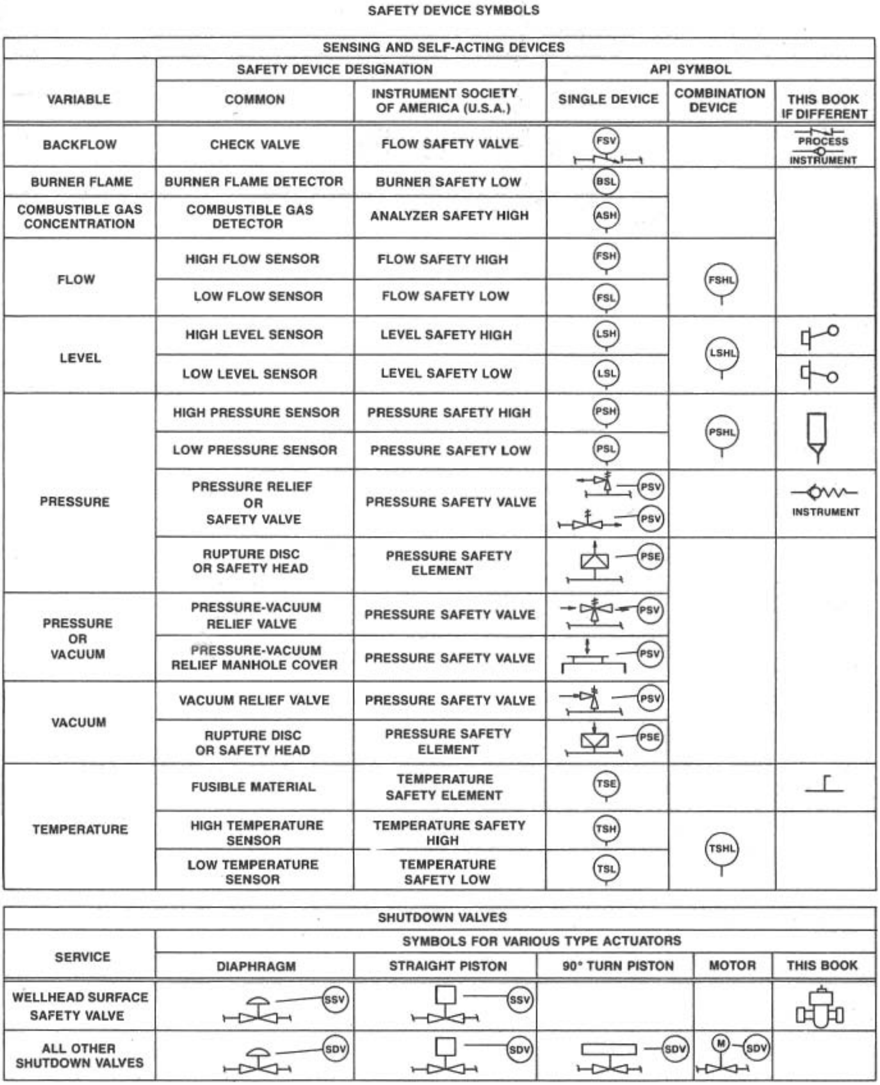

SAFETY DEVICE SYMBOLS

SENSING AND SELF-ACTING DEVICES					
	SAFETY DEVICE DESIGNATION		API SYMBOL		
VARIABLE	COMMON	INSTRUMENT SOCIETY OF AMERICA (U.S.A.)	SINGLE DEVICE	COMBINATION DEVICE	THIS BOOK IF DIFFERENT
BACKFLOW	CHECK VALVE	FLOW SAFETY VALVE	FSV		PROCESS INSTRUMENT
BURNER FLAME	BURNER FLAME DETECTOR	BURNER SAFETY LOW	BSL		
COMBUSTIBLE GAS CONCENTRATION	COMBUSTIBLE GAS DETECTOR	ANALYZER SAFETY HIGH	ASH		
FLOW	HIGH FLOW SENSOR	FLOW SAFETY HIGH	FSH	FSHL	
	LOW FLOW SENSOR	FLOW SAFETY LOW	FSL		
LEVEL	HIGH LEVEL SENSOR	LEVEL SAFETY HIGH	LSH	LSHL	
	LOW LEVEL SENSOR	LEVEL SAFETY LOW	LSL		
PRESSURE	HIGH PRESSURE SENSOR	PRESSURE SAFETY HIGH	PSH	PSHL	
	LOW PRESSURE SENSOR	PRESSURE SAFETY LOW	PSL		
	PRESSURE RELIEF OR SAFETY VALVE	PRESSURE SAFETY VALVE	PSV PSV		INSTRUMENT
	RUPTURE DISC OR SAFETY HEAD	PRESSURE SAFETY ELEMENT	PSE		
PRESSURE OR VACUUM	PRESSURE-VACUUM RELIEF VALVE	PRESSURE SAFETY VALVE	PSV		
	PRESSURE-VACUUM RELIEF MANHOLE COVER	PRESSURE SAFETY VALVE	PSV		
VACUUM	VACUUM RELIEF VALVE	PRESSURE SAFETY VALVE	PSV		
	RUPTURE DISC OR SAFETY HEAD	PRESSURE SAFETY ELEMENT	PSE		
TEMPERATURE	FUSIBLE MATERIAL	TEMPERATURE SAFETY ELEMENT	TSE		
	HIGH TEMPERATURE SENSOR	TEMPERATURE SAFETY HIGH	TSH	TSHL	
	LOW TEMPERATURE SENSOR	TEMPERATURE SAFETY LOW	TSL		

SHUTDOWN VALVES					
SERVICE	SYMBOLS FOR VARIOUS TYPE ACTUATORS				
	DIAPHRAGM	STRAIGHT PISTON	90° TURN PISTON	MOTOR	THIS BOOK
WELLHEAD SURFACE SAFETY VALVE	SSV	SSV			
ALL OTHER SHUTDOWN VALVES	SDV	SDV	SDV	M SDV	

Fig. 4.2 *Safety device symbols*

5

Criteria For Safety System

The basic system has several functions that are common to all safety systems (Fig. 5.1). In some cases multiple functions are combined in one component.

For example, the sensing pilot may also be the actuator pilot, and the actuator may be an integral part of the valve.

There are some direct-controlled systems where the sensor and actuator form an integral part of the valve. Remote controlled systems have the controls separate from the valve and may have several components, such as sensing pilots, to accomplish one function.

Pressure sensing systems

Any pressure sensing system requires pressure drop, due to flow restriction, to cause a condition that can be sensed. Sometimes the entire well and production equipment becomes a part of the safety system. Pressures will change only due to changes in flowing conditions.

Excess flow type tubing safety valves depend upon the restriction of flow in the tubing above and in the wellhead to limit flow a point below the setting of the safety valve. When this restriction is lost then the pressure drop across the sensor inside the safety valve exceeds the preset value and the valve shuts.

Pressure-sensing tubing safety valves (Fig. 5.2) are designed to use the flow restriction of the formation and the tubing below it (ahead of it) to limit the pressure at the valve. When the restriction above the valve (behind or downstream) is reduced, the pressure at the valve drops to the preset value at the valve and the valve shuts. In every case the flow system is an integral part of the sensing system.

Pressures sensed are always pressure differences. The pressure difference may be across a component such as a bean (or choke) or it

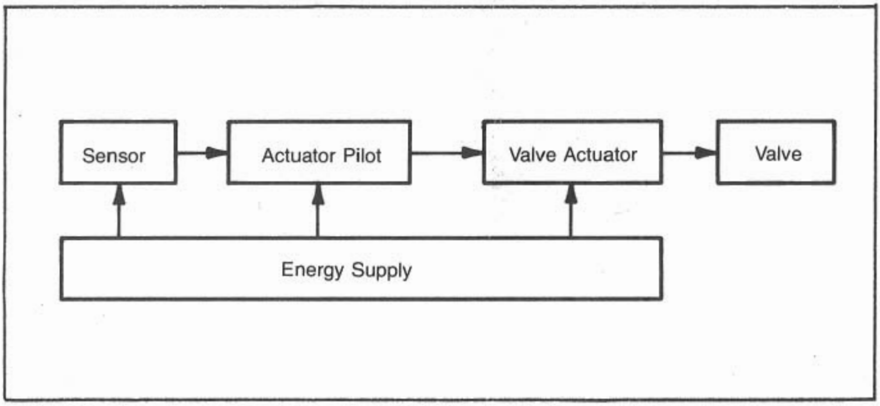

Fig. 5.1 *Basic system logic*

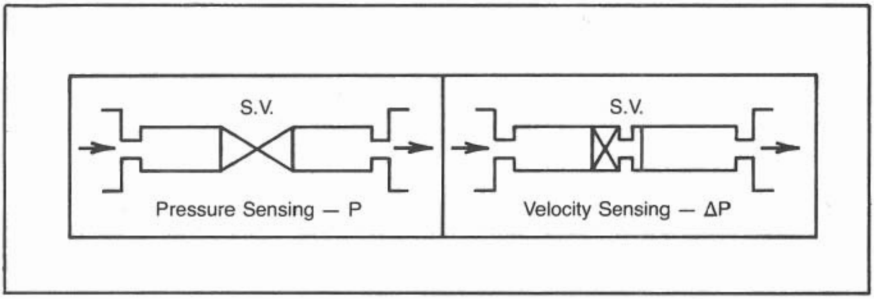

Fig. 5.2 *Direct controlled safety valve types*

may be relative to a fixed comparison pressure such as a charged chamber or atmospheric pressure.

Pressure is sensed as an indirect indicator of a malfunction. It may be the alarm condition for high pressure, when high pressure tends to exceed the capability of the vessels which hold it. Low pressure, on the other hand, is not usually an alarm condition, it is simply the situation that can be sensed to indicate that an alarm condition exists.

This alarm condition is usually leakage. Unfortunately, the leakage rate must be very large, the kind associated with vessel rupture. The leak from a corrosion pit or erosion hole may be very small compared to the ability of the system to maintain pressure.

Even rupture of a long pipeline may not be detectable from the upstream end if normal flow rates require substantial pressure drops. Sensors should be located as far downstream as practical, with the shutoff valve as far upstream as possible.

Fig. 5.3 shows how a rupture of a long (large length to diameter ratio) flow line may have a small percentage pressure drop near the choke but a large pressure drop near the downstream end. This is more pronounced in a gas line. Unfortunately, it is often impractical to locate the sensor significantly far downstream. Pneumatic control lines just are not very adaptable to long distance telemetry.

In the case of platforms this is not normally a serious problem on flow lines because of the short lengths of flow lines.

Pressure drop sensing is a problem on small leaks. One bbl/hr is a very troublesome rate where pollution of the ocean and hazard of fire are involved, but it may be impractical to detect this by pressure drop.

Direct controlled systems

Direct controlled systems sense and control at the safety valve. Generally this is the simplest system and uses the flow line media pressure to power the safety valve. Since the sensing is at the safety valve only, there is a limited variety of parameters that can be sensed. This almost always is pressure.

The usual arrangement is a line pressure operated valve with high and/or low pressure sensors screwed into the actuator or safety valve. When abnormal pressure occurs in the flow line at the valve, the pilots bleed pressure from one side of a piston and line pressure pushes the valve to the closed position.

Other types of safety valves might hold the valve open with a latch which is triggered by the pilot; or, the sensing pilot may be the safety valve.

Each of these systems can only sense at the valve, so placement of the valve is critical. Normally, the valve is placed as far upstream as possible, and yet downstream of the pressure reducing restriction (choke). Sometimes the valve cannot be placed very close to the choke because of the erosive effects of turbulence immediately downstream of the choke.

Often the direct controlled system is dictated by the lack of instrument control gas available. This makes a direct controlled system almost mandatory when the safety valve is located a long distance from other facilities. Such applications are satellite oil wells and oil pipelines.

Limitations on the ability of sensing pilots to detect a line break must be acknowledged and the spacing and settings of the safety valves must be made accordingly.

When used with a well, the safety valve must be placed on the flow line downstream of the choke. Then, if the flow lines rupture, the low

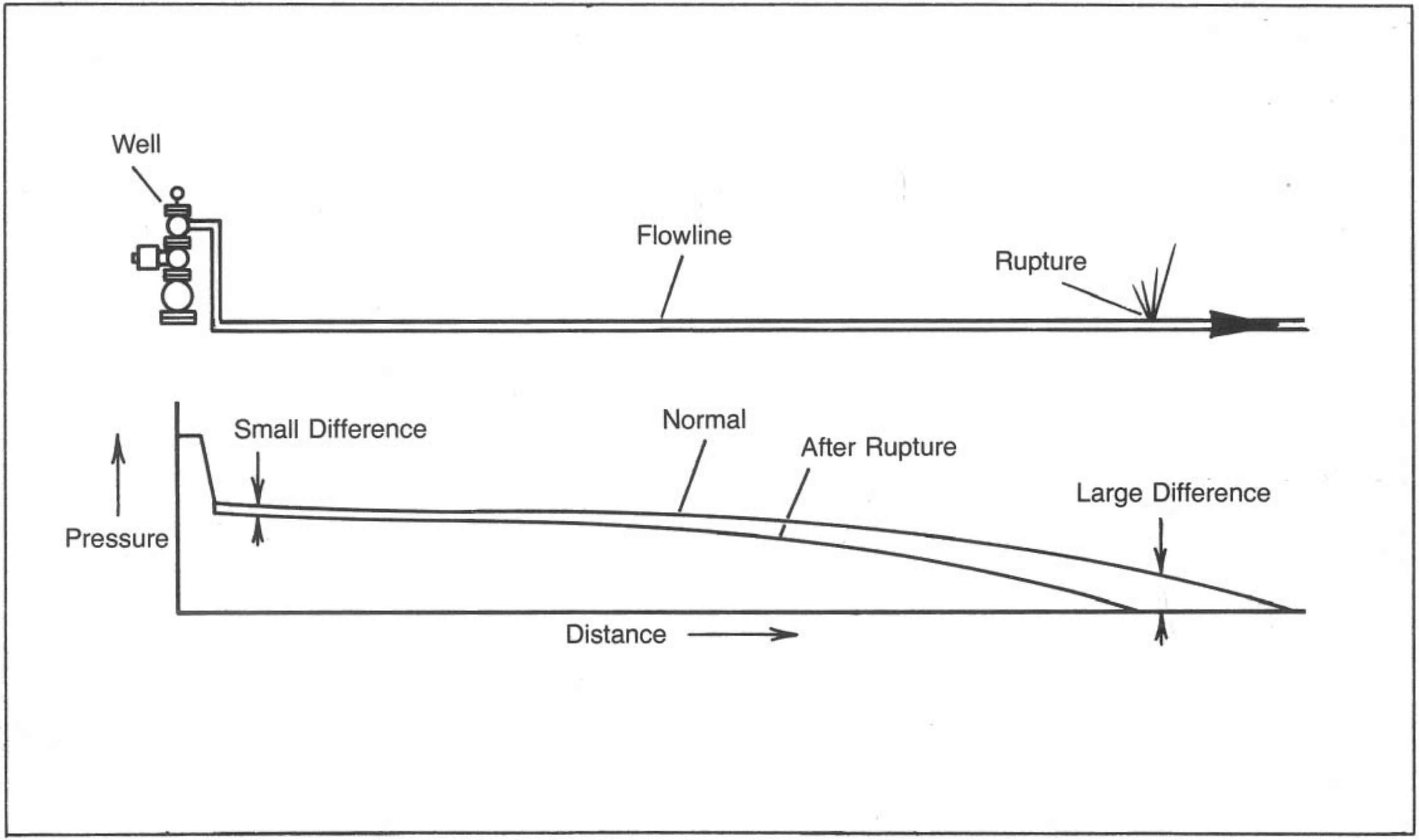

Fig. 5.3 *Pressure profile in a flow line*

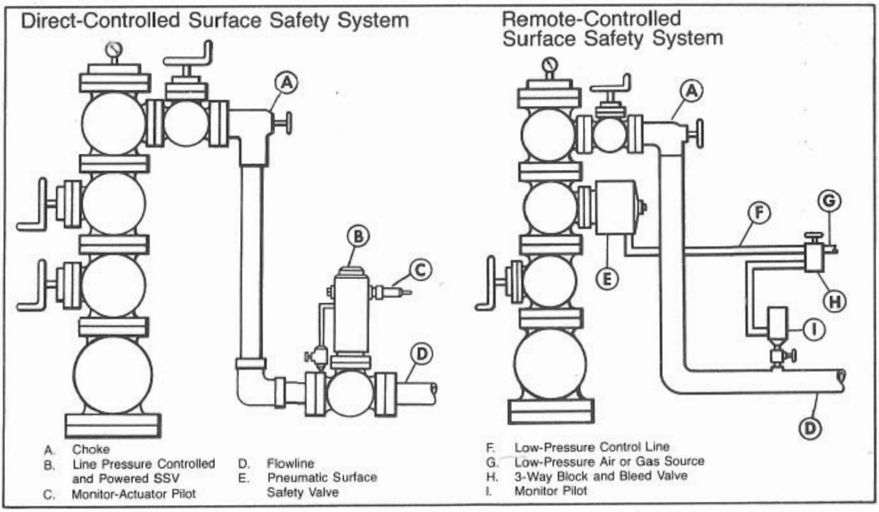

Fig. 5.4 *Basic types of systems*

pressure sensor will react and the well will be shut in to prevent further uncontrolled flow. This is the usual situation.

Another is for the safety valve to sense a high pressure due either to a malfunctioning control valve downstream or to the line being plugged by freezing. It would not do to place the direct controlled safety valve upstream of the choke because a rupture of the flow line, even immediately downstream of the choke, normally would not be sensed due to the restriction of the choke.

Remote controlled systems

Remote controlled systems have a great deal more flexibility as to where the sensors and valves can be placed, what the sensors can detect, and the logic by which the system is interlocked or sequenced to close.

It is desirable to place the shut-in valve as far upstream as possible. The safest location for the safety valve is underground where it can be protected from mechanical damage and fire. The next best place is for the valve to be the upper master valve. Both of these locations require remote sensors since the pressure and other parameters, in various pressure sections of the flow stream on the lease, cannot be sensed at the valve.

Another advantage of remote controlled systems is the higher pressure available at the valve with which to power the actuator. From the actuator's standpoint the worst position for the safety valve would be immediately downstream of the choke. If the flow line breaks off cleanly just downstream of the safety valve there will be essentially no pressure available to start the valve to close. If the valve starts to close due to a spring, or the sensing pilot actuates before the pressure has a chance to go to zero, usually it can be expected to develop enough of a restriction to raise the line pressure enough to continue the closure.

Fig. 5.4 shows basic types of systems.

Even if the choke is severed there will be some pressure in the safety valve because of the flow friction at the tee, or cross, and through the wing valve.

Being the upper master valve, the safety valve is inherently sturdier and less likely to be damaged.

Most remote systems (Fig. 5.5) use relatively low pressure (30 to 250 psi) gas as the control media. Gas (air, natural gas, or nitrogen) has these advantages:

1. It is easily valved and is controlled with commercially available components.
2. It does not freeze (if dry).
3. It can be available in relatively large quantities (some limits on nitrogen).
4. It is safe and clean for bleeding to atmosphere (some exceptions for natural gas).
5. Relatively large forces can be developed for actuators.
6. It is non-corrosive.
7. It can be interfaced easily with hydraulic and electrical systems.

Most systems use components that do not bleed continuously, thus the system can be fail-safe without being a large power consumer. Electrical/mechanical systems require constant power input if they are to be fail-safe. They are impractical to design if the actuator is to be fail-safe upon loss of power.

Even with mechanical latches large enough to permit power reduction for standby, the mechanical actuation problems are almost prohibitive.

Hydraulic systems have some of the advantages of gas except that there must be a pump to supply the high pressure, and of course, the hydraulic fluid must be exhausted back into a reservoir and reused.

The higher hydraulic pressure has the advantage of not needing such large pistons. This is mandatory for subsurface valves and for surface safety valves for some multiple valves and composite trees.

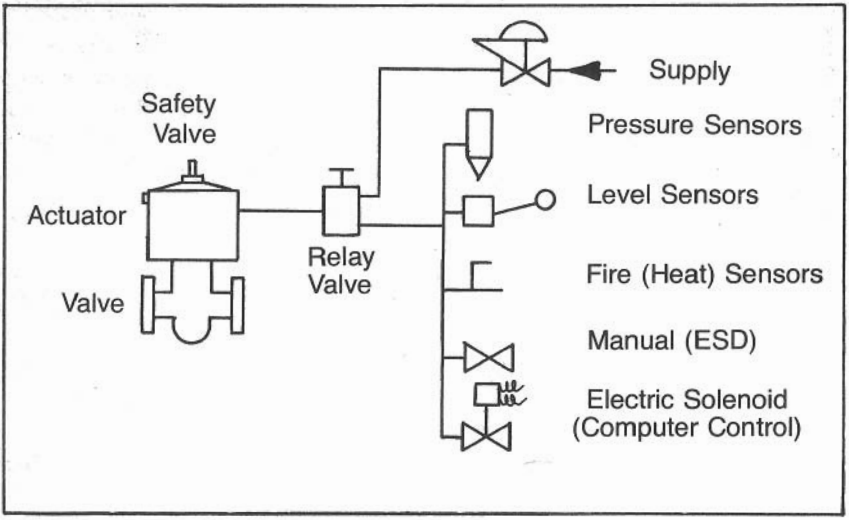

Fig. 5.5 *Remote controlled system*

Branched systems

Branched systems permit the closure of one valve, a limited group of valves, or all the valves on a location, depending upon which sensor detects the undesirable condition.

For example, if a flow line ruptures, only the one well needs to be shut in. All the other wells can continue to produce. If liquid level in a holding tank gets too high, only the oil wells producing into it need to be shut.

On the other hand, sales line failure or fire on a platform may require shutting all the wells and depressurizing the entire facility.

Interfacing with other systems is reasonably simple with low pressure gas control systems. Usually this is done with solenoid valves which may be controlled by computers, electrical sensors, flame (UV) detectors, and/or pressure switches. Feedback information usually is provided by pressure switches which sense control pressure and by position indicators on the surface safety valve.

Feedback to the control room on a platform can be telemetered with a pressure system. There are a variety of position indicators, pressure indicators (on-off), and first out indicators available. Status indication feedback is necessary to verify that the signal or command sent to a device has been followed. Normally this information is binary; that is, the valve is either full-open or full-closed.

6

Lease Equipment

To build or repair a safety system to protect equipment, it is necessary to understand what equipment there is, how it works, and why it is there. There are relatively few basic types of process equipment but these are made in a variety of sizes, types, and pressure ratings.

The functions that are performed on a flowing well lease include:

1. Flow control—The wellhead valving and choke are the primary controls. In some cases the choke may be on another piece of equipment, such as the gas heater, away from the wellhead.

2. Separation—The gas, oil, water, and basic sediment (BS) need to be separated for measurement, sale, and/or disposal. The different types of separators used are chosen for the type of separation required and the degree of purity required. Well effluents have varying concentrations of the main ingredients: gas, oil, and water.

The performance requirements and techniques for a separator are different for removal of 90% of the water in an oil line, for instance, than for reduction of the water content in a gas line from 5% to 1.5%. Cost is a factor, too.

3. Heating—When high pressure gas is expanded through a choke, it gets colder. The refrigeration effect can be enough to freeze produced water and plug the flow line. In some cases the gas is heated after and/or before it passes through the choke to prevent this freezing.

4. Demulsification—Sometimes the water and oil that are produced do not separate in a gravity separator because they have formed a water-oil emulsion. For these situations small amounts of chemical are added and/or the emulsion is heated in a heater-treater to separate the oil and water. Electrostatic separators are sometimes used.

5. Measurement and transfer—Meters for oil are usually turbine or positive displacement types, and orifice plate meters are normally used for gas measurement. Some leases are equipped with lease automatic custody transfer (LACT) units that handle the production automatically and may be supervised by a remote computer.

6. Storage—Tanks may have vapor control and recovery capability.
7. Compression and pumping—Pressure is required to get fluids to flow.

Common to most of the equipment is that it is handling a fluid. Even the storage tanks are enclosed to reduce vapor losses and the danger of fire and explosion. All vessels must be capable of handling the required pressure and flow.

Typically, production goes from the wells on the lease to a set of header manifolds to a pair of separators. One separator is the production separator, which is sized to handle the production from the entire lease. The other is the test separator. One well's production at a time is flowed through the test separator so that its production can be metered individually. The production from each well is compared to the production of all the wells as a cross check for accounting.

If the wells are high pressure gas wells, the pressure may have to be dropped through a heater to prevent freezing and plugging. The separators may need to be staged to increase the efficiency, depending upon the content of the crude production. For example, a free water knockout may be added if the wells are producing a large percentage of water that drops out easily.

From the separators the oil and gas are metered. The oil is put in the tank or pumped into the sales pipeline. The gas is metered and flowed, or compressed and flowed, into the sales line.

Sometimes, after metering, the oil and gas are recombined before entering the pipeline. This depends upon the gathering and sales arrangement. As soon as they have been cleaned the water and sand are disposed of, so as to not pollute. The flow diagram shown in Fig. 6.1 is an example of typical parts of a flowing well field.

Other conditions and equipment include:

- Artifical lift:
  - Rod pump
  - Gaslift
  - Submersible pump
- Injection wells:
  - Waterflood/pressure maintenance
  - Gas recycling
  - Steam injection ("huff and puff")
  - Miscible phase flood
  - Fire flood

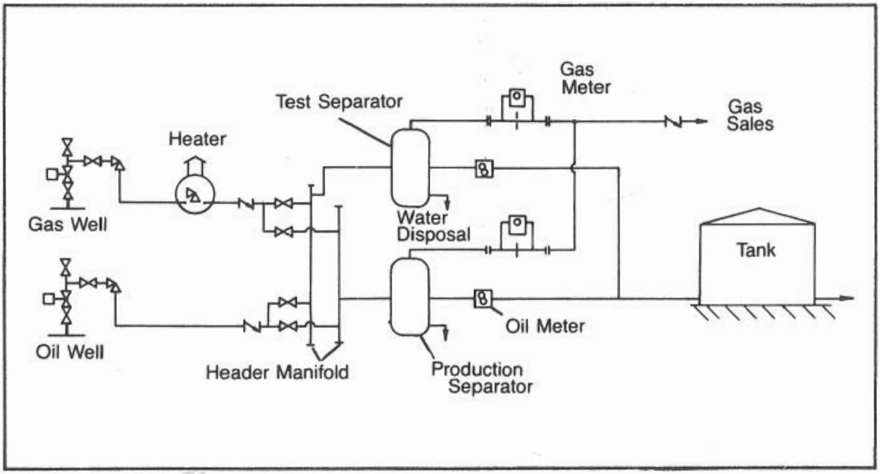

Fig. 6.1 *Basic general flow diagram*

- Pumping:
    - Gas compression
    - Oil pumping
- Primary flow control
    - Float valves and controllers
    - Switching valves
    - Motor valves
    - Gages
    - Regulators
- Processing:
    - Separation
    - Demulsifiers/heater-treater
    - Dehydrators (solid or glycol)
    - Filters
    - Desanders
    - Desalters
    - Water knockout
    - Low temperature extraction (LTX)
    - Vapor recovery
    - H_2S removal
- Safety systems:
    - Anticollision lights
    - Remote control valve (ESD)
    - Shutdown valves (SDV/SSV/SSSV)

  - Relief valves/burst discs (PSV/PSE)
  - Level sensors
  - Pressure sensors (PSH/PSL)
  - Temperature sensors (TSE/TSH/TSL)
  - Flame sensors (BSL)
  - Flame arrestors
  - Check valves (FSV)
  - Combustible gas detector (ASH)
  - Flow sensor (FSH/FSL)
  - Fire fighting system
- Control system and fuel gas supply
  - Scrubber
  - Regulators
  - Air compressor
- Disposal
  - Flare scrubber
  - Water skimmer
  - Holding tank
  - Overflow pans

To understand the system, it is better to look at each component separately to determine what it does, how it does it, what the inputs and outputs are, what controls are used, and how to protect it and the system with safety devices.

The Well—Downhole

After a well is drilled into a hydrocarbon bearing formation, it is tested. If it is found to be one of those few (one of every six wildcats or two of every three wells drilled) that are commercial the well is completed.

The production string of casing is cemented into place, the tubing is run, the wellhead installed, and the well perforated. Then the drilling fluid is removed and the well is produced. Other equipment installed with the tubing includes the packer, which anchors the bottom of the tubing and seals off between the tubing and casing. Landing nipples for installing flow control devices, such as tubing safety valves, are usually a part of the tubing string. A circulating device usually is located near the packer so that fluids can be circulated into the well to kill it, or to perform other maintenance work.

The tubing protects the large diameter cemented-in casing from corrosive produced fluids and high pressure. It also provides a means for circulating fluids down the hole. This completion is very basic. Multiple completions for high flow rate wells with multiple zones, pumpdown, and problem fluids can complicate the system fast.

A simple single zone completion is shown in Fig. 6.2.

The Well—Surface

The wellhead is supported by the surface string of casing. It then supports the other casing strings, tubing, and the Christmas tree. The valves in the vertical run of the tree must have at least as large a bore as the inside diameter of the tubing for wireline operations.

The first valve in the run of the tree is the master valve. Its use is normally reserved for shutting in the well for repair of the upper master, swab, or wing valve. To repair a leaking lower master valve, the well must be killed by pumping in liquid or by plugging the tubing by wireline methods. Primary on-off control is with the wing valve.

It is suggested that the surface safety valve be used as the upper master valve so that the well can be controlled even if the swab valve or wing valve is damaged. The first alternative is for the safety valve to be the first wing valve, i.e., the second valve in the flow stream.

By far, the most popular types of Christmas tree valves are thru-conduit gate valves. In a very few cases plug valves are used.

Rate of production is controlled by producing through a restriction, a choke. Chokes may be adjustable or positive (fixed). Adjustable chokes are very rugged needle valves, or a turret arrangement of positive chokes. Positive chokes have replaceable orifices of very hard material such as tungsten carbide or alumina ceramic. Or, in non-sand-producing wells, the orifice may be steel, but the orifice holes are very long in order to reduce wear for long life.

Basic dimensional, material, and performance features for wellhead equipment are described in API Spec. 6A (Fig. 6.4). The pressure ratings of wellhead equipment are standardized. The equipment for any given well is selected with a working pressure rating greater than the highest pressure to which it will be subjected. Shut-in tubing pressure (SITP) may not be the limiting pressure. Even greater pressures may be applied during well stimulation operations such as hydraulic fracturing or acidizing.

Even though 2,000 and 3,000-psi working pressure equipment is

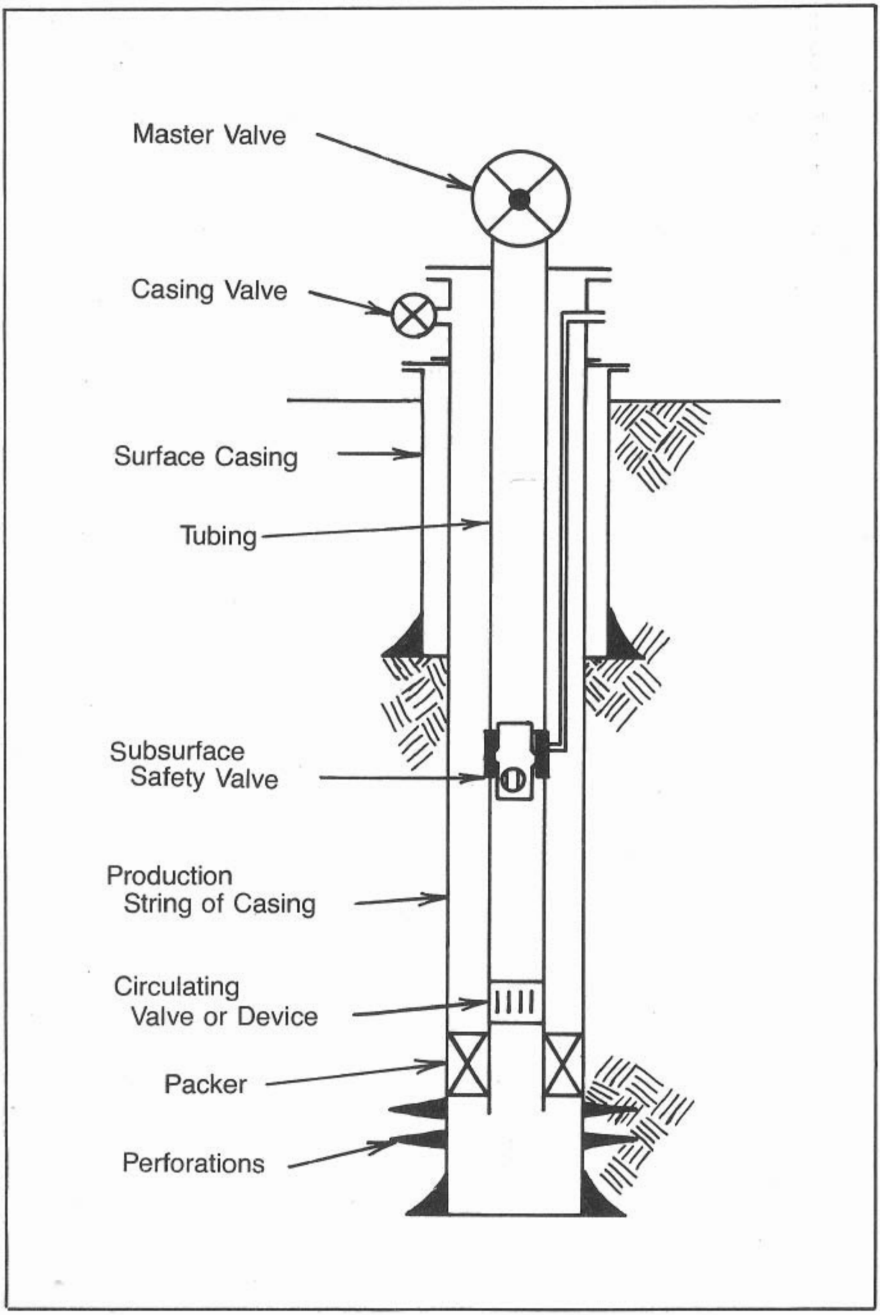

Fig. 6.2 *Simple single zone completion*

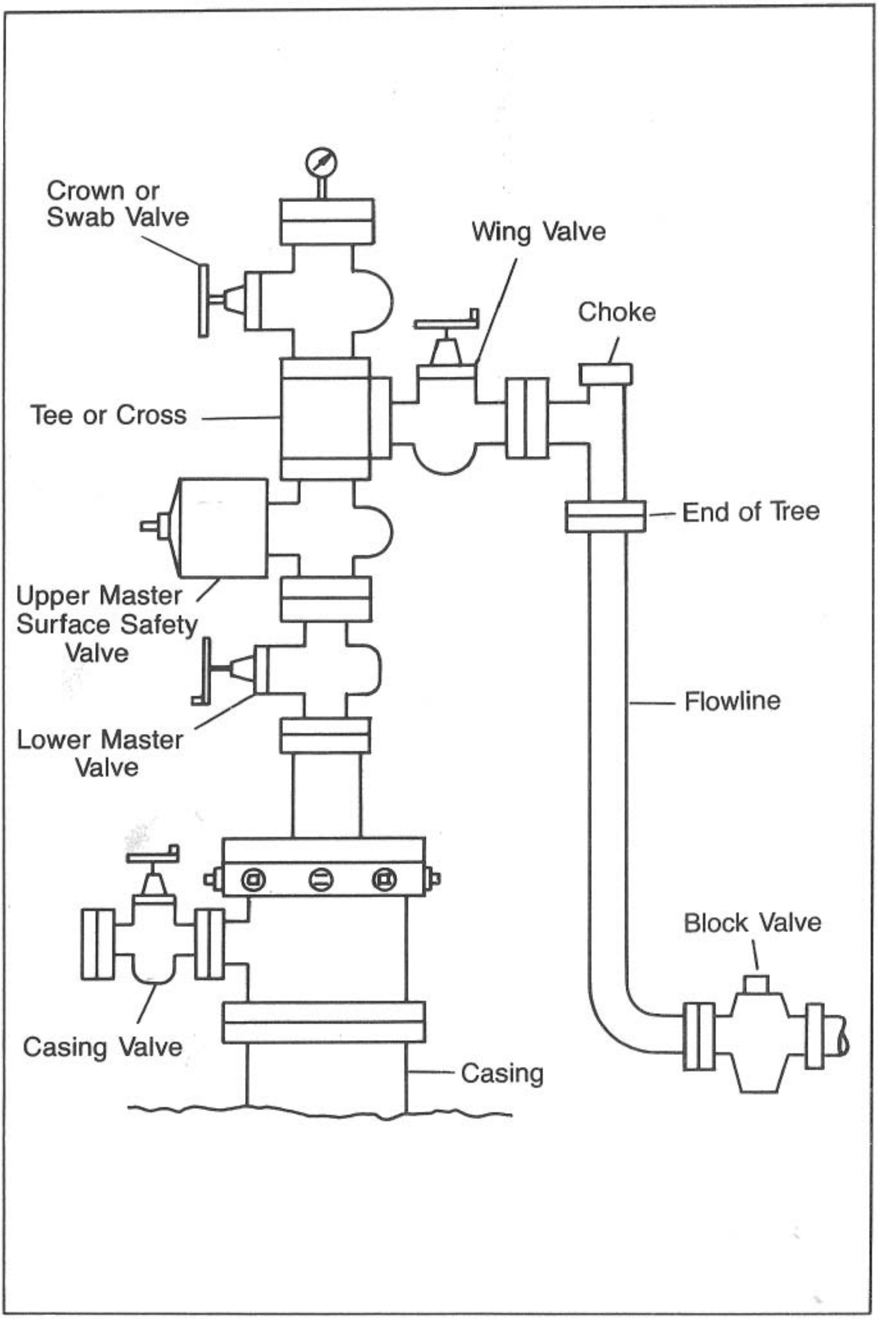

Fig. 6.3 *Christmas tree*

Working Pressure psi	*Test Pressure psi*	*API Material Type*
2000	4000	II
3000	6000	II
5000	10000	II
10000	15000	II
15000	22500	III
20000	30000	III
30000	37500	V (Tentative)

Fig. 6.4 *Standard working pressure—API 6-A*

available, many operating companies use 5,000 psi as a standard to reduce inventory and increase interchangeability.

Not all parts of the surface equipment on a well have the same pressure rating. Casing support components generally have lower pressure ratings than tubing pressure control components. The generally accepted limit of the wellhead equipment is the choke. This is because the usual practice is to limit production rate with the choke. In some cases the pressure drop may occur some distance away, at the heater.

In this case, the flow line must withstand the shut-in tubing pressure (SITP), and an oversized safety choke would be used at the wells. If a block valve can be closed downstream of the choke and permit SITP to the valve, then that part of the flow line must be capable of handling the pressure and must be protected with safety relief and safety shut-in valves.

Flow lines and header manifold

Production from each well flows through the gathering lines into a header (Fig. 6.5). There it combines with the production from the other wells on the lease before going to the processing and measuring equipment.

The flow lines may be relatively long between land wells (or offshore satellite wells) and the header. Although the flow lines may be short on an offshore platform, danger still exists of flowline failure by rupture.

To reduce the hazard of further damage, a surface safety valve on the well and a check valve at the header will stop the flow. The choice of what sensors are used, and where, is determined by the working pressure of the flow line and the SITP. If the flow line segment is not rated to hold SITP, a relief valve (PSV) and high pressure sensor (PSH) should be used.

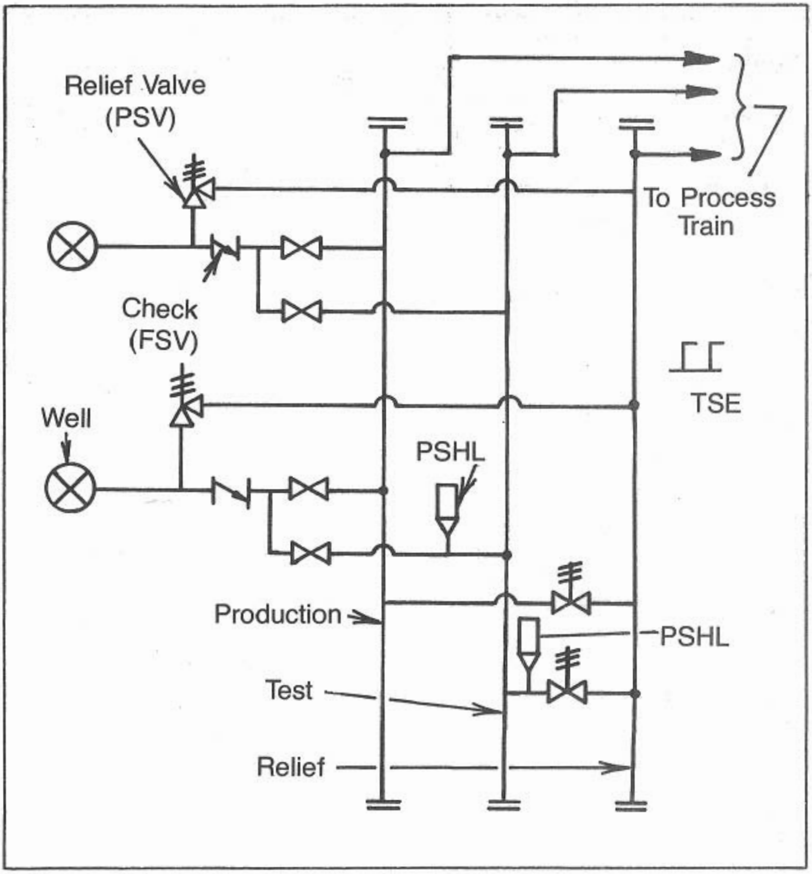

Fig. 6.5 *Header manifold*

A high pressure sensor should be used on any flow line segment which is downstream of the choke, regardless of the pressure rating. This is to guard against pressure buildup due to freezing or a stuck flow control valve. But the relief valve is not needed if the flow line is strong enough to hold SITP.

If the flow line length is less than 10 ft from the surface safety valve (SSV), then no low pressure sensor (PSL) is needed, according to API RP14-C.

Wellhead flow lines and safety devices are shown in Fig. 6.6.

Flowing pressure in the header always must be less than the pressure from the lowest pressure well. Otherwise the low pressure well will not flow. In some installations, it may be necessary to have two sets of

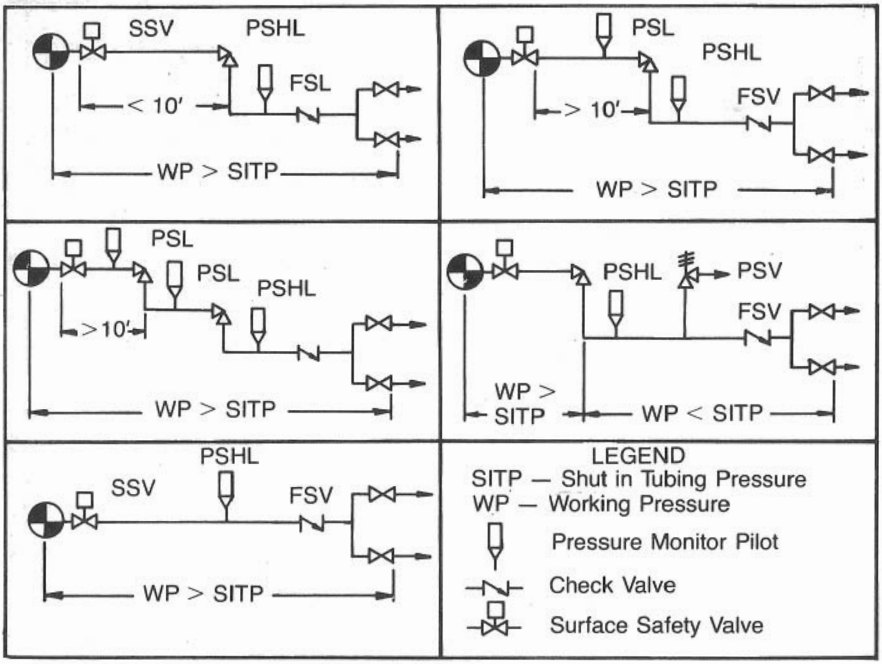

Fig. 6.6 *Wellhead flow lines and safety devices*

production and test headers if there is a large difference between the flowing characteristics of some wells compared with others.

The relief branch of the header feeds into the flare line through a scrubber. After the check valve (FSV), there are two valves, or one selector valve, to direct each well's flow through either the test separator or the production separator so that each well can be tested individually for flow rate. Chokes can be positive, hand adjustable, or diaphragm-operated by an outside controller.

Gas heater

The purpose of the heater (Fig. 6.7) is to prevent freezing due to the refrigeration effect of gas expansion. Both heaters and heater-treaters have a chimney (stack) and burner controls.

The flow line may make an initial pass through the heating chamber before it reaches the choke. Immediately after it leaves the choke, the flow tube passes through the heating chamber, which may be filled with air, a liquid, or a molten salt bath.

That chamber then is heated by the burner. Normally, the well fluids are indirectly heated to reduce hot spots that might accelerate failure by

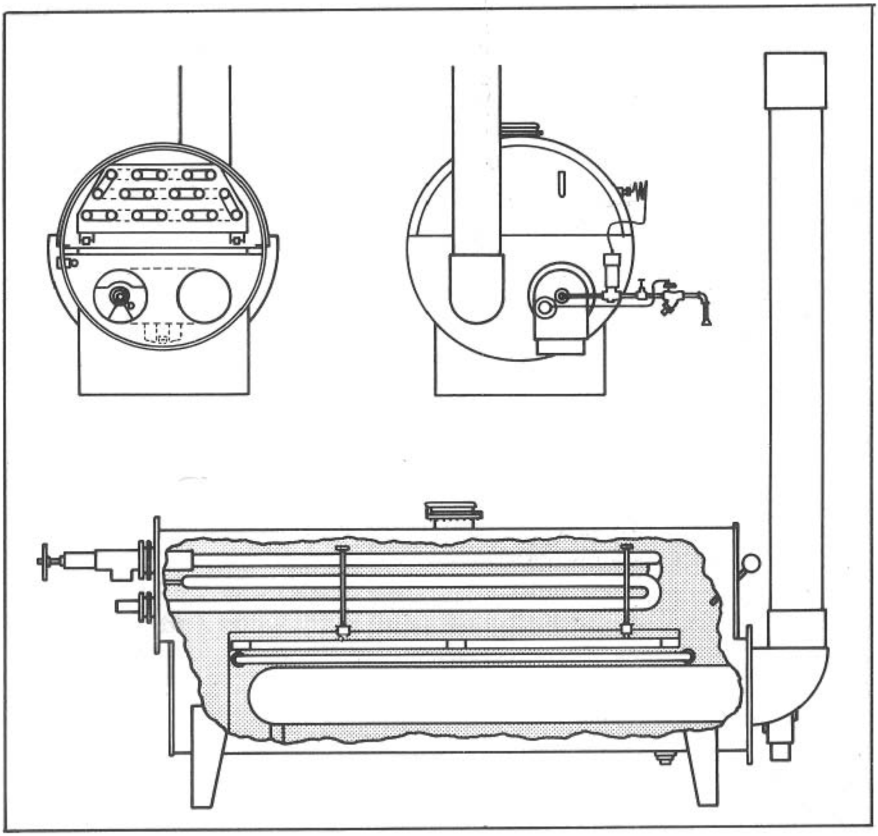

Fig. 6.7 *Gas heater. Courtesy of C-E NATCO*

high temperature corrosion. The burner may have a natural or forced draft.

Safety devices on the heater must guard against overpressure and leaks, plus the problems of fire. To detect overheating, high temperature sensors should sense the media or process fluid and the exhaust stack. If the pressure vessel gets too hot, the fuel supply and any other combustibles need to be shut off. If the temperature sensors can't sense quickly enough, the fuel may need to be shut off when a flow sensor (FSL) detects insufficient gas flow rate.

Heat detectors (TSE), such as fusible plugs or plastic control line, should sense any fires that might develop. These temperature sensors should be a part of the ESD system and should shut in the wells and any fuel that might reach the fire.

A flame arrestor on the inlet of a natural draft heater will prevent the flame from migrating backward. A stack arrestor on the chimney will prevent sparks from igniting any combustible mixtures outside the unit. A flame detector (BSL) or temperature sensor (TSL) should be in the combustion chamber to insure that any fuel that comes in will be ignited immediately, otherwise gas could accumulate and explode.

The choke at the heater is the limit of a segment of the flow line. Pressure sensors upstream and downstream should follow the guidelines shown for flow lines and headers.

Pressure vessels

Most process pressure vessels are made by rolling plate into a cylinder and welding a formed head on each end. This type of construction requires the use of highly weldable steel, and this kind of steel is generally low in strength.

Inlets, outlets, and internal compartments also are welded on. Each connection to the pressure-containing wall adds to the cost and presents another possible trouble spot.

To contain required volume and use a minimum amount of steel, high pressure vessels normally are small in diameter and long. Lower pressure vessels may be relatively "fat".

High pressure vessels have thick walls and are very expensive. The cost of thick walls and other factors usually make it impractical to have the process vessels, such as separators, carry the same high pressures as the wellhead carries. Because of the high risk of accidentally applying excess pressure and the seriousness of an explosive rupture, dependable overpressure protection is necessary.

There are two ways to prevent overpressure: to stop flow in, and to increase flow out. Oilfield safety systems stop flow in by shutting the wells with SSV's. The SSV's are controlled by high pressure sensors (PSH) located on or near the vessel. If the sensor is located on the vessel, it normally is located on or near the top, in the gas or vapor section. It may be easier to have the connection on the gas outlet piping as long as the pressure difference is negligible.

The two main types of relief devices are relief valves and burst plates. These are also located high in the gas or vapor section so that, at least initially, they relieve gas, which is easier to dispose of than is the liquid in the lower section of the vessel.

Safety devices for pressure vessels are shown in Fig. 6.8.

Burst plates, or burst discs (Fig. 6.9), have a pressure retaining plate, or membrane, that is carefully designed and manufactured to rupture at a predetermined pressure. They are sample tested at the factory to determine the actual pressure at which the batch will burst. Field testing of the device only determines that it does not leak nor rupture below the test pressure. If it is put under too much pressure, it will burst and have to be replaced.

Relief valves (Fig. 6.10) are more versatile in their application. They

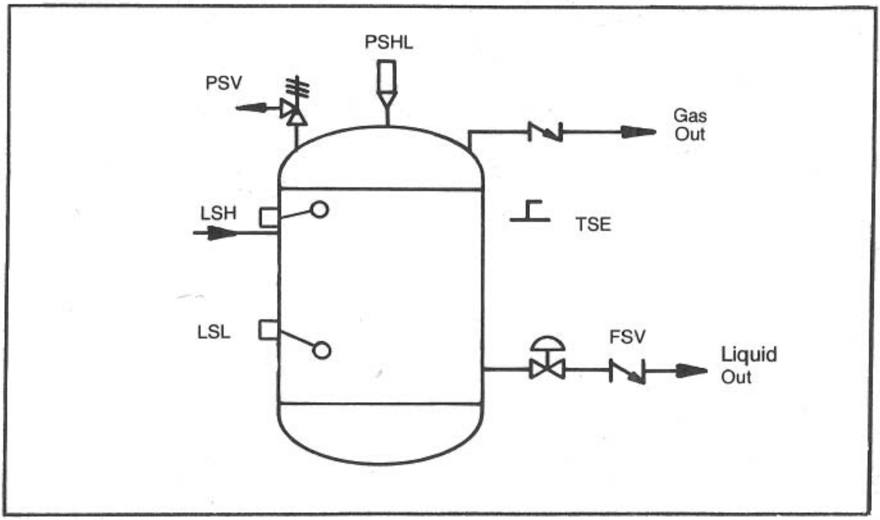

Fig. 6.8 *Safety devices for pressure vessels*

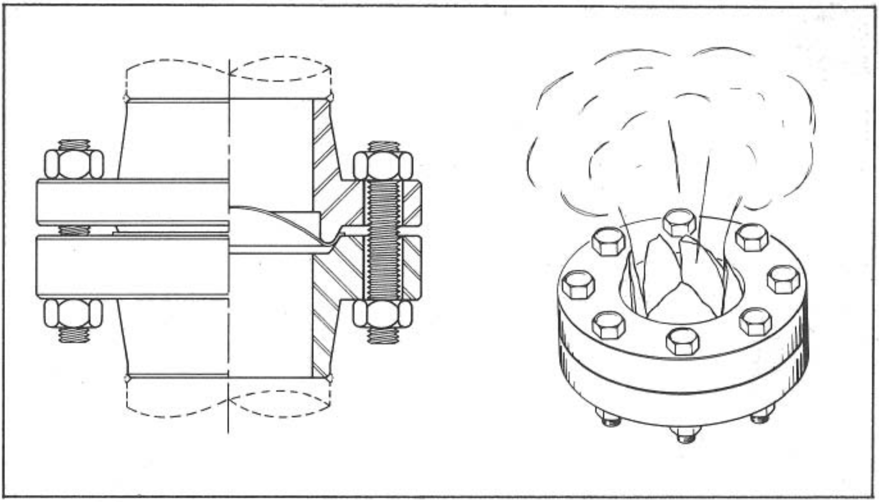

Fig. 6.9 *Typical rupture disk. Courtesy of C-E INVALCO*

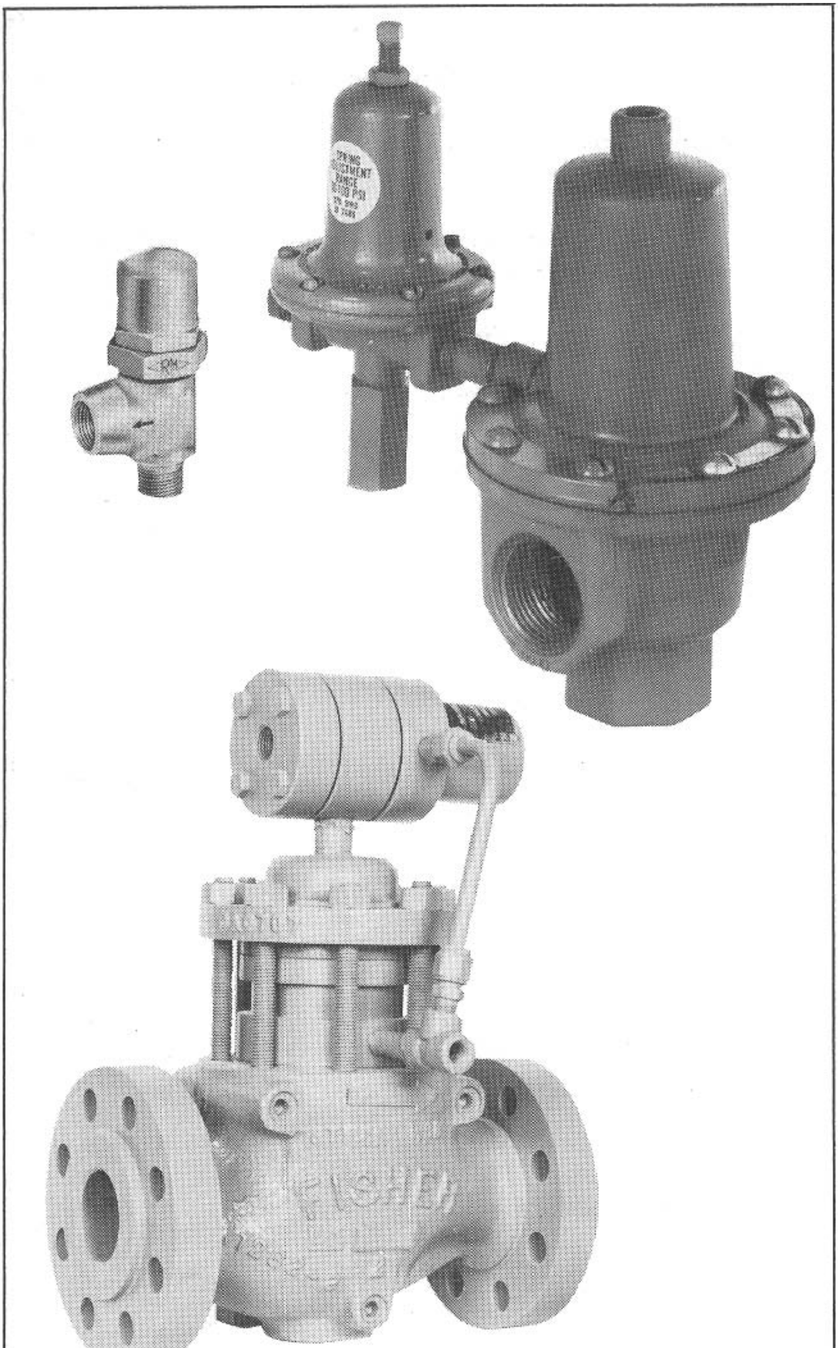

Fig. 6.10 *Relief valves. Courtesy of C-E INVALCO, FISHER CONTROLS, TELEDYNE REPUBLIC MFG.*

can be adjusted for various applications, then the setting must be verified by test. There are direct acting and remote controlled types. The direct acting type is a poppet valve held on seat against pressure by a spring. When the pressure force exceeds the spring force, the valve opens.

Relief valves can be designed so that when leakage rates exceed a certain amount, the valve will snap fully open and stay open until the upstream pressure drops to a considerable percentage below the setting. Then the valve will close fully and seat.

The remote-controlled types are held on seat by a piston. When a pilot valve trips, the relief valve snaps to full open until the pressure drops to the reset pressure. Remote types are advantageous because they weep less and are more appropriate for larger sizes.

Most pressure vessels are for handling liquids and gas. They have at least two outlets because they are used for some type of separation. To maintain the levels within certain specified limits there are primary control valves on the outlets.

The control valves are operated by floats which sense the fluid levels. In systems of less than about 150 to 200 psi, the floats may operate the valves by direct mechanical linkage. Above this pressure range, the float usually controls a gas pressure signal to the diaphragm of a control valve (Fig. 6.11). Control signal pressure normally ranges from 3 to 15 psi, full closed to full open. Some signal generators in this type of control circuit are constant bleed type valves or servo valves.

Fig. 6.12 shows a pressure sensing controller unit for a diaphragm operated valve.

This is in contrast to the normal design practices for safety systems, which are dead-ended static systems that use power only for infrequent operations. Other level sensors on the vessel are controls for the safety valve. Thus, while the system is flowing, if the primary control system malfunctions, the level sensors (LSH/LSL) will shut off production and prevent oil from getting into the gas or water system, or vice versa.

A pressure vessel which contains hydrocarbons should be protected from fire by having the ESD loop with heat sensors (TSE, such as fusible plugs or plastic sections of the loop) adjacent.

Outlets from each pressure vessel lead to some other type of process equipment. If there is a possibility of backflow, there should be a check valve between the two in case the upstream vessel ruptures.

Separators

There are many different types of separators. Choice of which type to use depends upon the volume of fluids to be handled and the

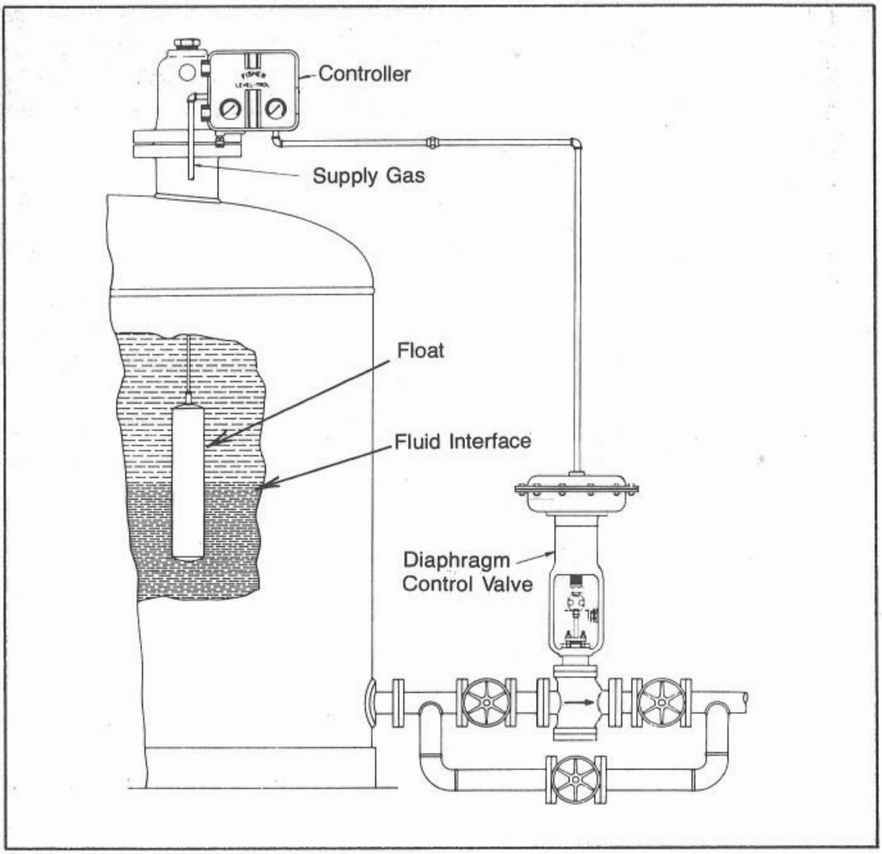

Fig. 6.11 *Level control, pneumatic control type. Courtesy of FISHER CONTROLS COMPANY*

characteristics of the fluids. The techniques for drying gas from 50% to 10% relative humidity are quite different from the techniques for reducing the free water content of crude from 90% to 10%.

Most separators use the density differences of the fluids to effect separation.

This is aided by:

1. Slowing the flow—High velocity tends to mix instead of separate. Since the heavier fluids tend to settle out, slowing or stagnating the flow allows settling.

2. Impingement and wetting—If the flowstream of gas and liquid passes by plates or mesh, the liquid will try to adhere to the mechanical surface. Since oil tends to accumulate with oil, water with water, this coalescing of droplets is a powerful separating force.

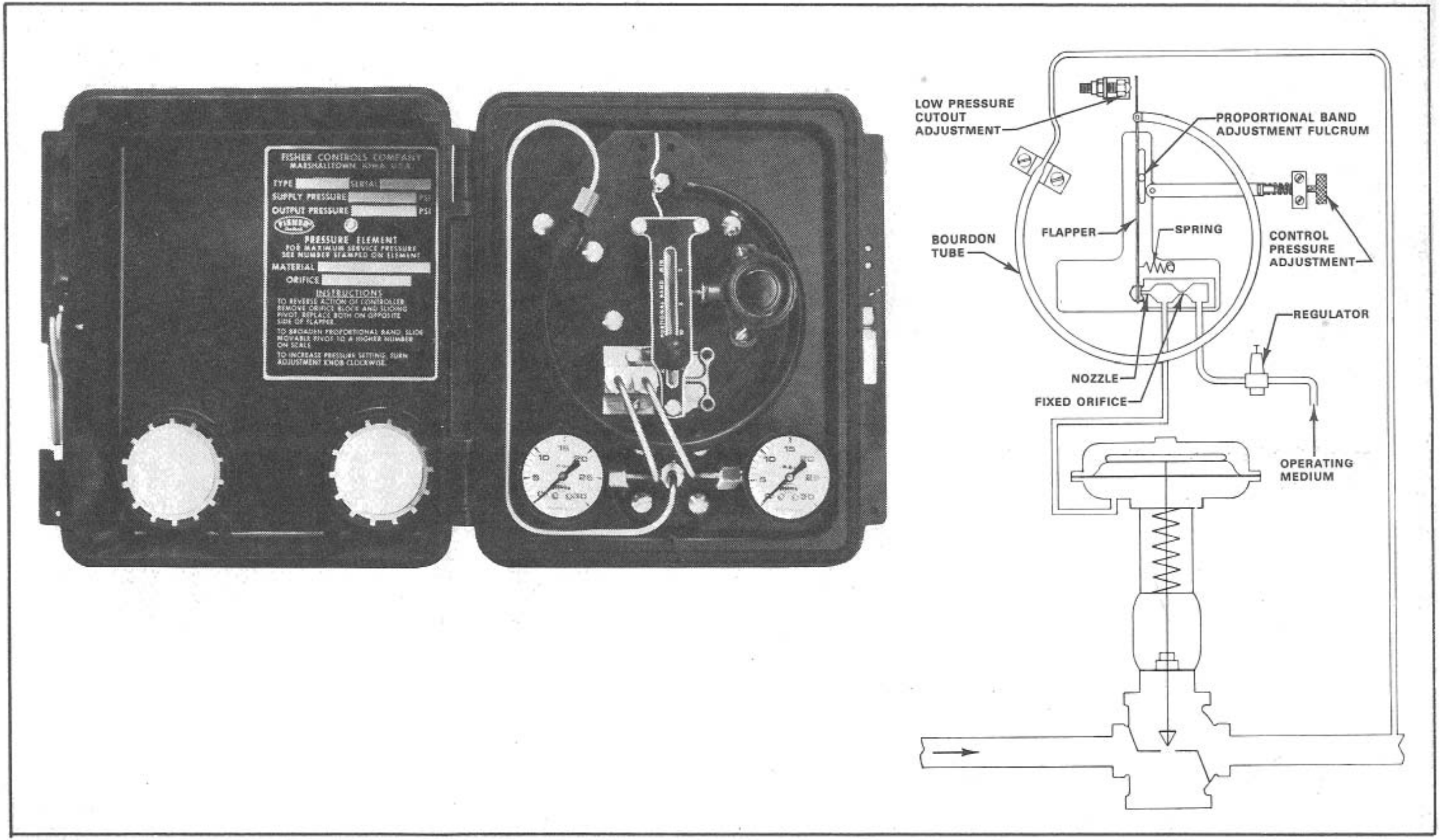

Fig. 6.12 *Controller unit on a diaphragm operated valve. Courtesy of FISHER CONTROLS COMPANY*

3. Centrifugal force—Cyclonic flow tends to throw the heavier substance outward.

4. Chemicals—Emulsions are broken with the addition of small quantities of surfactants that change the surface tension characteristics of at least one of the components.

5. Heat—With or without chemicals, heat can be used to break up emulsions. It also can be used to boil off components, such as water from a dessicant.

6. Cold—The cooling of vapor supersaturates the liquid in gas so that it can be precipitated and removed by mechanical means.

7. Static electricity—Electrostatic precipitators can increase the driving force for moving droplets together in gas dryers and emulsion separators.

8. Desiccants—Solid desiccants, such as silica gel or molecular sieves, and liquid glycol are used to strip water from gas. The desiccant is then heated to drive the water off, and reused.

Since the techniques are different for various ranges of concentration, the separation often is carried out in more than one stage. Sometimes multiple stages are contained in one vessel.

Separators come in various shapes, sizes, and pressure ratings (Fig. 6.13).

The most common type of separator, and the type that normally is thought of as a "separator", is a vessel with one inlet and two or three outlets and some internal baffles and divider plates. The vessel may be horizontal or vertical, and it may be short or long. Some consist of a pair of vessels, one above the other.

Pressure drop through the vessel is negligible but the outlet control valves can isolate the separator from other parts of the system. This requires that for pressure sensor placement the possibility of isolation is considered.

The outlet control valves (dump valves) are controlled by floats. Average densities of the floats are between the densities of the fluids being sensed so that the float will sink in the lighter fluid and float in the heavier fluid.

Water knockouts and scrubbers

Special purpose separators include water knockouts and scrubbers. Water knockouts, or freewater knockouts, precede the regular separator where there is a high percentage of water that is easy to separate from

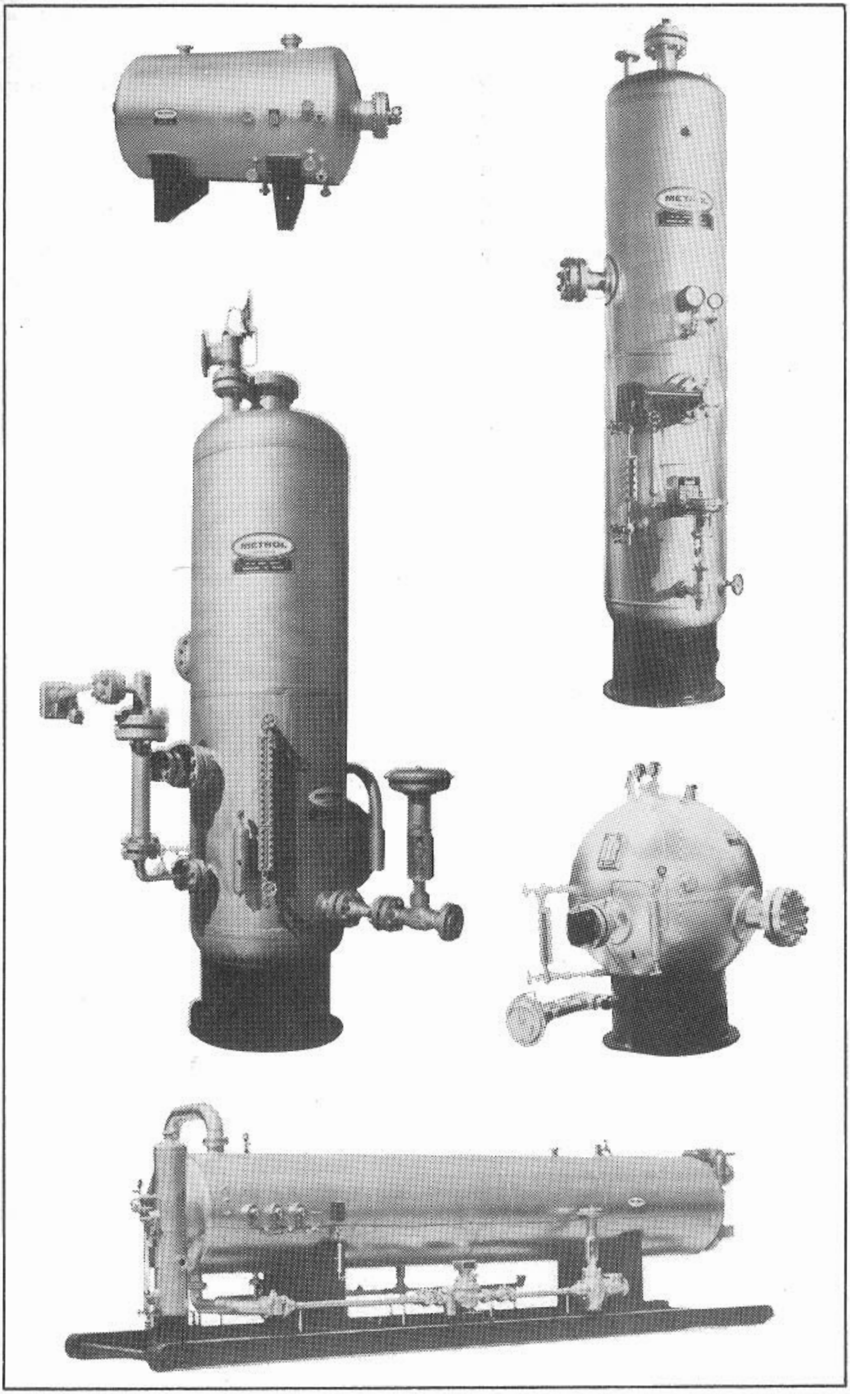

Fig. 6.13 *Separators come in various shapes, sizes, and pressure ratings. Courtesy of METROL CORPORATION*

the oil. When most of this water is removed, the main separator works more efficiently.

Scrubbers are used to remove liquids from gas. Scrubbers may be used to clean the gas for control system supply and fuel gas. Scrubbers usually are operated at less than 150 psi. To keep from spraying oil into the air, a scrubber may also be in the line leading to the flare. The oil would be transferred to a holding tank or pumped into the oil handling system.

Flare scrubbers normally operate at atmospheric pressure, but when large quantities of gas are flared the pressure may rise due to flow friction in the piping.

Heater treaters

Heat and chemicals are used to break down emulsions. Since a heater treater is a fired vessel, it needs all the protection the gas heater has for overheating and fire control.

Heater treaters are identified by the stack and separator type vessel (Fig. 6.14).

Heater treaters are also liquid separators so they need all the consideration that separators and pressure vessels have. They have a chimney stack near a certain location in the liquid section of the process train.

Desiccant dehydrators

Some materials have a strong attraction to water. Ethylene glycol is one of these materials. When gas is bubbled up through glycol, the water is absorbed. A glycol dehydrator is shown in Fig. 6.15.

The water-rich liquid then flows into a reboiler where the mixture is heated to approximately 250 °F., above the boiling point of water (212 °F.) yet below the boiling point of glycol (387 °F.).

The dried glycol then is pumped back into the contactor vessel, probably by a pump that is powered by the wet glycol going to the reboiler. The contactor vessel has a series of trays that overflow glycol from the top to the bottom while gas is bubbling up from the bottom.

The contactor is a pressure vessel, usually vertical, with gas inlet and outlet and negligible pressure drop in between. Over and under pressure control can be handled either at the contactor or somewhere else in that pressure segment of the flow line. A check valve on the glycol

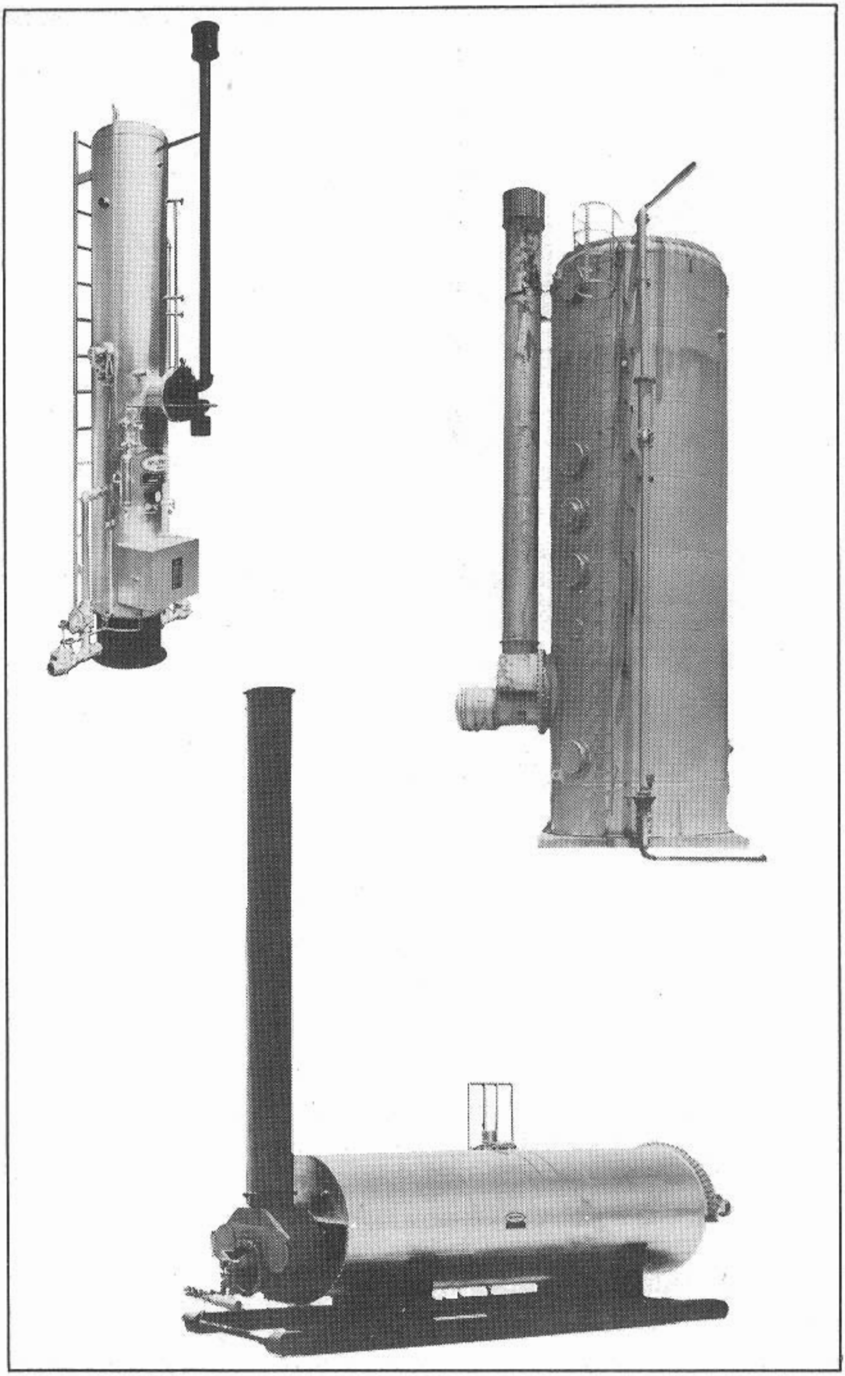

Fig. 6.14 *Heater treaters are identified by the stack and separator type vessel. Courtesy of METROL CORPORATION*

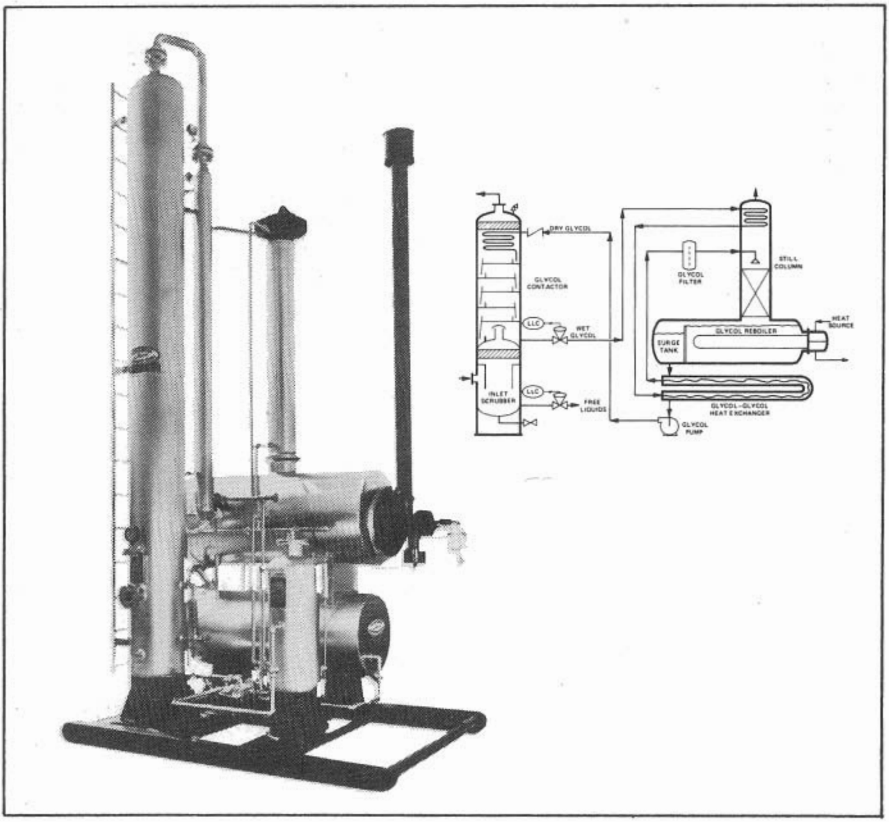

Fig. 6.15 *Glycol dehydrator. Courtesy of METROL CORPORATION*

inlet and a shutdown valve with a low pressure sensor (PSL) on the outlet can protect against failure of the piping between the contactor and the reboiler.

Recommended safety devices for glycol-powered glycol pump are shown in Fig. 6.16.

Since the reboiler is an atmospheric pressure fired vessel, all it needs is the usual fire protection.

Also available are solid desiccant dehydrators that use a regeneration cycle.

Low temperature extraction (LTX)

Low temperature can be used to improve the recovery of liquids, hydrocarbon, and water from gas. Where there is enough refrigeration

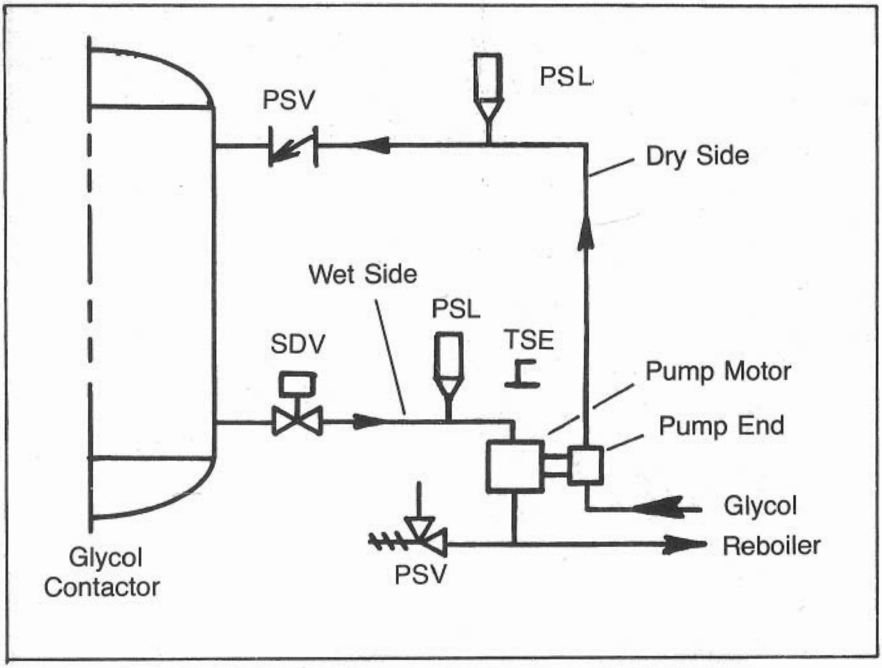

Fig. 6.16 *Recommended safety devices for glycol-powered glycol pump*

effect from gas expansion to justify the capital investment of equipment, an LTX unit (Fig. 6.17) can be used. Gas coming into the unit is cooled to remove liquids more completely than can be done at the lower pressure.

The unit is complicated somewhat by the need for temperature controls to keep the temperatures just above hydrate-forming temperatures so that the unit will not plug by freezing. Temperature control is accomplished by permitting cold gas to flow through the heat exchanger before it goes through the liquid knockout section.

There are several pressures involved in the unit. Well pressure is on the inlet. Gas sales line pressure is on the downstream side of the choke. Distillate is dumped into the oil line by a float-controlled valve. Water is dumped into the water disposal system by a float controlled valve.

In some cases, there also may be a flash separator to remove the vapors that boil off due to the reduced pressure of the oil sales line. The gas from the flash separator may have to be compressed into the gas sales line.

All these pressure segments need to be sensed and the sensors must appropriately control the safety system in the same manner as any other part of the system.

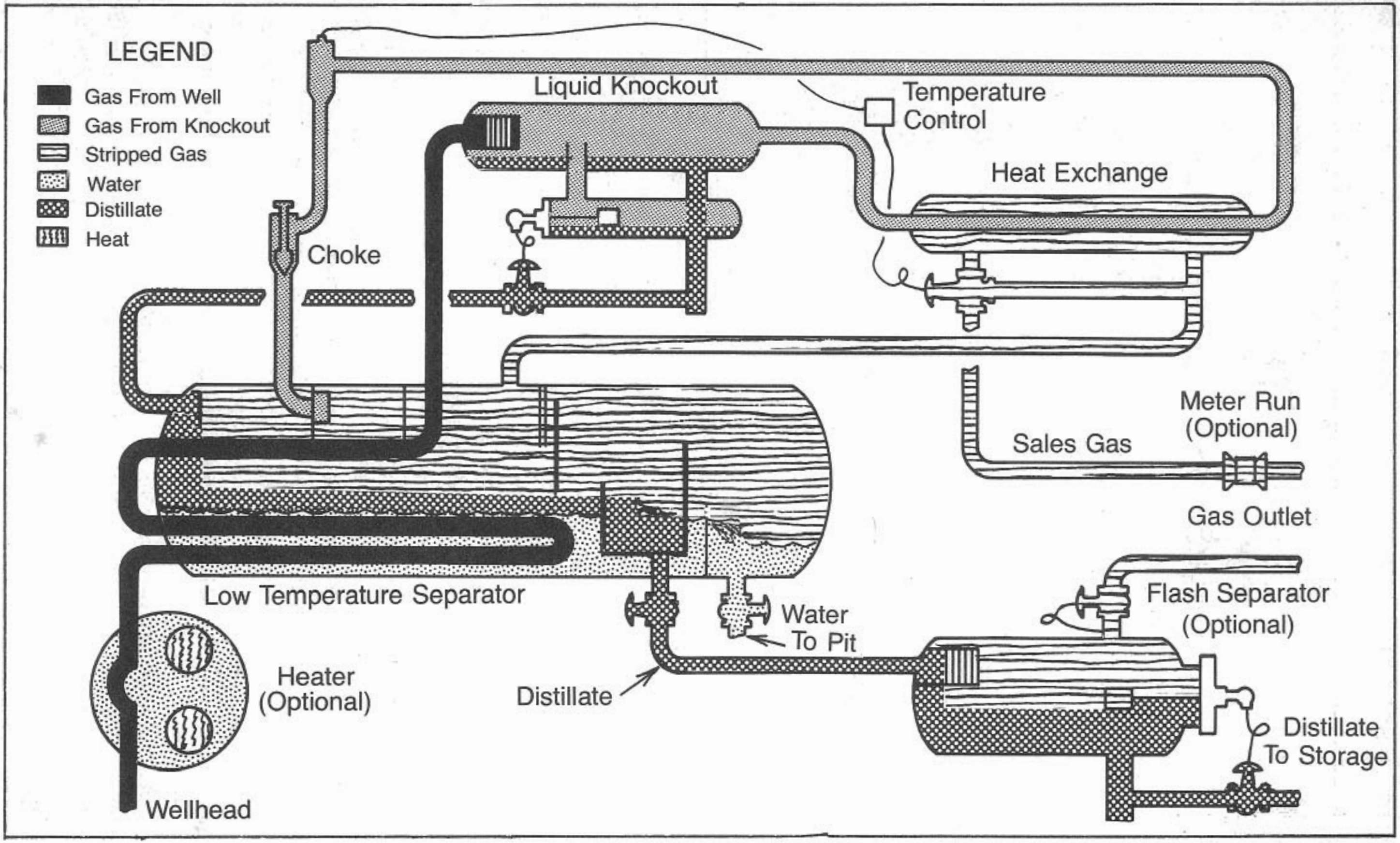

Fig. 6.17 *Low temperature extraction (LTX) unit schematic. Courtesy of C-E NATCO*

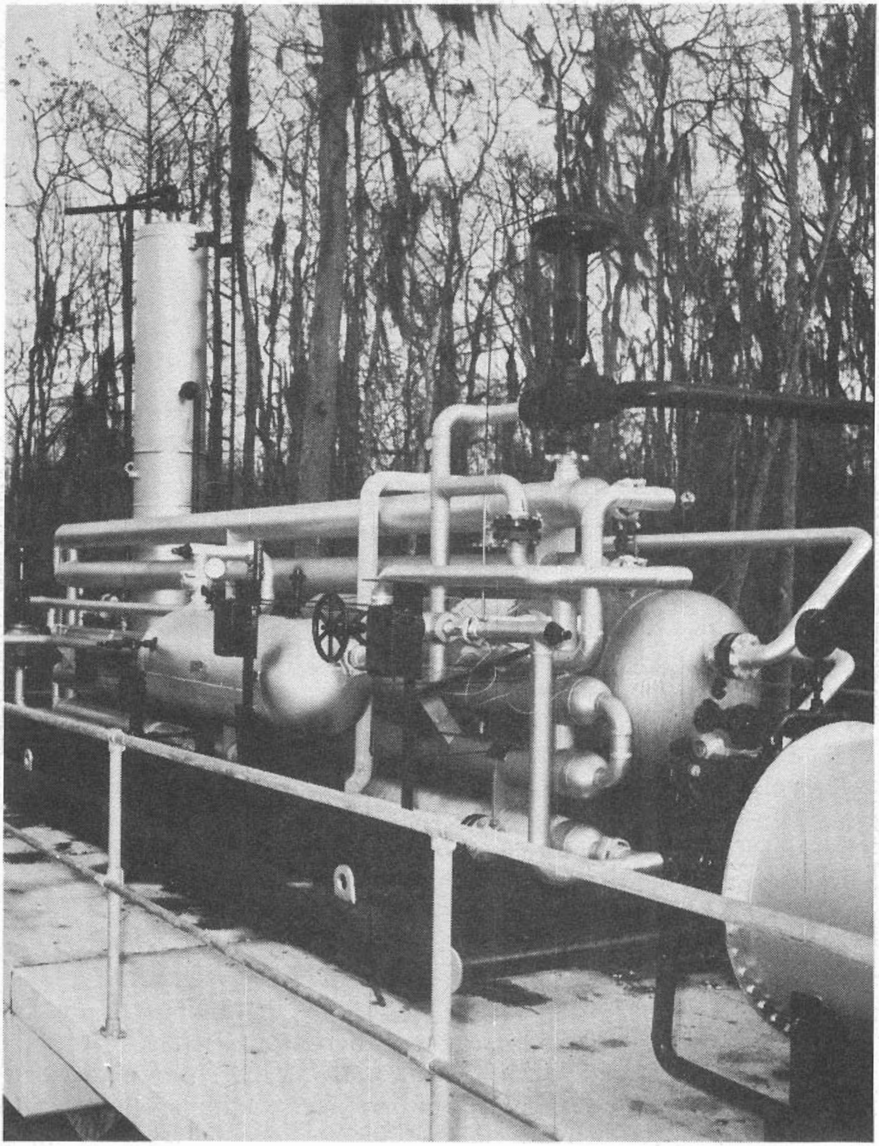

Fig. 6.18 *Low temperature extraction skid unit. Courtesy of C-E NATCO*

7

Valve Types and Application

The purpose of all valves is to control flow. Some are required to give a very good seal while others need only modulate the flow without an absolute seal. There are various types of valves (Fig. 7.1) including:

1. Poppet valve—Examples of poppet valves are faucets, needle valves, ball check valves, and most engine valves. A poppet valve has the valve member moving in the same direction as the flow.
2. Plug valve—A plug valve has the valve member rotate to cause the closure of the valve. The shape of the valve can be cylindrical, conical, or spherical. The important thing is that the valve member rotates, usually 90°.
3. Gate valve—Gate valves come in various types. The most commonly used is the rising stem gate valve that is not a thru-conduit type. This kind of valve is used for control of water supply, for example. The gate valve that is most commonly used on wells is a thru-conduit valve. Gate valves have the valve member (the gate) move across the flow to block it.
4. Spool valve (sleeve valve)—Spool valves are used extensively in the fluid power industry. The advantage of the spool valve is that a valve can be made with a wide variety of flow configurations. It can be three-or four-way; it can be balanced, therefore bi-stable.

A spool valve (Fig. 7.2) can be made with various types of actuators that need very little power to move the valve. Hydraulic spool valves often use a labyrinth type seal so that the clearances between the valve members and body are so small that any leakage is insignificant. With this kind of valve the forces required to form a seal are very low. Additionally, there is very little high pressure damage to sealing surfaces.

Pneumatic spool valves usually use an elastomeric seal to slide past

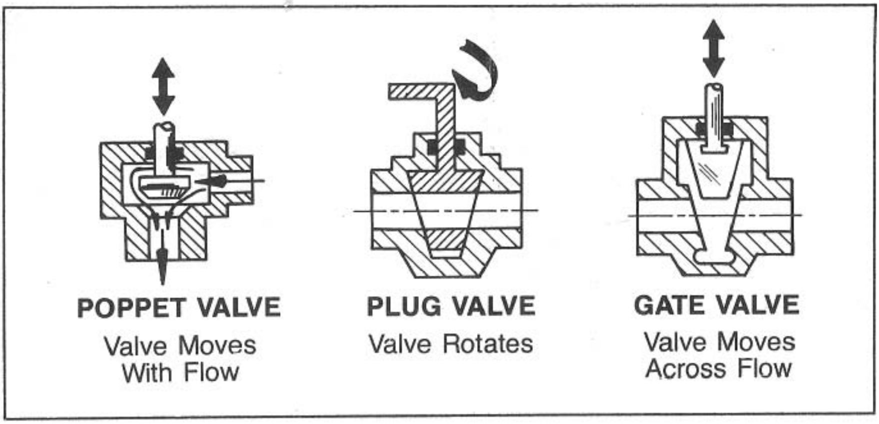

Fig. 7.1 *The main types of valves*

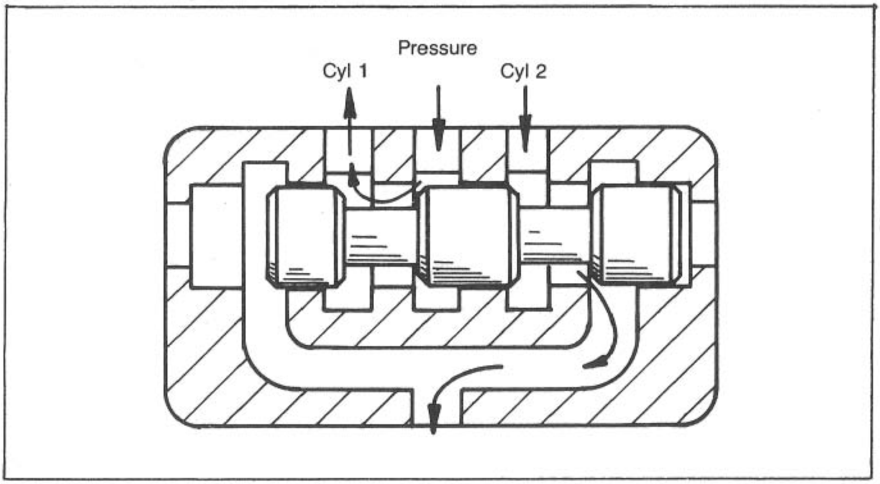

Fig. 7.2 *Spool valve*

ports or slots. These have a tendency to wear out, but the pressures are usually low enough that it is not an important factor in their usage.

5. Fluidic valves—A relatively recent development in valving is the use of the dynamics of flow for control. Fluidic valves normally are used only in logic circuitry. They have a great advantage in hazardous conditions where explosion proofing is a serious consideration. They are used extensively, for example, in munitions plants.

Fluidic valves are advantageous in that they can function in extreme temperature conditions and do not require much pressure. On the other hand, because they continuously flow, they are high power consumers. Unfortunately, the pressures involved in fluidics are quite a bit below those required for most safety valve systems.

6. Stricture valve—Stricture valves utilize a flexing member to contract to close off or restrict the flow. An example of a stricture valve is the annular blowout preventor.

7. Bladder valve—A bladder valve uses a flexing membrane to move against or away from a slotted or perforated surface. Pressure on one side of the membrane controls flow on the other side of the membrane. This type of valve has the advantage that a charged chamber can be used as a reference of pressure, thus giving some control characteristics that might be difficult to obtain otherwise.

Gate Valve Descriptions

The most common valves used for wellhead, pipeline, and safety shut-in are gate valves. They are advantageous in that they can be thru-bore. Also, sealing surfaces are protected from the flow of other fluids.

Gate valves normally are not throttling valves. They are either fully open or fully closed. They have smooth, round, straight bores and are designed to seal bubble tight.

Following is a discussion of the various features of gate valves and the ways they are described.

By design.

Conduit—The conduit of the gate valve (Fig. 7.3) is either thru-conduit or not thru-conduit. In the open condition a thru-conduit valve aligns a hole in the gate with the bore of the valve body, thus providing a smooth, unrestricted, non-turbulent wall for the flow of the fluids. This reduces erosion and flow pressure drop and provides a place for sand and paraffin. It also covers the sealing seats so that erosion of the seats is negligible.

Stem—Gate valves are made with non-rising stems, rising stems, and balanced stems, special configurations of rising stems (Fig. 7.4) Non-rising stem valves only have stem rotation. The translating thread is between the stem and the gate so that the only energy required to move the gate up and down is due to friction between the gate and the seat (while there is pressure across the gate).

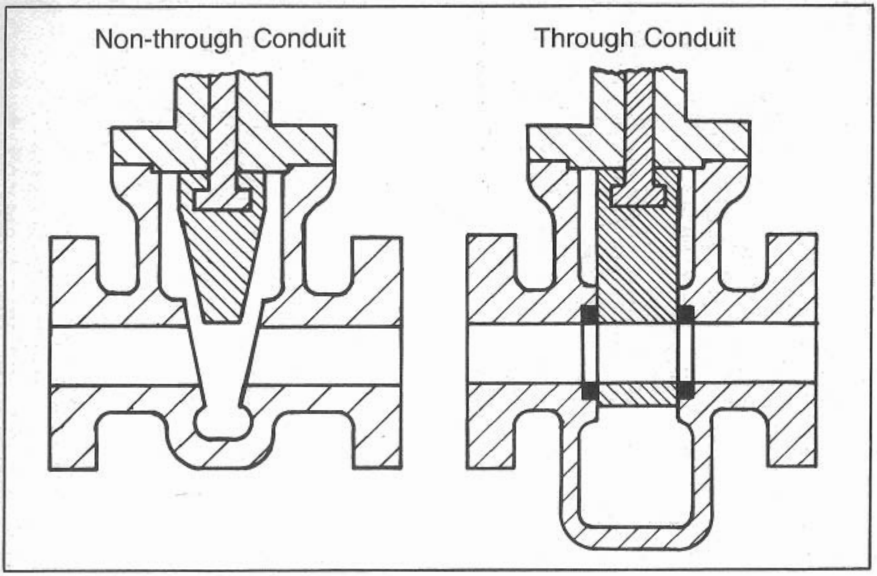

Fig. 7.3 *Gate valve conduit configuration*

The rising stem is threaded to a yoke on the outside of the packing and does not rotate. There is energy absorbed by the stem when the valve is opened and the stem is moved to the up position. This is due to the pressure against the area of the packed off portion of the stem exerted through the movement distance of the stem. That same work must be put back into the valve when the stem is moved to the in/closed position.

On large, low-pressure valves, this amount of work is relatively small. However, as the pressures increase, the amount of work involved in opening and closing the valve becomes very significant. For this condition a balancing stem sometimes is added to balance the force of the main stem in the opposite direction. The balancing stem extends with an equal force through the bottom of the valve. There is no net work required to move the gate to the open and closed positions.

The advantage of the balanced stem valve, like the non-rising stem valve, is that no work is involved in moving the gate. It has an advantage over the non-rising stem valve in that the translating thread is outside of the packing where it can be lubricated. Also, smaller bearings can be used. Of course, there is added packing friction.

Gate—Gates are either slab gates or wedge gates. Handwheel operated valves with wedge gates have the same advantage that needle

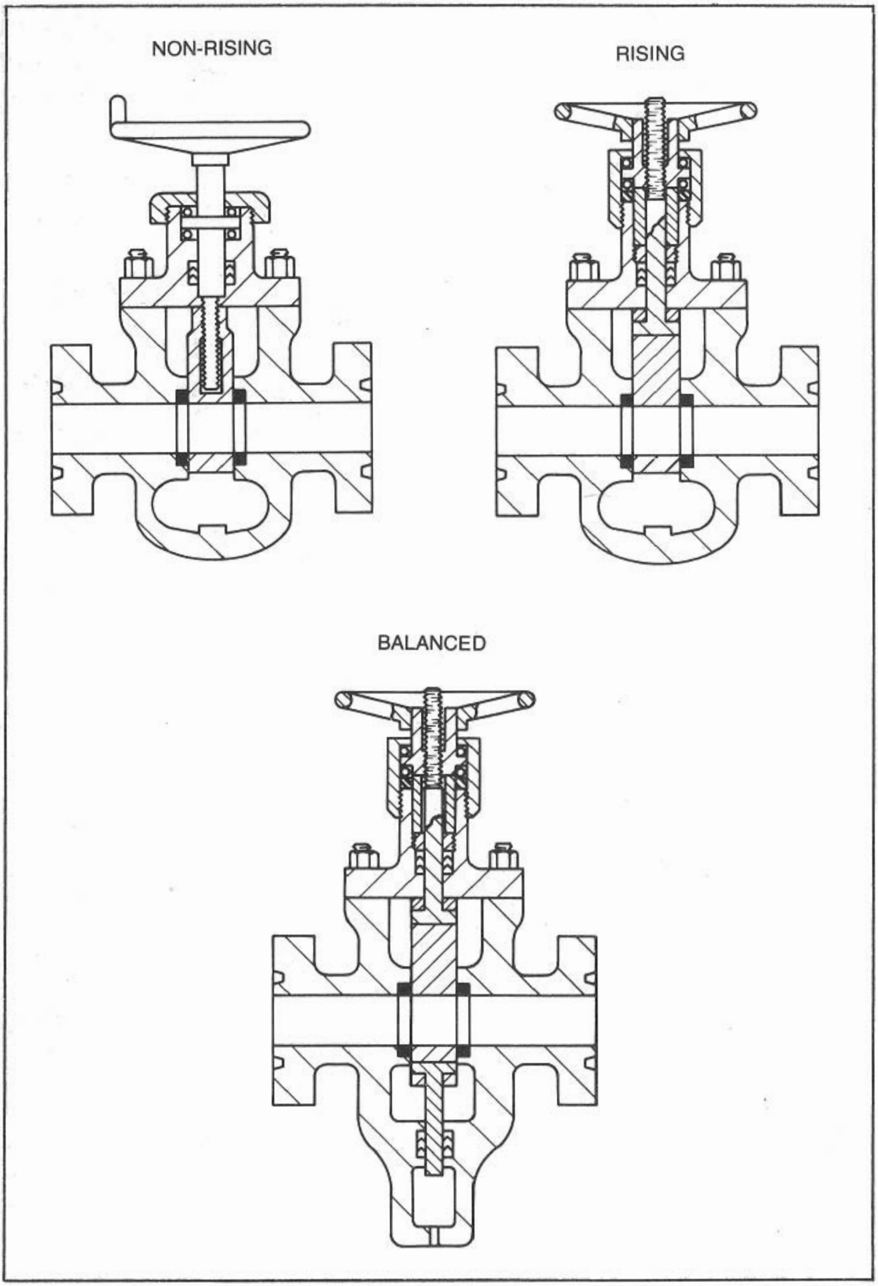

Fig. 7.4 *Stem configurations*

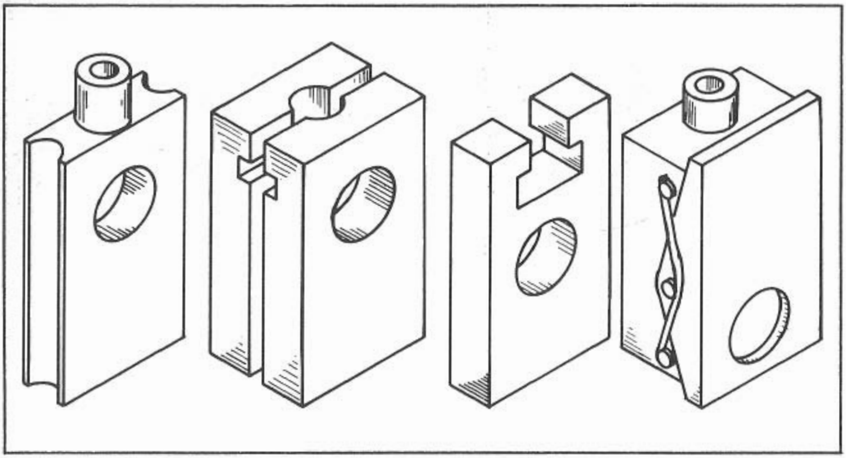

Fig. 7.5 *Types of gates used in production valves*

valves have. If the wedge gate valve tends to leak, the handwheel can be operated to tighten the seal between the gate and the seat in order to shut off any minor leakage.

Wedge gates cannot be used easily on a valve with an actuator since the forces required to close the valves are not controlled in an actuated valve in the same manner as they are in a handwheel valve. Therefore, the most common type of gates used for actuated valves are slab gates.

Gates may be single or split. The split type of gates are used where there is a wedge feature or where they are spring loaded to maintain intimate contact with non-floating seats. Non-wedging gates are used with reverse gate actuators. Sometimes wedge gates are used with direct acting type actuators.

Fig. 7.5 shows types of gates used in production valves.

Bonnet—Bonnets are described by the type of connection between the bonnet and the body of the valve (Fig. 7.6). Some are screwed on with a single thread, others are bolted. There is even a type that uses a reverse tapered bonnet gasket to hold the bonnet on. Bolted bonnets are the most common types.

Large and/or high pressure valves with screwed bonnets require too much torque to develop the forces needed to hold the bonnet to the body and maintain sealing stresses in the bonnet-to-body seal. Bolted bonnets have a distinct advantage also in providing orientation between the bonnet and the body, where this is important in the function of the parts.

Bonnet seal—For fire protection, it is most desirable that production

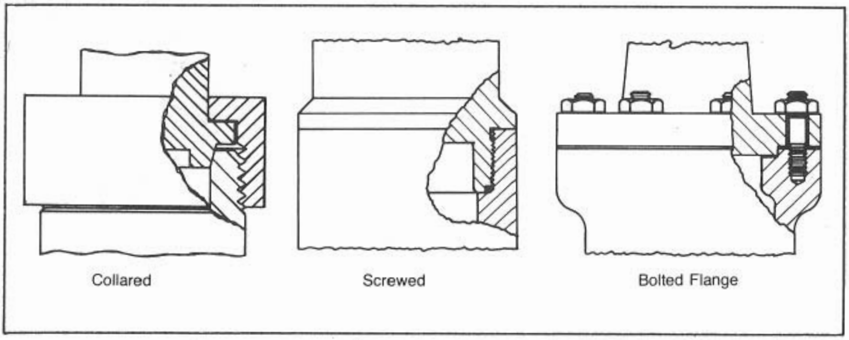

Fig. 7.6 *Types of bonnet connections*

valves have a metal-to-metal seal between the bonnet and the body of the valve. Most common are compression gaskets and conical rings. In some pipeline valves, and in at least one type of production valve, an O-ring seal is used between the body and the bonnet.

In some cases, the body and the bonnet are carefully machined with conical surfaces that seal. However, that is not so common as the use of soft metal gaskets that make up for the irregularities of the surfaces due to machining and the later damage. The soft metal gaskets can be formed to match the surfaces of the body and bonnet. Fig. 7.7 illustrates the forces required in a compression gasket type of seal.

In any type of seal a continuous compressive stress equal to or greater than the highest pressure must be maintained continuously

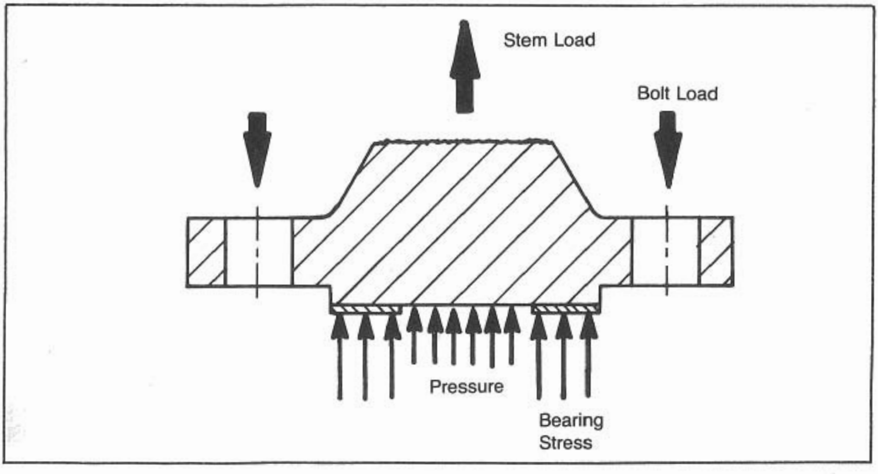

Fig. 7.7 *Bonnet loads*

throughout the sealing length. Otherwise, the seal will leak. It may not leak much, but it will leak.

Seats—Seats in production valves and pipeline valves may be floating, pressed in, or slipped in. The floating seat is used to permit clearance tolerances in the body, seats, and gates. It also permits the seats to stay in intimate contact with the slab gate while the gate moves back and forth due to the pressure forces upon it. The pressed-in type of seats usually use the interference compressive stresses between the seat and body for sealing.

Floating seats use an elastomer or plastic ring to do the sealing between the body and seat. One type of seat is pressed in but does not use the press fit stresses for sealing. It uses a plastic seal ring to seal between the seat and the body.

Gate to seat seal—Every valve is sold on the sealing gimmick used for closure. Various production valves use lapped gates and seats (metal to metal), plastic inserts, O-rings, sealant (auto or manual injection), and combinations of these. The lapped seat utilizes a carefully machined flat surface on the gate and on the seats. These seats usually are lapped separately to a very accurate flatness tolerance measured in light waves. Plastic inserts are used commonly to decrease the stiffness of the seating surfaces. They therefore require less accuracy.

The problem with plastic or rubber rings is that the plastic materials and elastomers are very much weaker than metal. When the valve is being opened or closed with flow and pressure difference across the gate, the flow tears the plastic and causes premature failure. O-rings are used as the sealing surface in one brand of valve, much the same as plastic inserts are used. The main advantage of the O-ring is its cost and easy replacement.

Some valves use a liquid to get a seal between the close fitting surfaces of the gate and seat. There are two methods of sealant injection. One is automatic, with a reservoir that is filled periodically every 50 to 100 operations of the valve. Pressure difference across the gate injects the sealant into the sealing groove. Other valves have the sealant feature as a back-up to the primary sealing mechanism, such as a plastic insert. The back-up systems require manual injection of the sealant to stop a leak. These units use two types of sealing mechanisms, such as lapped seat and sealant injection or plastic ring and sealant injection.

By specification.

Valves are described by the specifications to which they are manufactured. API production valves and drilling-thru valves are specified in API Spec. 6-A. API Spec. 6-D is an equivalent specification for pipeline valves. API Spec. 14-D is the specification for the design of surface safety valves.

Most process equipment utilizes valves that are made to ANSI specifications. NACE has written specification MR-01-75, which is an additional specification to either API or ANSI valves. Customers also have their own special requirements. These are usually in addition to API, ANSI, and/or NACE specifications. And, of course, there are combinations.

By configurations.

By far the most common type of valve is the single valve. In it, the valve body has one conduit, a connection on each end, and one gate. In oil field production, there is also a need for more than one conduit for producing more than one zone of oil or gas. This means that the flow conduits must be parallel but each must have its own individual gates and seats, but with a common body.

Several valve configurations available are shown in Fig. 7.8.

There are several wellhead Christmas trees which are manufactured with multiple conduits. One type of tree is made of several valves that are welded together using short pieces of pipe. To get the conduits closer together, each of these valves is made with a recessed body.

This type of tree is not as strong as the block valve or block tree (composite tree). A block valve is a valve body with a connection on each end and two or more parallel conduits. The valves are set in the body so that the conduits can be placed as closely together as possible. A dual block valve normally will have the bonnets of the two valves pointing 180° apart. They will be slightly offset so that there is a minimum length of valve between the end connections.

Triple valves would be set 120° apart and; of course, quadruple valves would be set at 90°.

Multiple completion trees are fabricated with two or more of these block valves. Upper master valves may have the tee ("T"), or cross, built into the upper connection. However, the bottom valve would be connected to the top valve with a flange connection. The bottom master valves have special pockets machined into the connection for sealing with various tubing strings in the tubing hanger.

To handle the large size needed for multiple conduit connection, the flanges are usually six, eight, or ten inches in nominal size. This large end flange usually will mean that an actuator of the reverse acting pneumatic type will have to be extended from the bonnet flange in order

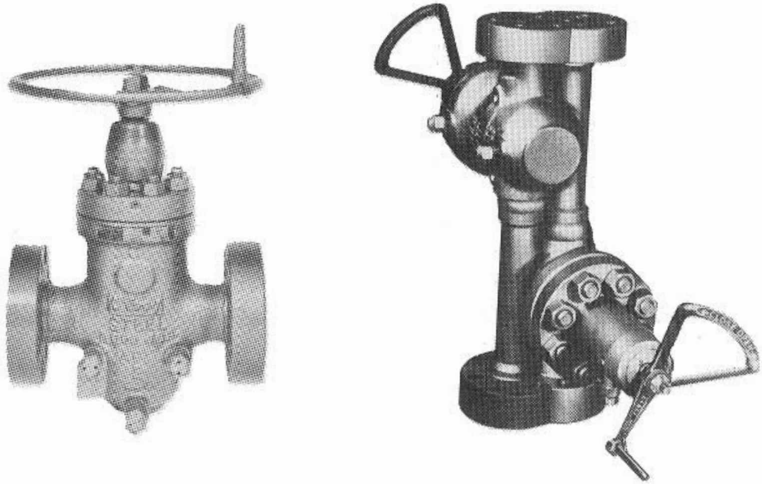

Single Valve

Recessed Body Valve (Dual)

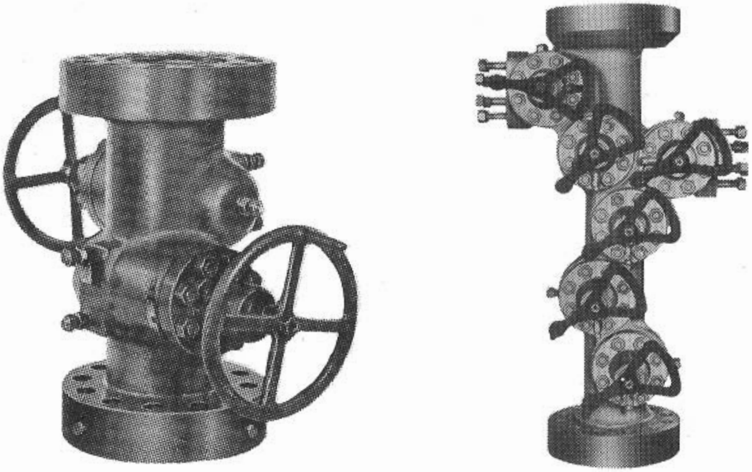

Block Valve (Dual)

Block Tree or Composite Tree (Dual with two master valves)

Fig. 7.8 *Valve configurations. Courtesy of McEVOY, W-K-M* to not interfere. Trees fabricated from block valves often become very large and costly.

The connections between the valves sometimes will cause leaking problems. To reduce this, composite trees, or block trees, have become popular. Even single trees are made as composite trees, because the size of a Christmas tree is as small as possible and reduces the hazard of flange failure during fires.

The minimum size of the tree normally is determined by the diameter of the bonnets of the valves. To keep all the controls on one side and to make manufacturing easier, the bonnets of all the valves on the block or composite tree are usually on one side of the tree.

Composite trees can be bought in various sizes, pressure ranges, and valve arrangements. Some are single trees and some are dual. Some trees have one master valve and some have two. They come with and without wing valves and swab valves. The extreme compactness of the composite tree makes adapting pneumatic actuators difficult, especially on dual trees where the actuators should be in both of the upper master valves of the tree.

By size.

Traditionally, valves have been referred to by a nominal size. That is, sizes have been approximately the dimension of the inside diameter of standard weight pipe (through 12-in. nominal size). Fourteen-inch and larger pipe is referred to by the nominal outside diameter.

Production valves of 2,000, 3,000, and 5,000 psi working pressure which were made to API 6-A specifications were referred to in the specification by the nominal size of valve; that is, 2-in. 2½-in., 3-in., etc. Some valves of reduced port, regular port, had a combination size rating, such as 4-in. x 2½-in. or 2-in. x 13/16-in.

The first number refered to the nominal size of the end connection. The second number referred to the actual or nominal bore size of the valve. Thus, a 2-in. x 1 13/16-in. valve had a 2-in. flange and a 1 13/16-in. bore. The 2-in. x 1 13/16-in. valves were introduced as low price items where a full port valve was not needed. There was little or no manufacturing cost difference so they were removed from the market in order to reduce inventory. They now are obsolete, listed as inactive.

Exceptions to this nomenclature are the 6-in. × 6-in. and 6-in. x 7-in. drilling-thru valves. The 6-in. x 6-in. drilling-thru valve has a 6-in. nominal flange and a 6⅝-in. bore, whereas a 6-in. x 7-in. drilling-thru valve has a 6-in. nominal flange, but a 7⅛-in. bore.

For pressures of 10,000 psi and greater, the flanges and valves made to API Spec. 6-A are referred to by the actual bore of the valve. Such flanges are called 6BX flanges and use a pressure energized ring gasket, which is different in design from the ring gasket connection of the lower pressure rated flanges.

The practice of referring to valve and flange sizes in the lower pressure ranges, 2,000 to 5,000 psi, has not been used universally in the various catalogs of manufacturers of wellhead equipment. Some have used the actual bore designations, such as 2 1/16-in. and 3⅛-in., to indicate the actual bore of the valve instead of the nominal size of the valve.

As of the 1977 API Spec. 6-A, valve and flange sizes have been redesignated by actual bore. Nominal sizes were discontinued at that time.

Prior to the present practice of referring to the actual pressure rating of wellhead equipment, API used a modification of the ANSI pressure rating system. A 5,000-psi working pressure flange was referred to as a 1500 Series flange. A 3,000-psi working pressure flange was referred to as a 900 Series flange.

Since ANSI did not have flanges for use at 10,000 psi and higher pressures, API used the same design practices as used in the lower pressure ranges and designed a special series of flanges for the higher pressure ranges. They referred to this series of flanges as the 2900 Series. These flanges were of reduced port so that a 2-in. valve actually had 1⅝-in. nominal bore size, and the actual bore size was 1 11/16-in. When API accepted the new series of high pressure flanges as designed by the Association of Wellhead Equipment Manufactuers (AWHEM), they set up a 1 11/16-in. bore size. This was to replace the old 2-in. 2900 Series flange.

Later, as 2 1/16-in. OD tubing became popular, a new size of valve was needed to take care of the 1¾-in. nominal bore tubing. A 1 13/16-in. size was designed. In most cases, the valves already designed were simply made ⅛-in. larger in diameter. All other portions of the design remained the same.

This 1 13/16-in. size quickly replaced the 1 11/16-in. size and the 1 11/16-in. size became obsolete.

By pressure rating.

As mentioned in the discussion on size, pressure ratings have gone through several evolutionary stages. The steam power ratings were adapted to "series" designation; later, actual working pressures were used for production valves. Pipeline valves, API Spec. 6-D, have retained the ANSI type of philosophies. These ratings changed in the mid 1970's to follow changes in ANSI B16.5 specifications.

Production valves have specified test pressures that are different multiples of the working pressure. Below 10,000 psi, the test pressure is twice the working pressure. For 10,000 psi and above, the multiple is 1½, i.e., 15,000, 22,500, and 30,000 psi. For 30,000 psi, the margin of difference was reduced even more—to 1.25:1, 37,500 psi.

Test pressure is the pressure to which the body and bonnet, the pressure vessel, is subjected in order to provide some margin of safety above the rated working pressure. These margins reduce at the higher pressure since the valves are less likely to be over-pressured accidentally. Also, thick wall pressure vessels become very thick when design pressure is close to material strength.

ANSI valves have a complex pressure rating system based upon the particular material used on a given pressure class configuration.

By make and model.

There are at least 11 companies that manufacture gate valves for the oil field production and pipeline business. The 11 different manufacturers have in excess of 33 different models of gate valves in service that can be used as safety valves.

Sometimes model differences within one manufacturers's product line indicate modernization redesign. Sometimes the differences are for more optimum design configurations for ranges in size and pressure. For example, it is not uncommon for a company to use a balanced stem design for high pressure valves but not for lower pressure valves. A company might have different model designations for API than for ANSI valves to emphasize the requirement differences even though the valves may be dimensionally identical in the smaller sizes.

As valve sizes increase, the manufacturing practices change, and thus, so does the design. These differences include the use of castings, forgings, rolled or forged plate, flat plate, or combinations of these fabrication techniques. Sometimes a valve model will have a sub-model designation describing an option, such as type of gate.

By service.

The type of service in which the valve will be placed will determine the types of materials used. All API valves have steel bodies and bonnets. But for noncorrosive service, the gate and seat are either a carbon steel or low alloy steel.

In mildly corrosive service the body and bonnet may be of carbon or low alloy steel, but internal parts may be of corrosion resistant materials like stainless steel and Monel. For severe weight loss corrosion service, the body and bonnet would be of stainless steel also.

The stainless steel used for bodies and bonnets is a 12% chromium stainless steel, referred to as AISI 410, or an ASTM grade that is referred to commonly as CA15. In some water injection systems, austenitic stainless steel may be used for the sealing surfaces.

Corrosive service usually implies a weight loss type of corrosion that is aggravated by carbon dioxide and salt water. Hydrogen sulfide also tends to increase the weight loss type corrosion, but the most serious problem with H_2S is sulfide stress cracking.

Sulfide stress cracking occurs where there are tensile stresses in the metal, the well fluids are acidic, and temperature is below 175°F. Sulfide stress cracking is serious particularly because the fracture is a brittle fracture, failure is sudden, and the released fluids are poisonous.

Brittleness problems also occur in cold service. API 6-A specifies that standard equipment made to those specifications will be ductile down to −20°F.

By end connections.

For oil field service, the most common end connections are flanges. API Spec. 6-A allows only flange connections with ring joints. ANSI valves can be supplied with ring joint flanges or raised face flanges. When a valve is specified to have flanged ends, care must be taken to specify what type of flanged ends are to be used for ANSI valves.

Screwed end valves normally are used only for lower pressures. They can be supplied with API line pipe threads, API tubing threads, or National Pipe threads. A screwed end designation is not complete until the type of thread is specified.

Valves may be supplied with special proprietary connections or clamp connections. Pipeline valves quite often are supplied with weld end connections. Sometimes there are special requirements for transition pieces to be welded on that are made from the same kind of pipe that is going to be used in the pipeline construction. The transition pieces reduce welding problems in the field.

By adaptions for actuators.

Although the descriptions thus far have been applicable to all valves, special consideration must be given to valves which are to be used as parts of surface safety valves.

Safety valves consist of a valve and an actuator. The valve portion is not a complete assembly. It must be completed by the actuator. For this reason, valves which are to be used as safety valves must be made without the handwheel actuator parts. Any specially designed parts, such as gates or stem-to-gate connectors, must be specified for adaptation to the intended actuator.

It usually is not practical to convert an existing handwheel valve for use on a reverse acting SSV. Too many parts are discarded in the process.

8

Valve Actuators

Gate valves are closures. Energy must be applied to open and close the valves. Gate movement is linear. A type of power that is inherently rotary must have some mechanism that changes rotary motion to straight line motion to actuate a linear acting gate valve. The type of actuator used will depend upon the type of power available and the type of operation needed.

Handwheel

The most common type of power used to operate a valve is hand power (Fig. 8.1). It has several advantages. It gives valuable force feedback information that makes wedge gates practical. The maximum force that can be applied to the wheel may become a serious disadvantage on large and high pressure valves.

The screw thread mechanism used is a very inefficient one. Only a limited mechanical advantage can be built into it. Past some limit it becomes more efficient to use a gear reduction to reduce the required force to that which a man can provide.

Electric actuator

Electric actuators (Fig. 8.2) are geared electric motors taking the place of a person's hand on a handwheel.

Like handwheel actuators the electric actuators are stable in any position in which they are left. Power must be applied to operate them. Adaptation to existing valves is easy since the entire actuator is outside

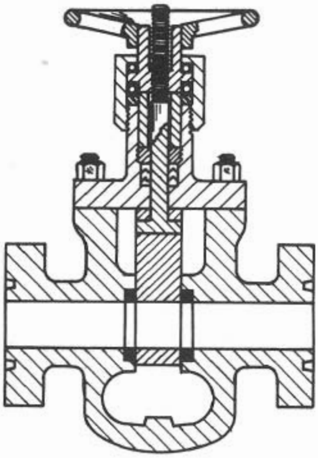

Fig. 8.1 *Handwheel operated valve*

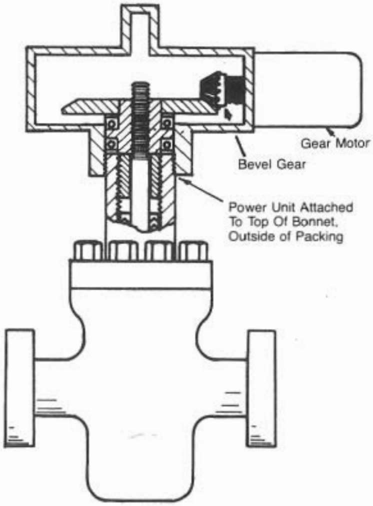

Fig. 8.2 *Electric actuator*

the pressure vessel. Limit switches are used to turn the motor off at the end of the stroke.

Pneumatic or hydraulic push-pull

Fluid power is a convenient power for an actuator. Since a pressure powered piston is a linear actuator, the valve requires a linear actuator. Fluid power has the added advantage that a lot of force can be developed in a small simple package with the use of high pressure.

A push-pull cylinder (Fig. 8.3) normally requires four-way control valving and normally is not fail-safe. Some applications need not be fail-safe. For some routine production controls, such as switching valves on a header manifold or choke-kill manifold, fail-safe may mean fail-open or fail-closed, depending on the situation.

Line pressure operated and piloted

Force needed to actuate a gate valve increases as pressure difference across the gate increases. The principle force that must be overcome

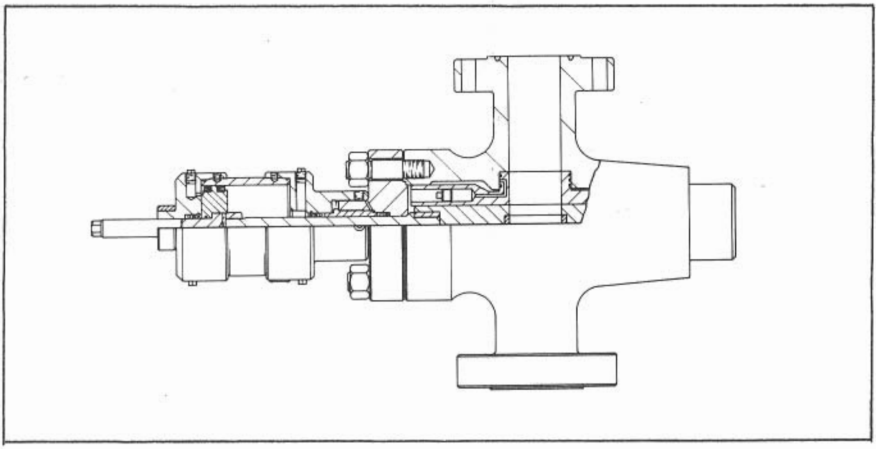

Fig. 8.3 *Hydraulic piston "push-pull" actuator*

with the actuator is the sliding friction between the gate and seat due to pressure difference across the gate on the sealing area at the seat.

If the same pressure that produces the drag is used to produce the power, then the force increases as it is needed. Very little extra force needs to be absorbed with the mechanical structure.

The earliest actuators for safety valves had a piston in a cylinder attached to a regular acting (down-closed) gate valve. Pressure was brought through a hollow stem into the chamber above the piston. The same pressure also was admitted to the chamber below the piston. When the pressure was equalized across the piston, the valve tended to remain open due to flow line pressure acting upon the area of the upper stem (which extended through packing).

Fig. 8.4 is a direct acting line pressure operated and piloted surface safety valve.

Pressure was admitted to the lower chamber through small holes in the lower stem in the old type safety valves. But in later designs the pressure was admitted from the upper chamber through an outside bypass line.

A velocity check valve in the bypass line is designed to make up for minor leakage; however, it closes when the pilot actuates to bleed the pressure from below the piston. Bleeding of pressure from below the piston provides the force that closes the valve.

To reopen the safety valve the pilot is reclosed, locked out of service, and pressure is equalized across the piston with the bypass valve on the velocity check valve. To overcome gate friction, the stem is started upward with the screw jack feature of opening handle and spacer.

Pilots for this type actuator are ball and seat poppet valves designed to balance pressure loads with spring loads in the monitor-actuator

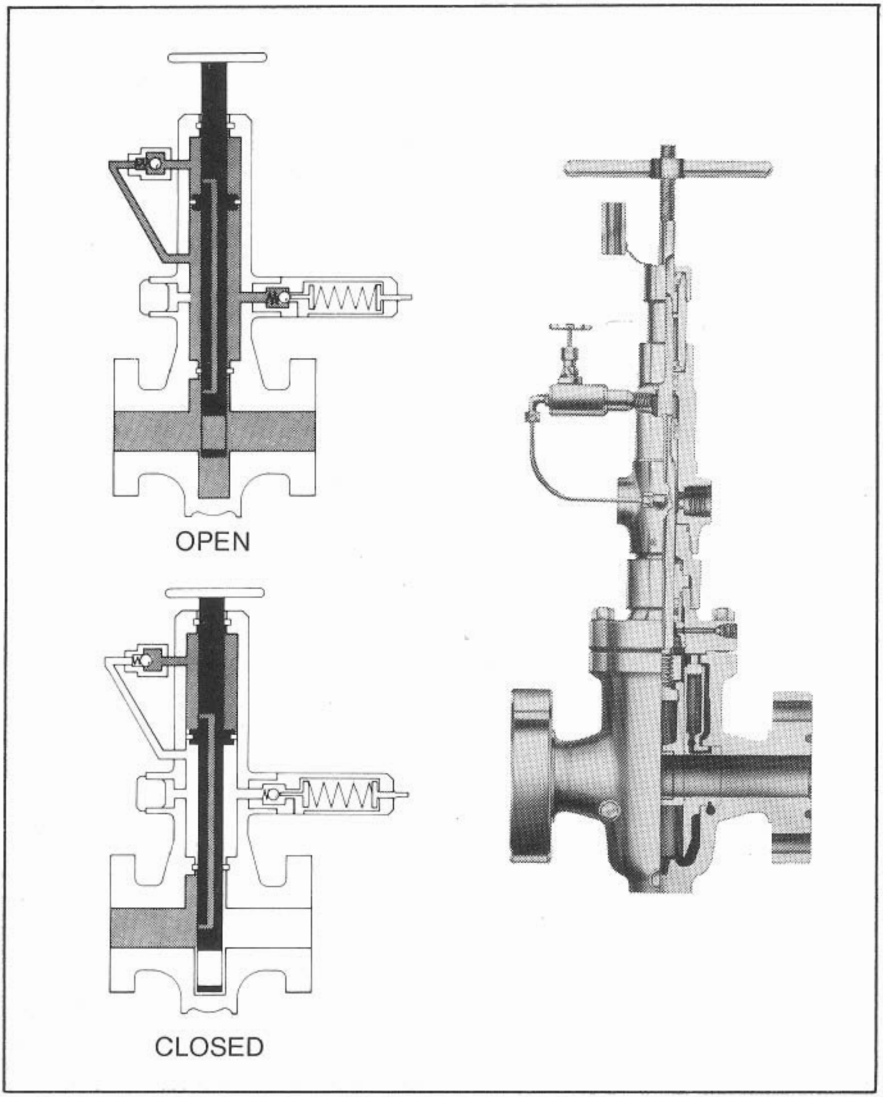

Fig. 8.4 *Direct acting, line pressure operated and piloted surface safety valve*

pilots. Actuator pilots hold the ball on seat with force from a piston or diaphragm.

The low pressure pilot has pressure to hold the ball on seat and a spring to bias it off seat. When pressure decreases to the point where holding force is less than spring force, the pilot valve snaps open. Snap action is important to reduce damage to the sealing surfaces.

On the low pressure pilot, snap action is an inherent feature in the design. Snap action for the high pressure pilot has to be built in. Pressure tends to push the ball off seat against the spring force on the high pilot. When the forces are nearly equal, some leakage will occur. The fluid that leaks past the seat will begin to build up pressure against the plunger holding the ball on seat. Since the plunger is much larger in area than is the seat, the small leakage pressure will tend to lessen the force holding the ball on seat, thereby increasing the leak and further pushing the plunger off the ball until the ball and plunger finally snap back off seat. A latch then will catch the plunger to prevent reseating.

This type of surface safety valve was originally only a direct controlled type of SSV with low and high pressure pilots. Only pressure at the safety valve could be sensed. The need for remote sensing promoted the design of the high pressure remote system. With this system, pressure downstream of the choke can be sensed and can control the safety valve upstream of the choke where pressure for actuation is more dependable, since only pressure actuates the valve.

Low pressure systems, 15 to 30 psi, soon followed to reduce the problems with freezing and interfacing with other systems such as the emergency shutdown system (ESD).

Size of the actuator seldom limits where the actuator can be used.

Later developments in piloting have combined the bleed function with the check valve operation. This permits building the internal bypass line to reduce the danger of the small line breaking and causing injury. Even though bypass line failure is fail-safe as far as closure is concerned, it sometimes is considered fragile for Christmas tree use.

The internal bypass also offers the opportunity to remotely automate the closing and opening of the SSV. To provide the reopening force needed to slide the gate with full differential pressure across it, the upper stem diameter is increased in some versions.

For ease and simplicity of control, automatic reopening is a feature that is desired by the person using it as well as in order to have the capability to automate. The advantage is even more pronounced on large valves.

Even after the development of the ratio piston reverse acting valve

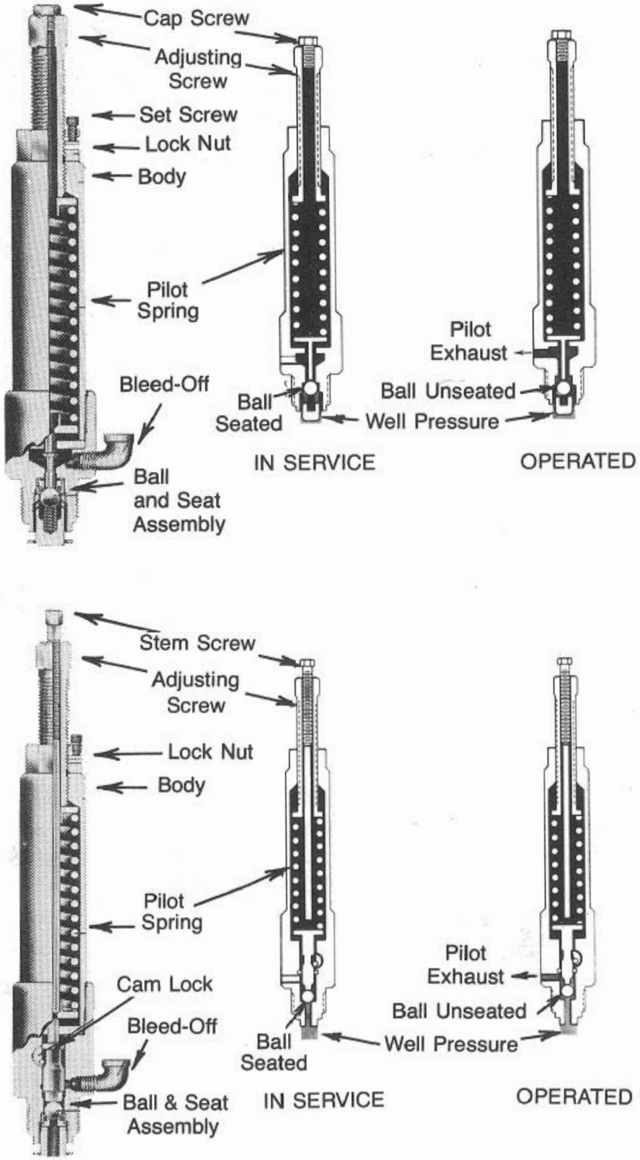

Fig. 8.5 *Direct control bleed pilots*

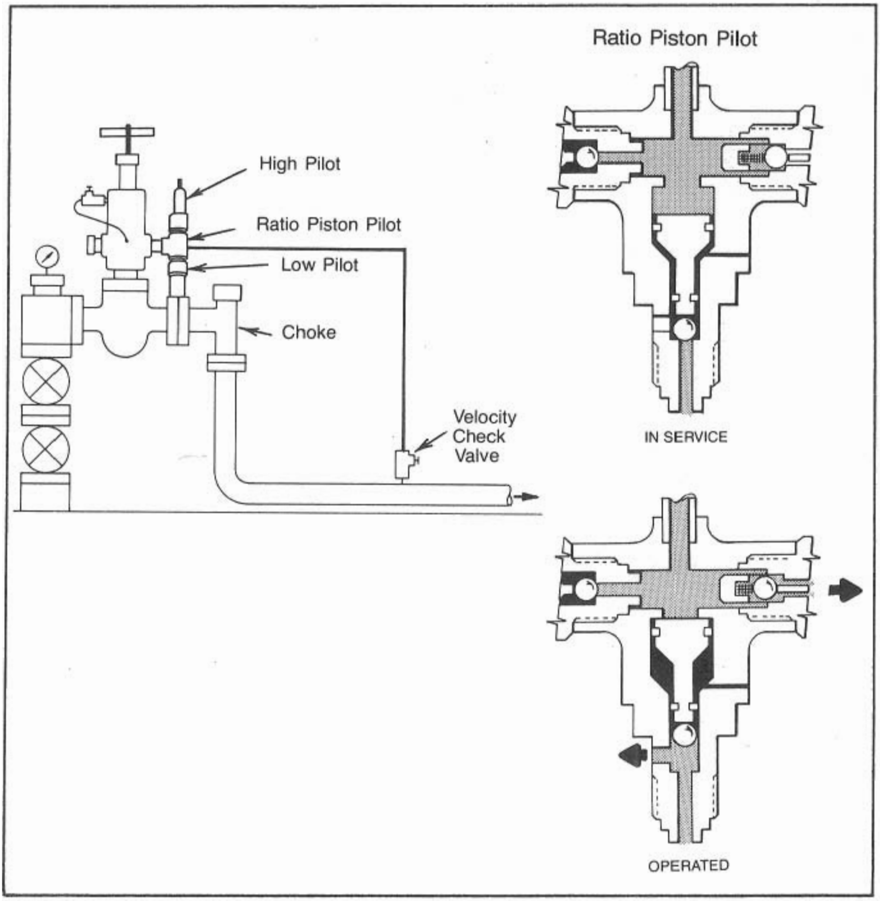

Fig. 8.6 *High pressure remote sensing system*

actuator (which uses external power to hold it open), the need for a line pressure operated direct controlled safety valve persisted. This brought about the design of the reverse acting gate valve actuator that is powered and controlled by line pressure (Fig. 8.8). It looks like a hydraulic SSV (low ratio, ratio piston actuator) but it is piloted like the earlier regular acting actuator.

This actuator is adapted to a reverse acting (up-closed) thru-conduit gate valve. Valve body pressure operates against the oversized lower stem area to close the valve. Pressure on top of the piston pushes the gate to the down-open position. The SSV takes pressure either from upstream of the upstream seat in a floating seat valve to insure that

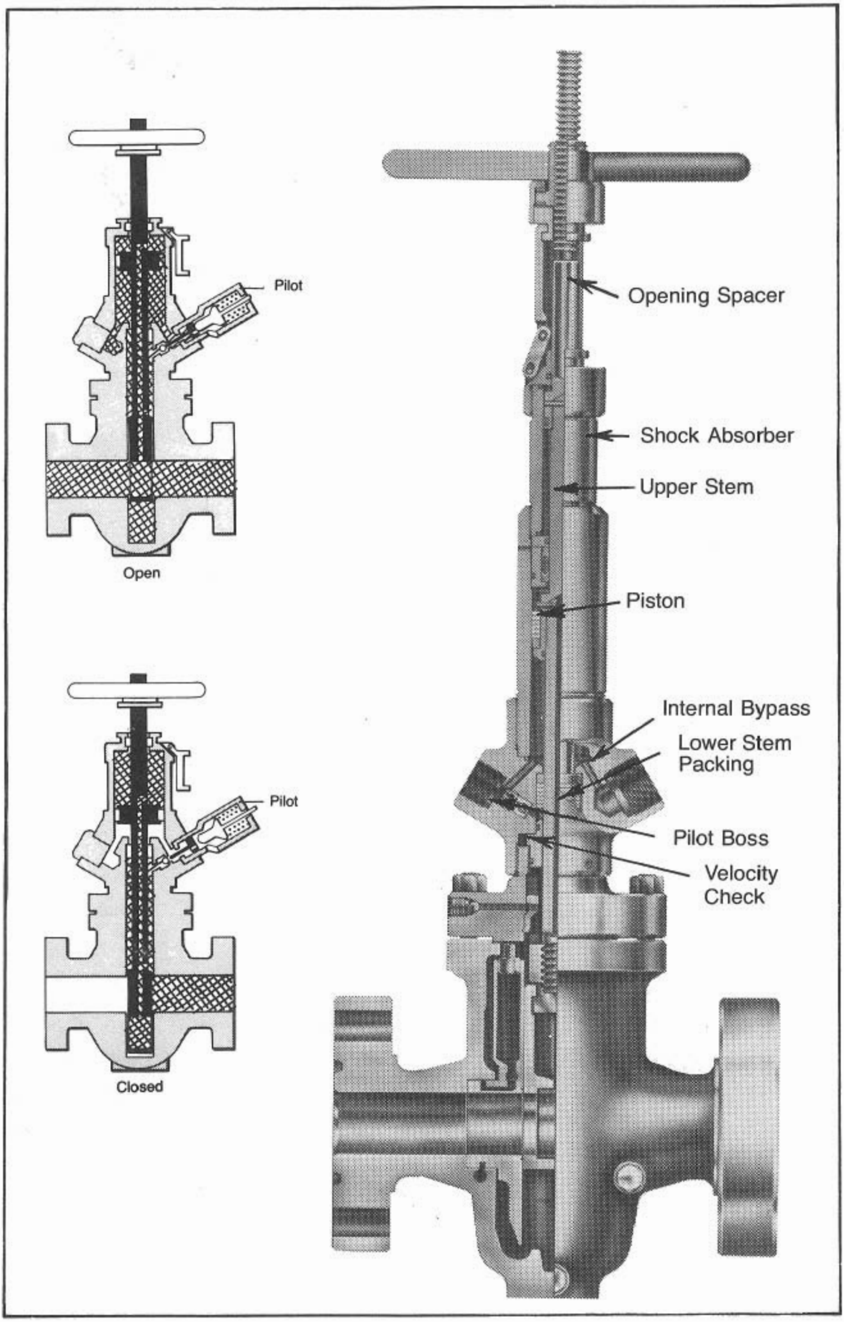

Fig. 8.7 *Line pressure type controlled and piloted surface safety valve with internal bypass*

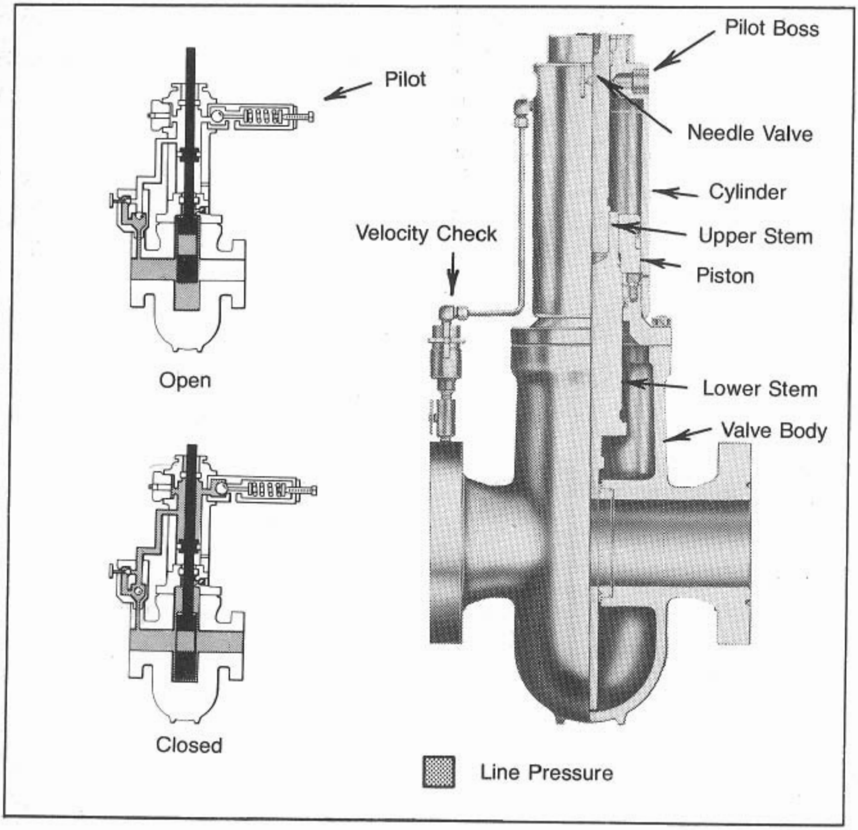

Fig. 8.8 *Reverse acting valve powered and controlled by line pressure*

reopening pressure is available, or from the body cavity of a split gate valve to prevent pressure lock during opening.

The velocity check valve is at the body port where the pressure is tapped to insure fail-safe closure in case the small bypass line fails. Pilot valves are screwed into the cylinder above the piston.

The force to operate the SSV (Fig. 8.9) is supplied by pressure acting against the lower stem (closing) and piston (opening). The main force needed is for sliding the gate with full differential across it. The diameters of the stems and piston are sized to provide the required force in the normal operating pressure range.

When pressures are expected to be very low and when fail-safe closure at zero line pressure is required, a spring closure feature can be added. The added closure feature has a price. Added cost is obvious, but there also is a space premium that may be a problem.

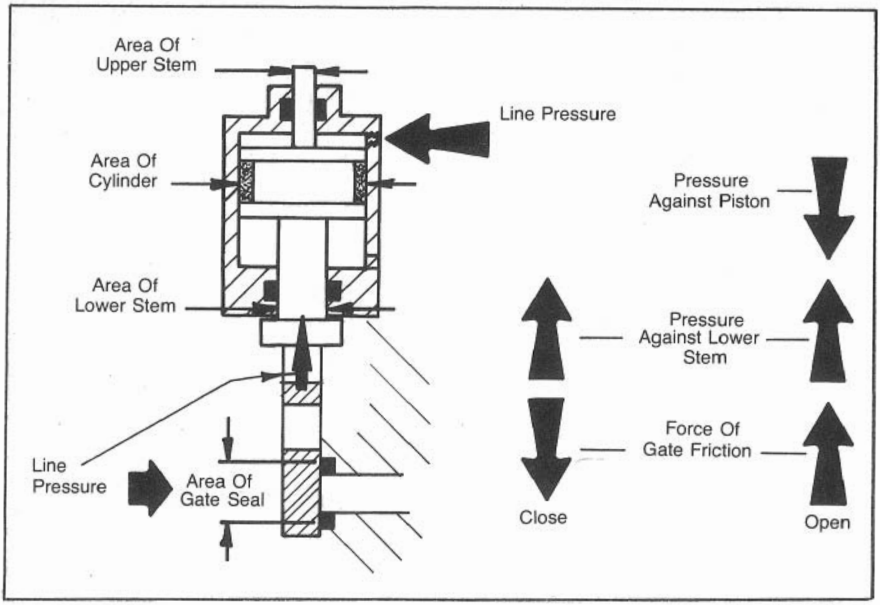

Fig. 8.9 *Main forces of reverse acting line pressure controlled surface safety valve*

Minimum operating pressure may be a limitation, too. The spring limits minimum pressure for staying open, not closing. The lower the pressure that a valve must have to stay open, the larger the piston must be. This larger piston may add more to the cost than the addition of the spring, stem, and housing in the spring closure unit.

Actuators generally exhaust pressure rapidly. This sudden pressure difference can cause a lot of extra energy to be put into the moving parts in the form of velocity or kinetic energy. At the end of the stroke the moving parts must be stopped. Unless the speed of the parts is limited, impact on the stop at the end of the stroke can cause damage.

The best way to limit speed is to control liquid flow with an orifice. Hydraulic shock absorbers, consisting of leaky pistons operating in an oil filled cylinder, can be built into the actuator. An extra cylinder must be built onto the regular acting actuator, but the spring housing usually is used on the reverse acting actuator in order to allow use of the same parts for multiple purposes.

Stem diameters must be the same at both ends of a shock cylinder in order to prevent pressure locking. There also must be a bleed-off port between the cylinder packing and the shock cylinder packing to prevent pressuring up the shock cylinder and having the combined line pressure and dynamic pressure in the shock cylinder.

Where the valve is handling only liquid, the speed can be limited with an orifice on the pilot exhaust. Hydraulic limiting is a good method because the retarding force is proportional to speed and the forces developed can be very large automatically.

Ratio piston line pressure close/external pressure open

By far the most popular type of SSV actuator used in oilfield production service is the ratio piston type for reverse acting (up-closed) gate valves. This type of actuator has an oversized lower stem that valve body pressure pushes out (up) to pull the gate to the closed position. The valve is opened and held open by pressure on top of a piston that is pushing down (Fig. 8.10).

The force up for closing must exceed the combined downward forces of:

1. Sliding friction of the gate moving across the seat with pressure difference across the gate. The most critical condition is when the valve is not quite fully closed and yet the full working pressure is acting against the full maximum sealing area. This sliding friction is proportional to the pressure in the valve.
2. Sliding friction of seals due to the addition of pressure. This force is also proportional to pressure in the valve.
3. Sliding friction due to mechanical makeup of the parts. This force does not change with pressure in the valve but may be considerably different from valve to valve.
4. Weight of the moving parts, if the valve is oriented so that the stem moves upward.

When the valve is reopened, only the weight helps if the stem is pointed upward. The other forces that must be overcome are:

1. Pressure force against the area of the lower stem.
2. Sliding friction of the gate moving across the seat. This large force that must be overcome during closure must also be overcome in the opposite direction for opening.
3. Sliding friction of seals due to the addition of pressure. For opening, the piston and upper stem seals must be added. The lower stem seal friction usually is greater for opening because shut-in pressure normally is higher than flowing pressure.
4. Sliding friction due to mechanical makeup of parts.
5. Spring, if any.

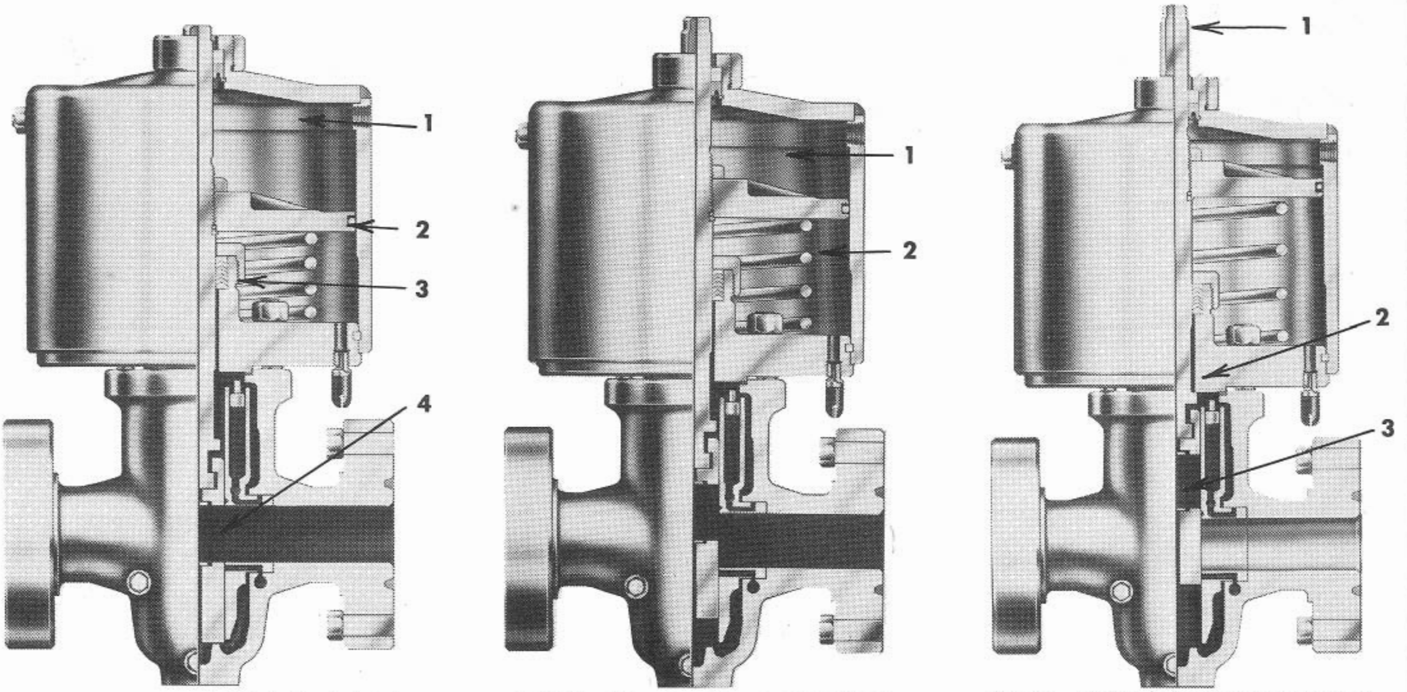

OPEN — Upper stem practically flush with cylinder, indicating valve is open. (1) Control Pressure on actuator piston holds valve open; (2) Large piston area permits use of low-pressure control system; (3) Stem packing section prevents contamination of actuator working parts; (4) Flowline pressure.

CLOSING — (1) Loss of control pressure on piston permits piston to move outward. Valve body pressure, acting on area of the lower stem, is designed to move the gate to the closed position; (2) Spring helps to close valve, specially where low flowline pressure exists.

CLOSED — (1) Stem extended indicated valve is closed; (2) Metal-to-metal seal between actuator bonnet and lower stem has served as a secondary seal when high temperatures have melted or distorted lower stem packing; (3) Upstream valve body pressure holds gate closed until trouble is corrected.

Fig. 8.10 *Pneumatic powered ratio piston surface safety valve*

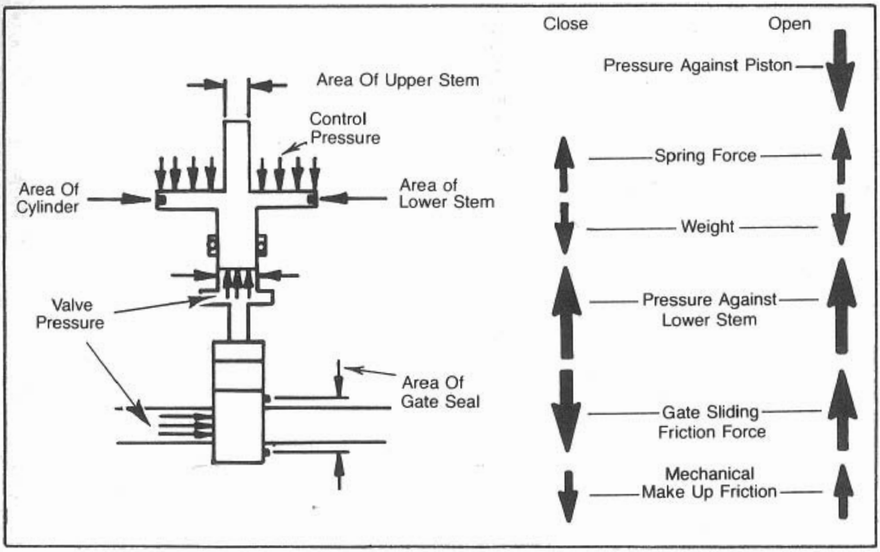

Fig. 8.11 *Forces of ratio piston surface safety valve*

Size of the lower stem is determined by the sealing diameter of the seat. Lower stem diameter is about the same for different valves of the same size because the sealing diameters are nearly the same.

Valve manufacturers have much the same design problems. The valve conduit bore is standardized in the industry by specification or by customer needs. The valve manufacturer wishes to keep the sealing diameter to a minimum to reduce operating effort and to minimize the size of the parts. Larger sealing diameter means larger gates and longer stroke. These in turn mean larger body and stem. Larger size means larger cost and therefore is less competitive. This standardization in valves makes size standardization of lower stems possible.

Lower stem size and valve working pressure determine the amount of force required to open the valve. The force to open is roughly twice the closing force. During opening, gate drag is in the direction opposite to that during closing. Opening force must be more than closing force plus gate drag. Opening force is supplied by control pressure operating against the piston area. Piston size needed is determined by the control pressure, or vice versa. Control pressure required for a given design is the maximum required at the maximum working pressure.

At any actual valve body pressure less than maximum rated pressure, the required control pressure is proportionally less. To simplify the calculations for determining the control pressure, the piston-to-stem ratio is used.

$$\text{Ratio} = \frac{\text{Area of piston} - \text{area of upper stem}}{\text{Area of lower–stem}}$$

The control pressure to hold open the SSV is calculated as:

$$\text{Piston pressure (to hold open)} = \frac{\text{Valve body pressure}}{\text{Ratio}}$$

Piston pressure required to open the valve with the downstream pressure at zero psi (full differential) is twice as much as is required just to hold the valve open:

$$\text{Piston pressure (to open)} = \frac{\text{Valve body pressure x 2}}{\text{Ratio}}$$

Some additional pressure may be needed to offset the effect of the spring force, but this usually is small, especially with a large ratio SSV.

Ratio piston actuators are commonly referred to by the type of control medium used. In the common sizes and pressure ranges of valves, ratios of less than 6:1 are usually considered "hydraulic" actuators and normally are powered by a hydraulic control manifold.

Actuators with ratios greater than 6:1, usually 10:1 to 150:1, are called "pneumatic" actuators. Control pressures usually range from 30 to 250 psi. Produced gas, compressed air, or (in some difficult situations) bottled nitrogen are the usual media for pneumatic systems.

The ratio to which an actuator is designed is dependent on many factors. Within the two general classes of hydraulic and pneumatic, there are reasons for choosing a given ratio. One is standardization. The manufacturer would like to use the same castings and other special raw materials as broadly in his product line as he can in order to reduce inventory.

Pressure rating is another reason. Generally, larger valves are used on lower pressures. A large low pressure valve may use the same size piston as a smaller higher pressure valve. Some components have practical size limits.

Although it might be desirable to have a low control pressure from the standpoint of piloting and availability, the size of the piston may be excessive. For example, for a 4 1/16-in., 10,000-psi working pressure valve to operate on 30 psi control pressure, a 72-in. diameter piston would be required. It is very expensive to build an actuator of this diameter. It is more practical to increase the power gas supply, add a low pressure pilot supply, and add the appropriate relay valving.

On the other hand, a 4-in., 5,000-psi valve probably would have the same cylinder and piston as the 2,000-psi version. Sometimes the physical space availability may require the actuator diameter to be limited. This is most prevalent in the block valve and block tree applications.

Springs for pneumatic actuators normally are below the piston. They normally push directly on the piston. Hydraulic actuator pistons usually are above the main cylinder because of diameters involved. When the free length of a spring exceeds about three times the diameter of the spring, it must be guided to prevent excessive buckling. Small diameter springs of the same strength (pounds force) and rate (pounds per inch of deflection) must have more coils and solid length than a larger diameter spring.

These characteristics of springs dictate to some extent the size and shape of actuators, especially hydraulic actuators.

Gate valves normally are designed as handwheel operated valves. Handwheel valves normally have the maximum thrust applied in the short distance near the end of the closing end of the stroke. The person operating the valve feels this resistance and applies to the stem only the amount of torque that is needed. He also feels the stop and so quits turning when the valve becomes fully open or fully closed.

Some valves require turning the wheel back about a quarter turn to prevent jamming the gate so that it can float to attain its seal. Others have the gate shoulder on the body in the down-open position to establish drift (hole in gate aligned with hole in body). Actuators must be capable of exerting an excessive force for reliability of closure.

It is very important for a safety valve to close. Much less important is that it reopen. These large forces can be detrimental to the stem-to-gate connection, gate, and/or body if not limited. Because of this, special care must be exercised in the design and assembly, and it usually is best to limit the stroke in the actuator. The down-open limit should be adjustable for drifting. Adjustment for valves that are designed to have the downstop accomplished by the gate shoulder on the valve body should have a simultaneous stop in the actuator to prevent overloading the gate.

The upstop is best accomplished by engaging a shoulder on the lower stem with a shoulder on the bonnet. The shoulder can absorb the impact energy should the cylinder explode or be ruptured by heavy equipment dropping on it during a disaster. The shoulder also serves as a metal-to-metal "fire seal" and reduces the hazard of feeding a fire if the packing fails in a conflagration.

The normal interface between actuators and valves in an SSV is the bonnet and stem. These parts are different for every size, make, model, and pressure rating of a valve. The standard bonnet and stem usually do not lend themselves to attachment of a fail-safe actuator.

In any case, a special bonnet must be built. It becomes advantageous to use this part, in most cases, as the piece to which the cylinder is attached, even with large diameter cylinders.

For most single valves, through 6-in. size, extending the bonnet flange radially outward for the cylinder attachment makes the SSV very compact and rugged. The design also provides protection from fire for the stem packing and bonnet bolting.

In a fire this feature is significant in the survivability of the line pressure-holding capability of the valve. The compactness makes the safety valve less vulnerable to damage in handling and during catastrophes.

The stem is connected to the gate so that the gate can float in order to let the gate and seat seal properly. The stem-to-gate connection may be a "T" head type connection, a loose Acme thread, or both. Rising stem valves tend toward a "T" head type. Non-rising valves tend toward a threaded nut arrangement.

Although the stem to gate connection must be loose in the direction of the conduit, it must be rigid in the direction of movement in order to assure that the movement is positive. Since the stem extends out the top of the cylinder, there is a positive indication of the condition of the valve (Fig. 8.13). If the stem protrudes only slightly (¼ in.) the valve is in the open position. If it extends stroke distance more, the valve is fully closed. A threaded connection on top of the cylinder makes it possible to use several devices for control and feedback:

1. *Lock cap*—heat sensitive, fusible, or non-heat-sensitive (solid metal).
2. *Opening jack*—hydraulic, mechanical-hydraulic, or mechanical.
3. *Position indicator*—electric or pneumatic.
4. *Stem protector.*

Within some limits, combinations of these devices can be used. In some cases, design or strength may limit usage.

Some actuators with built-in mechanical opening jacks do not provide an externally visible indication as to whether the valve is out of service and cannot close. Special care should be exercised in the use of these actuators. Indeed, they are not permitted as wellhead surface safety valves by API Spec. 14-D because of the danger of leaving the lease unprotected.

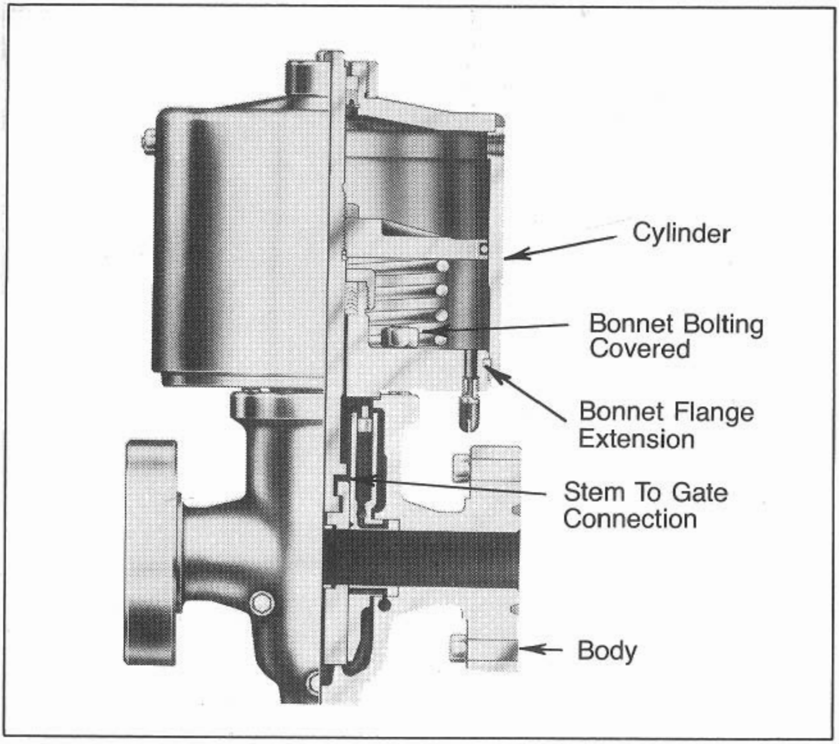

Fig. 8.12 *Compact actuator design*

It is convenient that in normal operation (valve open) the stem is retracted into the cylinder and protected from corrosion and physical damage. Even the sealing portion of the cylinder bore is protected from the most corrosive environment—salty air.

Types of actuators and applications.

By far the most common gate valve actuator for SSV's is the large ratio reverse acting ratio piston type. For a single valve with plenty of room, compact design which has the cylinder attached to the radial extension of the valve bonnet is most appropriate.

Ruggedness and simplicity are the primary advantages of this type of design. Due to simplicity and compactness, it is a little less expensive to manufacture than are the extended bonnet versions. Extended bonnet valves are required on multiple completion block valves so that the large

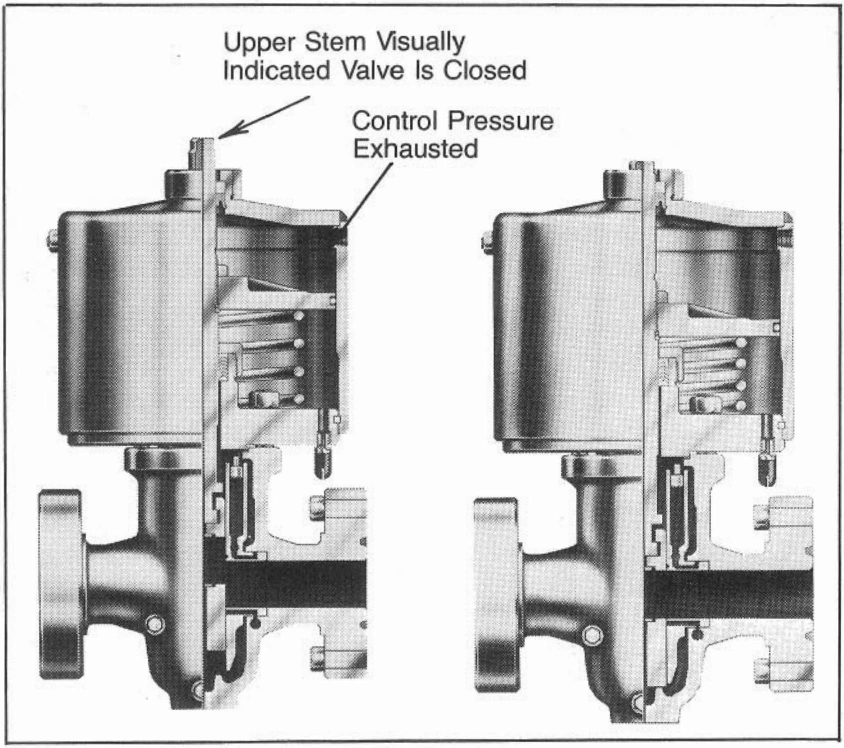

Fig. 8.13 *Stem provides positive external indication*

diameter cylinder will not interfere with the large end flanges of the block valve. Extended bonnet designs are needed sometimes on single valves that do not have flanged bonnets or on valves that have loose flanges on the bonnets.

Provision must be made for installing the bonnet to body retaining nut, or flange, past the large diameter cylinder attachment flange. This means that cylinder flange must be removable. Usually, therefore, it is attached with a locked thread. The specific design will vary according to the limitations of the valve design, but standard parts of actuators are used as much as possible.

Although extended bonnet designs are not as rugged as are compact designs, ruggedness should be preserved as much as possible. Wherever practical a single piece double flange design should be used to maximize structural strength. Valves are designed for handwheel actuation, so very little consideration is given to how strong the bonnet is in bending.

In an effort to have the most compact handwheel valve, it is

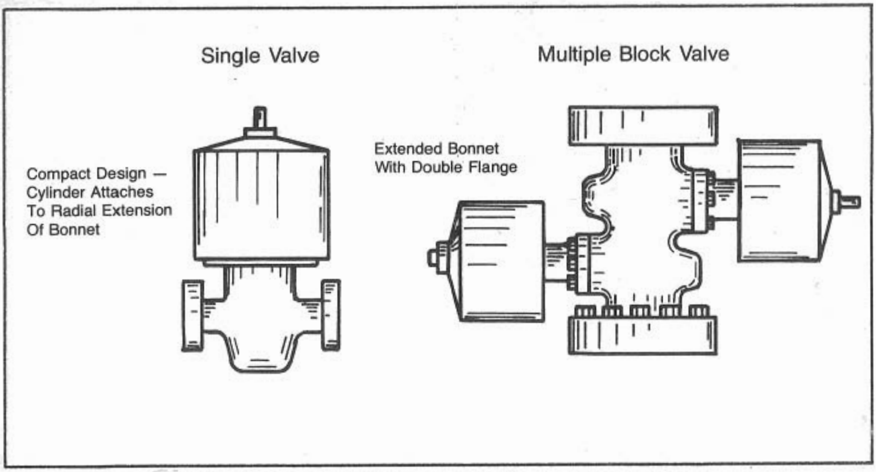

Fig. 8.14 *Pneumatic actuators for reversed gate valve*

sometimes designed so that the gate moves up into a cavity in the bottom of the bonnet. There is also a larger diameter stem in the reverse gate actuator than in a handwheel valve. The outside diameter of the bonnet neck is limited by bonnet bolting wrench clearance. In some designs these restraints limit the strength that can be attained in the area of the bonnet immediately above the bonnet flange.

In any production valve design, the bonnet should not have a joint, mechanical or welded, between the stem packing and the bonnet-to-body seal. This criterion insures structural and pressure integrity.

Extended bonnet designs (Fig. 8.16) are used on composite (block) trees, too. Even single trees require an extended bonnet actuator because of the closeness of bonnets from one valve to the other on the tree. Most composite tree bonnets have only about 0.12 in. nominal clearance. This is the normal practical minimum. Such closeness prohibits the use of the compact design since there is no room outside the bonnet for the cylinder, and since bonnet nuts prohibit using a smaller diameter cylinder. This forces the use of an extended bonnet with the bottom of the cylinder flange far enough from the bonnet flange for wrench clearance with the nuts just started on the studs.

Another consideration in the design is clearance for the bonnet neck of adjacent handwheel valves. If the outside diameter of the cylinder is too great it may interfere with the stem of the adjacent valve. Cylinder outside diameters are limited in such situations, as are bonnet extension lengths. If the cylinder is too large, it will interfere with the hand operation of the adjacent valve.

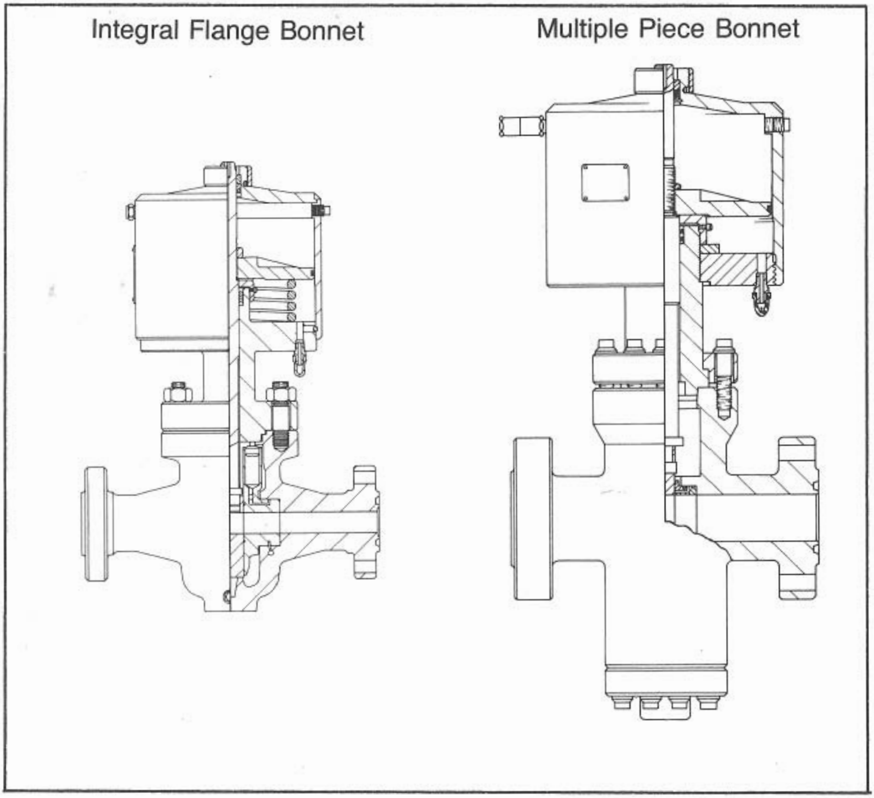

Fig. 8.15 *Extended bonnet designs*

Two logical ways to overcome the clearance problem are to use a stem extension for the handwheel or to operate the valve with a wrench (Fig. 8.16). The stem extension method is the simplest and most obvious to use. Special bracing must be installed to support the extension near the wheel. The wrench method is not as easy to operate quickly, but a ratchet can help.

Some manufacturers can provide special configurations of trees with one or more bonnets on the "back" side to make adaptation of the actuator easier. At least one type has a bolted on "bottom" of the body. The tree body is symmetrical so the actuator can be installed in either direction. Another manufacturer will supply composite trees with extended spacing between valves.

It is obvious that special care must be taken in adapting to any but a single valve. When ordering the equipment, the total installation must be considered.

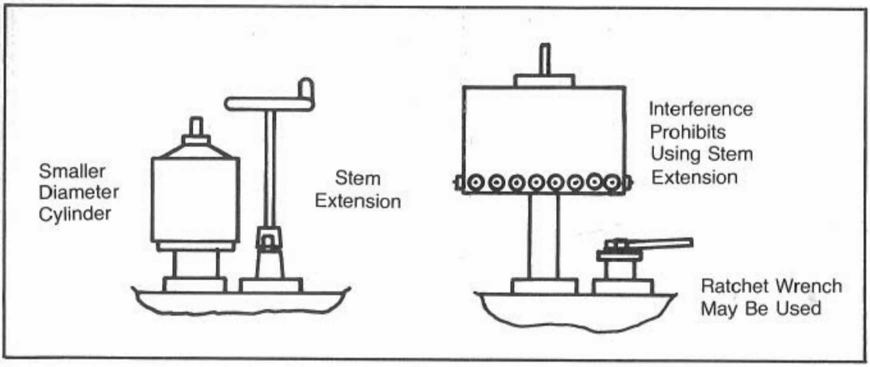

Fig. 8.16 *Interference problems on composite trees*

All new or newly completed wells offshore on the U.S. Outer Continental Shelf must have surface controlled subsurface safety valves. These hydraulically controlled valves require a hydraulic control unit, so it follows that compact trees that make pneumatic actuators difficult to use are prime candidates for hydraulic actuators.

Hydraulic actuators have pistons that are only about twice the diameter of the lower stem. This usually means the cylinder's outside diameter is less than the bonnet flange diameter, so there is no diameter clearance problem. Also, since there is a hydraulic control system needed for the subsurface valve, hydraulic actuators may be used.

The primary space problem associated with hydraulic actuators is stem length. Most pneumatic actuators are large enough in diameter that the closing spring can be placed below the piston so that it does not add much to the actuator size. Large diameter springs can be made short because the deflection per coil is proportionately large. When diameter is reduced, the number of coils must be increased to get the same total deflection. This adds to the length of the actuator.

Almost all hydraulic actuators must be "extended bonnet" because of the diameters. This increases length. The most convenient location for the spring is on top of the cylinder in a special spring housing. The spring housing must be long enough to contain the solid height of the spring plus valve stroke. The combination of all these lengths can seem quite long, especially on a small composite tree.

Most of the objection to the length is due to the weakness of having the small diameter protruding so far. The strength may not be much less than that of a pneumatic actuator, but it looks weaker and may be weaker because impacts operate against a longer lever arm. Another problem is interference with adjacent trees on very compact platforms.

One compromise design has the spring pushing on the bottom of the

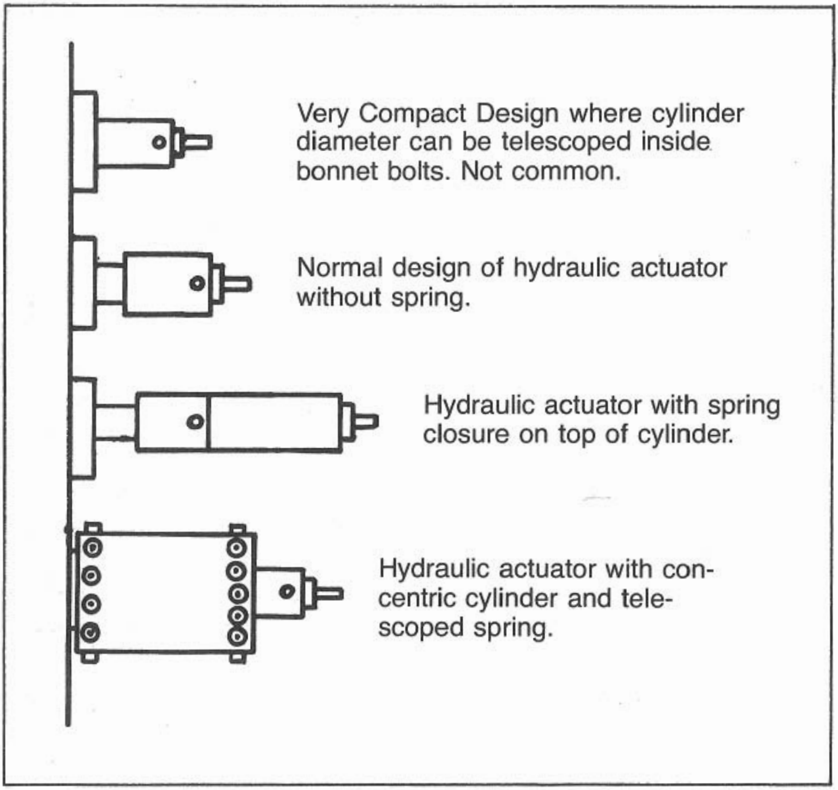

Fig. 8.17 *Size comparisons of various types of hydraulic actuators*

piston through a telescoping member by a concentric spring outside the hydraulic cylinder. That cylinder is supported by an outer concentric cylinder (Fig. 8.18). The design is more expensive and is limited as to how low the ratio can be, but it is shorter and not much larger than the bonnet. This design has been used in the Arctic environment and on a North Sea platform.

The optimum ratio for a hydraulic actuator depends upon maximum hydraulic system pressure available, maximum shut-in tubing pressure, and closure time requirements. Many hydraulic systems are limited to 3,000 or 6,000 psi because the system components for higher pressures are not readily available. These pressures sometimes limit the ratio of the actuator. For example, if the well pressure is 6,000 psi and hydraulic pressure is 3,000 psi, the ratio of the actuator must be more than 4:1.

On the other hand, if hydraulic pressure could be 7000 psi and a 2:1

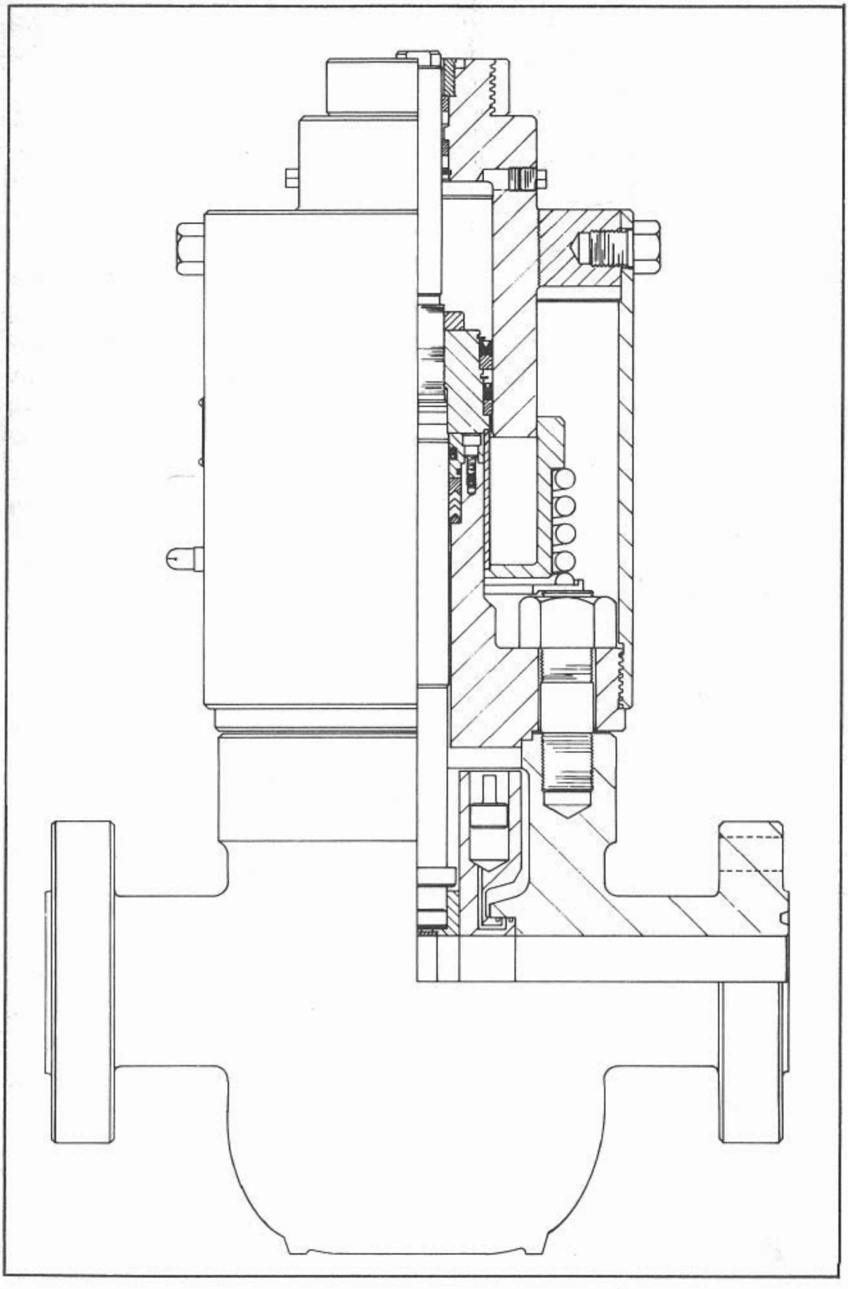

Fig. 8.18 *Concentric cylinder actuator*

ratio actuator could be used, the valve would close 2.8 times as fast because of the reduced volume and higher pressure developed by the piston due to closing forces.

This is the type of situation encountered by downhole valves which need more hydraulic pressure (1,000 psi) than shut-in tubing pressure, and by process train and pipeline valves where pressures are generally less than tubing pressure. In these situations the pressure requirements can be used to inherently improve installation.

All of the catastrophe shut-in system can be connected to the same hydraulic pressure source. Since the hydraulic pressures are so much higher than pipeline pressure, the actuator can have a ratio slightly less than 1:1 (usually 0.9:1). Under these conditions the lower stem area can be both the closing piston and the opening piston. The number of polished surfaces is reduced from three to two since the "cylinder" is not a sealing surface. This is a cost savings (Fig. 8.19).

One of the more hazardous times during the production of a well is while wireline operations are being conducted. If conditions on the surface require quick closure of the well while the wireline is in the hole, then the wire must be cut. It probably would be cut by the safety valve, if the safety valve could cut it.

About 2,000 lb net force is required for a valve to cut a 0.092-in. diameter measuring line plowsteel wire if the gate has a sharp corner and very little clearance between it and the seat. The force can be obtained by pressure, spring, or both.

Spring forces this large are hard to come by. A larger, oversized, lower stem can provide the force (Fig. 8.20). This approach is reasonable since the valve will be almost closed when the force is needed. A minimum operating pressure must be decided on and the lower stem must be designed accordingly.

For example, a 3-in. valve and 2,000-psi minimum valve body pressure would require a 4.5 in. lower stem diameter. Another combination could be 70 psi and 7-in. diameter. The normal lower stem is 2 in. in diameter. Such a design is needed only in the run of the tree where the concern for danger during wireline operation is unusually great.

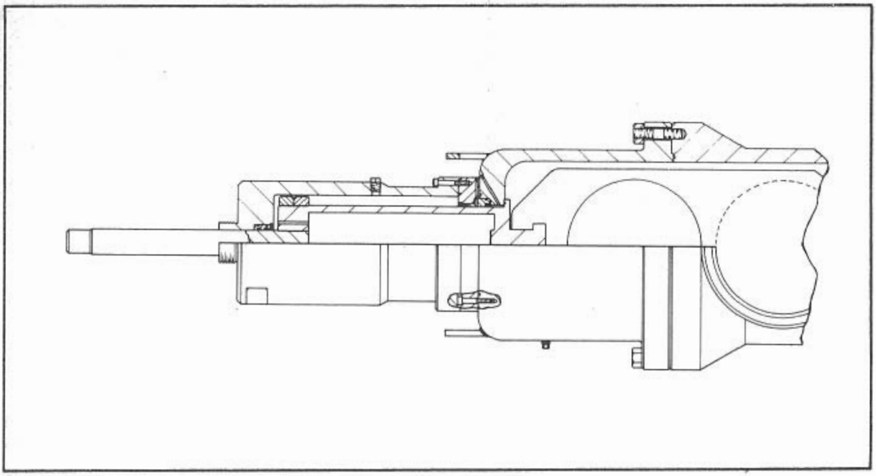

Fig. 8.19 *Actuator with 0.9:1 ratio*

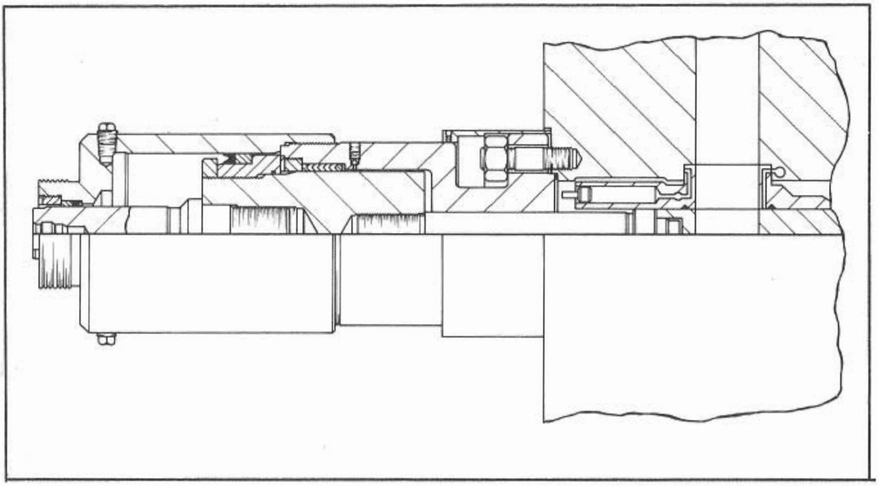

Fig. 8.20 *Hydraulic actuator for composite tree has oversized lower stem for cutting 0.092-inch wireline with low wellhead pressure*

9

Auxiliary Equipment

A surface safety valve is controlled only by information from the pilot system. No feedback information goes to the pilot but feedback is important for a computerized supervisory system. Besides piloting, other information feedback, control, and supplemental functions are performed by auxiliary equipment that is used on the actuator. These devices may be supplied as a part of the SSV or may be added later. Most use the relationship of the stem to the cylinder thread.

Lock cap

While the pilot control system is being worked on, it usually is necessary to bleed the pressure from the actuator. This allows the valve to shut, resulting in lost production. The lost production may adversely affect the balance of flowing conditions in the process train and therefore cause other equipment to shut in.

During wireline operations it is desirable to mechanically lock the valve in the open position to insure against accidentally cutting the wire and damaging the valve or wireline equipment.

A lock cap can be screwed onto the top thread of the reverse acting actuator cylinder with the valve in the down-open position. The valve thereby is prevented from moving to the closed position.

If there is concern that a fire might occur while the safety valve is locked out of service (and therefore incapable of closing automatically), a fusible (heat sensitive) lock cap can be used. Fusible lock caps are made with a latch mechanism that is retained with a component of low temperature melting metal. The metals used for this service are alloys of bismuth, lead, tin, cadmium, and/or indium. The alloys chosen have definite melting points (eutectics) that range from 117 °F. to 281 °F.

A problem with fusible metals is low mechanical strength. Therefore, careful design is required to prevent overloading the weak material under high load conditions and operating under very low load conditions when there is no pressure in the valve body.

Opening jacks (Fig. 9.1) can be used as lock open devices. The hydraulic hose between the pump and hydraulic opening jack can be used as a fusible link, although the thermal properties are not as definite as with the fusible metals. Definite melting properties would be more important if the characteristics of fires were more definite.

Opening jacks

If the control pressure source is downstream of a surface safety valve, there may be a need for a device that uses manpower to open the

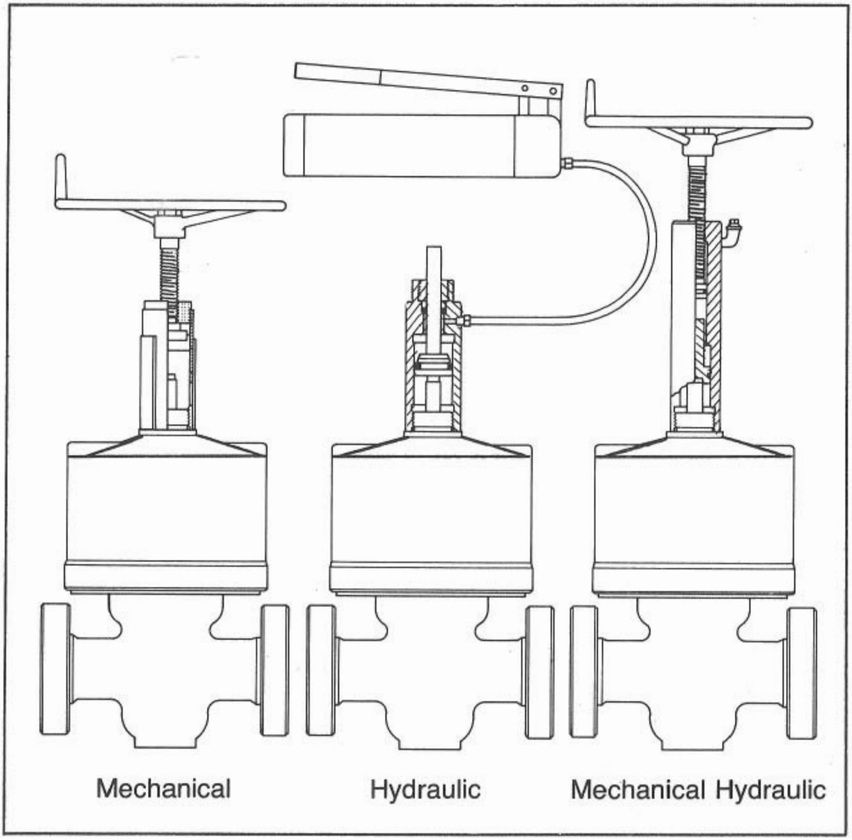

Fig. 9.1 *Opening jack assemblies*

valve. In some cases an alternate control pressure source can be used. Such a source might be a hand pump in the hydraulic control manifold if the valve is hydraulically powered.

If supplying pressure to the actuator piston is not practical, then a jack assembly that will push the stem down to the open position may be used. There are three general types of jacks available.

Mechanical—A handwheel operated screw jack is the simplest and most direct type. The most serious limitation to screw jacks is the amount of thrust that can be developed and/or sustained. The thrust that can be sustained is that which is limited by the parts, especially the bearings. The limits to thrust that can be developed are the strength of the person, diameter of the handwheel, and efficiency of the screw thread.

Published ratings of equipment need to be read with the understanding of those limitations, for the greatest variable is the output of the person. The mechanical jack is very stable. It won't let the valve creep closed due to leakage, so it also can serve the lock open function of a lock cap.

The mechanical jack is easy to install and remove for temporary use in various locations. Care must be taken to keep the bearings lubricated and protected from corrosion. Lubrication of the thread will insure easier operation, too.

Mechanical/hydraulic—To reduce the required handwheel torque by half and still have some of the simplicity and size of the mechanical jack, a 2:1 piston can be added below the screw thread powered piston. Besides the 2:1 force advantage that the piston gives during the first part of the opening stroke, the hydraulic fluid serves as a low friction thrust bearing.

The stroke of the stem and small piston and the stroke of the large piston, are designed so that toward the "open" end of the stroke the stem may bear directly upon the floating piston to give metal-to-metal contact. This is protection against gross leakage of the trapped hydraulic fluid which would let a safety valve close on a wireline or other equipment.

Hydraulic—The hydraulic jack is simply a hydraulic cylinder and piston that is powered by an external hydraulic pump. The pump is usually a hand pump that is connected with a flexible hose. By far the most outstanding advantage of the hydraulic jack is the ability to open large and high pressure valves manually. To offset the problems of holding the valve positively open for wireline work, a mechanical lock cap can be attached to the top of the jack. Drifting closed may not be a serious problem during wireline and system maintenance work since personnel must be in the immediate area while the safety system is locked out of service.

Under these conditions the hydraulic jack serves as a heat sensitive lock open device. The heat should cause the hose to fail and release pressure, which should let the safety valve close.

Position indicators

Modern, complex platforms have tended toward centralized control and remote telemetering. Control implies monitoring to verify that commands sent to the equipment are accomplished. Monitoring a safety valve can be done by:

Sensing cylinder pressure—A simple pressure switch or gage will indicate if the signal pressure is applied to the piston. If the indicator has two levels of indication (adequate pressure to open or zero pressure), signal pressure is reasonably reliable information that the command has been received by the valve.

A single level of pressure does not eliminate the possibility of the pressure being so low that the valve might partially close. In either case it only tells that a command has reached the valve, not that the valve has obeyed the command.

Sensing flow rate or pressure—This is the easiest method to use in a remote supervisory control system because these are some of the parameters being monitored to decide whether or not to close the valve. Care must be exercised to determine how discriminate these measurements are in the extreme limits.

If a valve does not fully close, the sealing mechanism of the valve can be ruined. The metal surfaces can erode, hunks of plastic can be torn from seal rings, or sealant can flow out. If the valve is not completely closed the leak rate may be insignificantly small until significant damage has been done. If a valve does not open fully, erosion damage to seats will occur and there may be difficulty in getting wireline tools through. Flow and pressure measurements will not detect that the valve is not fully open unless the restriction is significant.

Sensing upper stem or piston position—Unless the stem-to-gate connection has been broken, the full-up and full-down positions of the valve can be accurately sensed with a device. The device may be mounted on the top thread of the cylinder to sense the stem position or on the bottom of the cylinder to sense piston position.

Indicators mounted on the top of the cylinder that sense piston position can be used, too, but the sensor must sense through a pressure seal. The type of indicator that senses the bottom of the piston works fine on pneumatic actuators and single valves if there is not interference between the spring and the sensing plunger.

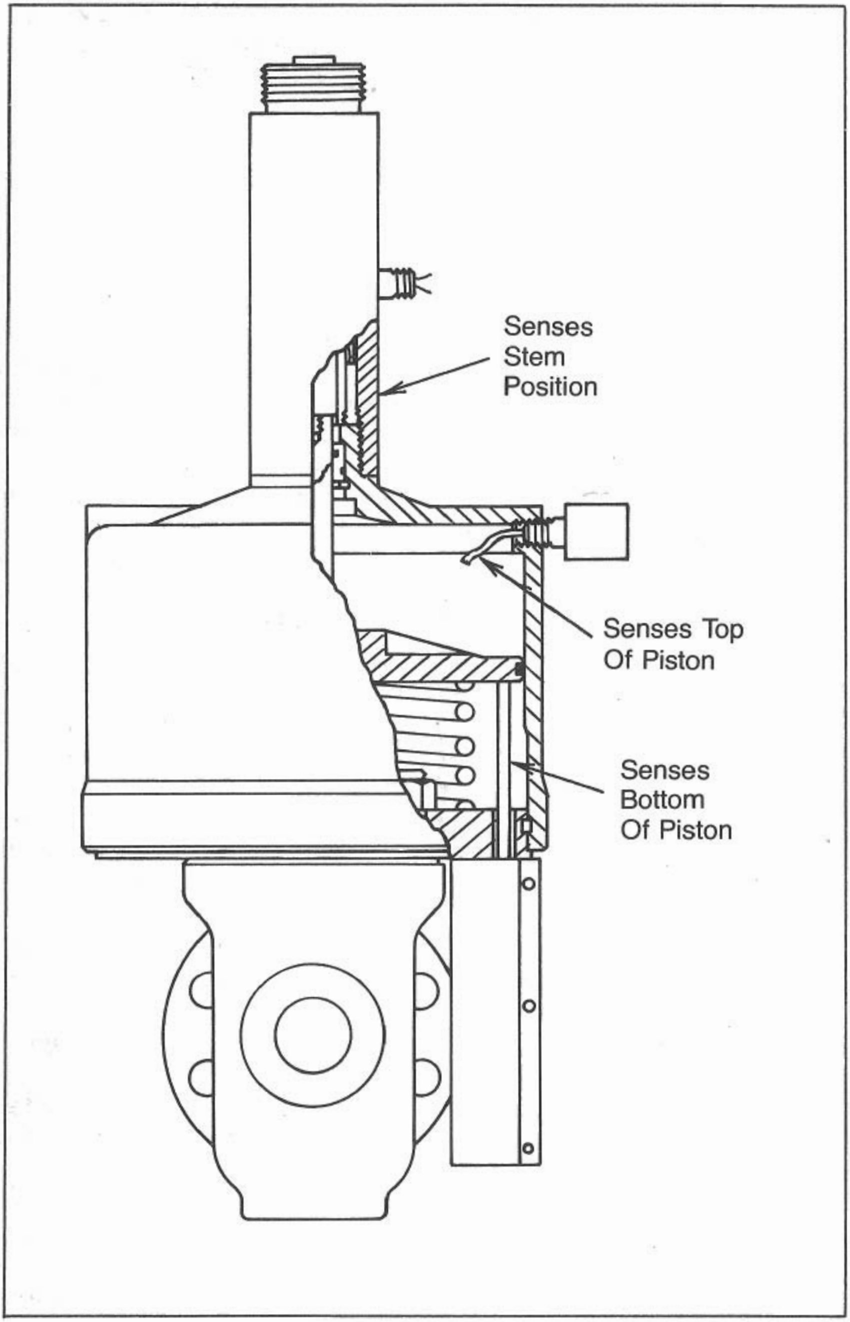

Fig. 9.2 *Locations of position indicators*

On single valves the device is nicely protected by the cylinder and end flanges, but on block valves and block trees the shape of the valve body may force the use of another type. The most universally available location for the position indicator is on the top thread. The indicator can be built for use with opening jacks and lock caps. Less costly, but less rugged, versions may sacrifice this feature.

There are two ways to transmit information: electrically and pneumatically. The choice depends upon the rest of the system.

1. *Electric—*

Explosion proofing and weather proofing are the worst problems in an electrical system. The National Electrical Code requirements make combined "proofing" difficult. Magnetically operated reed switches in an "explosion proof" housing constitute one way to accomplish this goal. The contact surfaces are hermetically sealed for long life in the corrosive environment (Fig. 9.3).

Mechanically operated switches can be made to carry a greater electrical load, but the mechanism must pass through a moving or flexing seal. Either type has more limited life in the offshore environment. Electrical load capacity problems can be virtually eliminated by proper circuit design.

It is generally best to keep the complex and high powered electrical components and circuits back in the dry, unclassified control room. Components in hazardous areas must either be explosion proof or otherwise intrinsically safe. The rules for explosion proofing provide that the container of the circuitry must be able to structurally withstand the force of an internal explosion and have the hot gases cooled below ignition temperature as they leak out. Such equipment is inherently rugged, but is expensive and restrictive in design flexibility.

Wiring is encased in conduits and containers that look and are very much like pressure plumbing.

"Intrinsically safe" means that at no place in the hazardous area is there enough electrical energy available to cause a spark with enough energy to start an explosion. Signal circuitry lends itself to this type of design, but even if a circuit is made intrinsically safe it still may need to be encased in explosion proof housing for protection from mechanical abuse.

The lower powered intrinsically safe design plus explosion-proofing do provide double protection for this very serious situation of electricity with hydrocarbon vapors. Low power lengthens switch life, too.

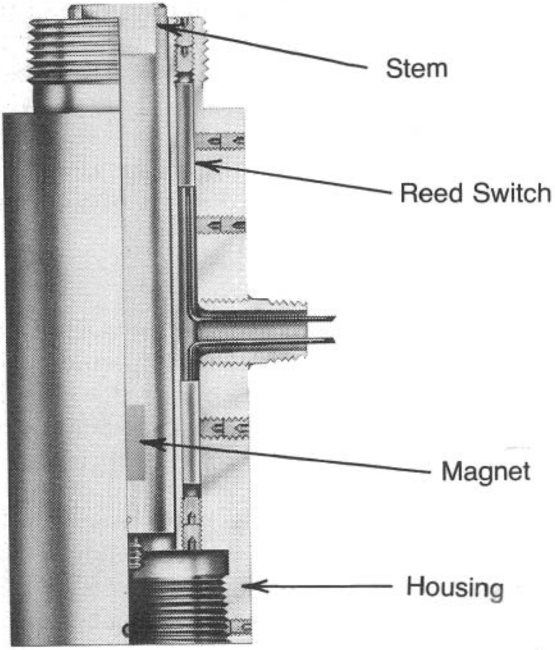

Fig. 9.3 *Electric position indicator*

2. *Pneumatic—*

The type of switching that is desired in a pneumatic indicator (Fig. 9.4) depends on what the circuitry will be at the receiving end of the signal line. Indicators can be full open bleed, full closed bleed, full open and full closed bleed, or the same in block and bleed.

Both full open and full closed indications are the only ways to eliminate ambiguity. One "switch" may indicate fully open (or closed), *not* fully open (or closed), or not working. Two switches may indicate four conditions: full open; not full open *nor* full closed (between); full closed; or maybe not working.

Two two-position switches reduce the ambiguity some by indicating full open; not full open, and not full closed; full closed; not full closed, and not full open; and indicator not working.

There is a very subtle difference in the "single throw" and "double throw" switch circuits. It has to do with the reliability of indication. It more positively assures that a burned out bulb isn't interpreted as a

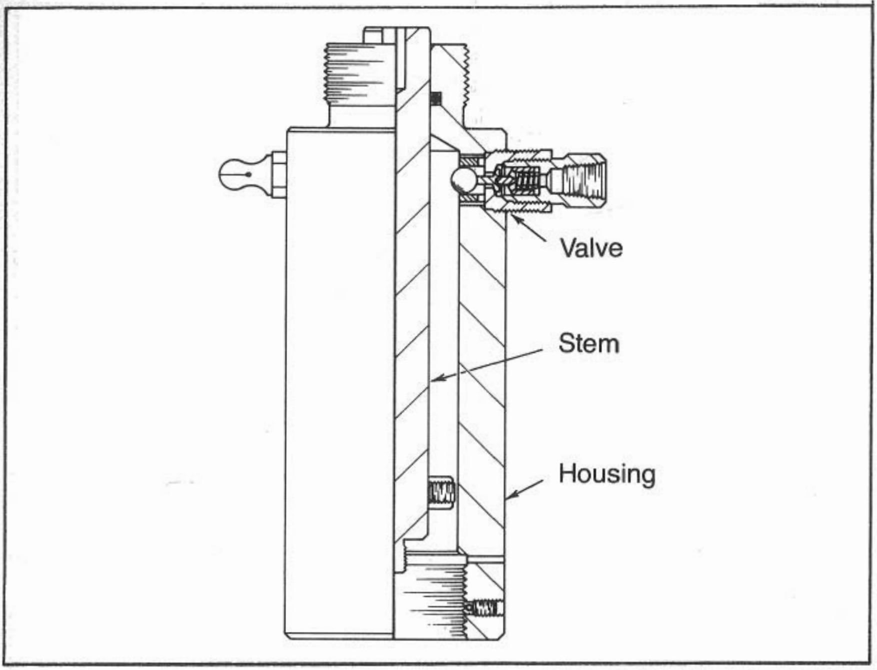

Fig. 9.4 *Pneumatic position indicator*

"not-in-that-position" indication. The cost of the added channels of communication needs to be considered compared to the confusion caused by lack of information or ambiguity.

Thread protector

Normally there is nothing attached to the top thread of the cylinder or indicator. A protector (Fig. 9.5) should be installed to prevent abuse when not being used.

Stem protector

While the safety valve is in service, the upper stem is in the cylinder and protected. However, if the well is periodically closed it may be prudent to protect the polished surface from being coated by drilling mud, or some other substance that may damage the upper stem packing when the valve is reopened.

Visibility of the stem position is usually worth the cost of making the stem protector (Fig. 9.6) transparent, or using a flexible boot.

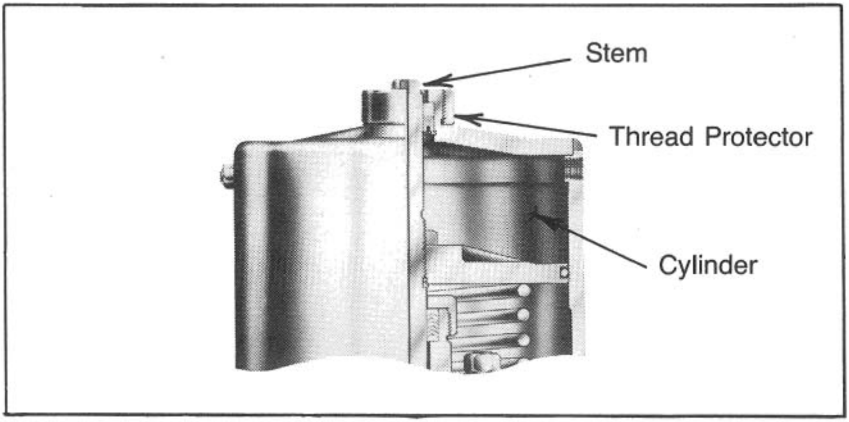

Fig. 9.5 *Thread protector*

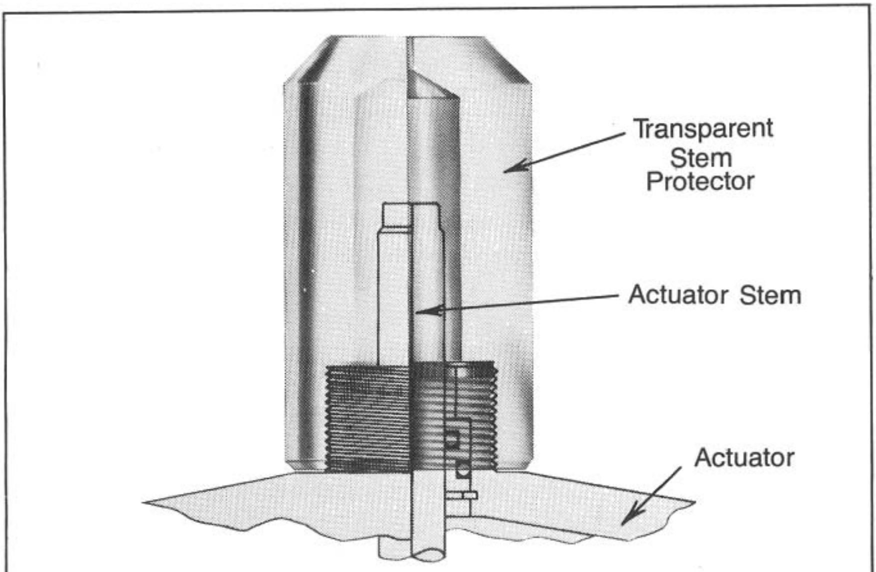

Fig. 9.6 *Stem protector*

10

Pilot Valves

Pilot valves receive information then actuate to command another piece of equipment to perform some function. In safety valve systems the three main types of pilot valves are:

Monitor pilots—These sensors (Fig. 10.1) control a signal to a relay valve that will control a larger amount of energy which controls the safety valve. Typically, the pneumatic systems operate between 30 psi and 150 psi. Some systems operate as low as 3 psi and some as high as 500 psi.

Normally, the amount of system fluid that must be controlled is limited to the volume in the control lines, so the amount of energy involved is low.

Electrical pilots generally should be limited to less than 10 watts resistive ac load. Special precautions should be taken to protect the switch contacts against inductive "spikes" or "kicks" in dc circuits, high in-rush in tungsten filament circuits, and other such circuits.

Actuator pilots—These generally are relay valves that sense signal-or-no-signal conditions from the monitor pilot circuit. They control a higher energy level.

The higher energy level may be the greater volume required to operate the safety valve, or it may be a higher pressure such as in a line pressure powered valve, hydraulic pressure powered valve, or simply a two pressure pneumatic system.

Actuator pilots (Fig. 10.2) may be used for logic functions in a more complex system. Such logic may be, "If monitor A *and* B sense, then actuate;" or, "if monitor A *or* B sense, then actuate." Actuator pilots also may be used to establish hierarchy of control such as that necessary to close only one well if a flow line fails, close only gas wells if the heater flame goes out, or close all wells if there is a fire.

Monitor/actuator pilots—These combination function pilots generally are used in direct controlled systems where they sense the flow line pressure and control it to cause the safety valve to actuate.

Monitor pilots

By far the most common parameters that are sensed are pressure, level, and fire or heat. The most common sensing pilots are for remote controlled pneumatic systems. They have a sensing element and a valving mechanism. Pressure and level sensors that are purely mechanical must take energy from the sensing mechanism to power the valve. The sensors are force balance systems where pressure against an area, or flotation of a body, is balanced against a spring force and/or weight.

Because of the limited forces available, the sensitivity of a purely mechanical system has a real and practical limit. Fortunately, that limit is normally within the range needed by oilfield production systems. The needs of some production systems stretch the state of the art of purely mechanical pilots. These cases should be recognized so that equipment that matches special needs can be used.

Mechanical/remote pressure sensing pilots.

The pressure sensing mechanisms generally are of two types: flexing member and moving seal. Moving seals have a lot of friction that varies from unit to unit, at different pressures, and with time. Any friction, even precisely constant, increases the deadband (pressure difference between actuation and reset) and thus limits how close the high and low pressure pilot settings can be. It also may restrict how closely the pilot can be set to the flowing conditions.

Since most sensing pilots are adjusted with the use of a reference pressure to a set point the variation from unit to unit is of little consequence. Likewise variation in friction with pressure is not an especially serious problem. But variation of friction with time seriously affects the repeatability of the pilot. This is the main limitation of pilot accuracy. The other main limit is the accuracy of the reference pressure.

Moving Seal—Moving seals are usually rubber. Some have been made of plastic, usually Teflon, but the memory and resilience are not generally good enough to compensate for reduced friction. The plastic is also more fragile. Rubber seals, even well lubricated ones, have a tendency to slowly relax into the minute valleys of surface roughness. Even polished surfaces will grab the rubber and cause a significant amount of break away friction ("stiction"). The Parker Seal Co. has published data that shows this increase to be as much as 300% over a period from 2½ seconds to 300 hours (Fig. 10.4).

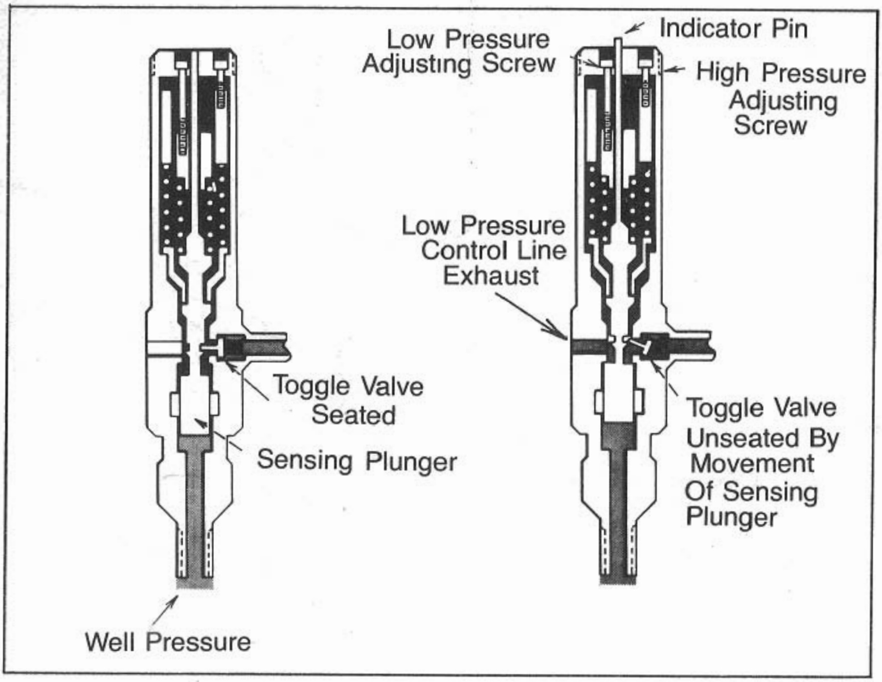

Fig. 10.1 *Monitor pilot*

Lubrication also will greatly affect the amount of friction. Pilots are assembled with a lubricant. After a short time in service on a dry gas line the lubricant will be leached out of the sealing area and there will be an increase in friction.

With all this friction, it would seem better to use something besides a moving seal. Unfortunately, this is not always practical. Moving seals can be made to withstand higher pressures and have longer strokes than other types of pressure sensors. The friction effect can be reduced by using a larger diameter piston or plunger. Since circumference increases with diameter, and area increases with the second power of the diameter, a percentage reduction in friction can be achieved.

Practical ranges of spring force and pilot size limit how much advantage can be had by increasing piston or plunger diameter. Flexing member sensors have a negligible amount of friction, but they have serious limits on pressure holding capability and stroke. The three main types of flexing member sensors are bourdon tube, bellows, and diaphragms (metal and elastomer).

Bourdon tube—Bourdon tubes (Fig. 10.5) are oval shaped tubes bent

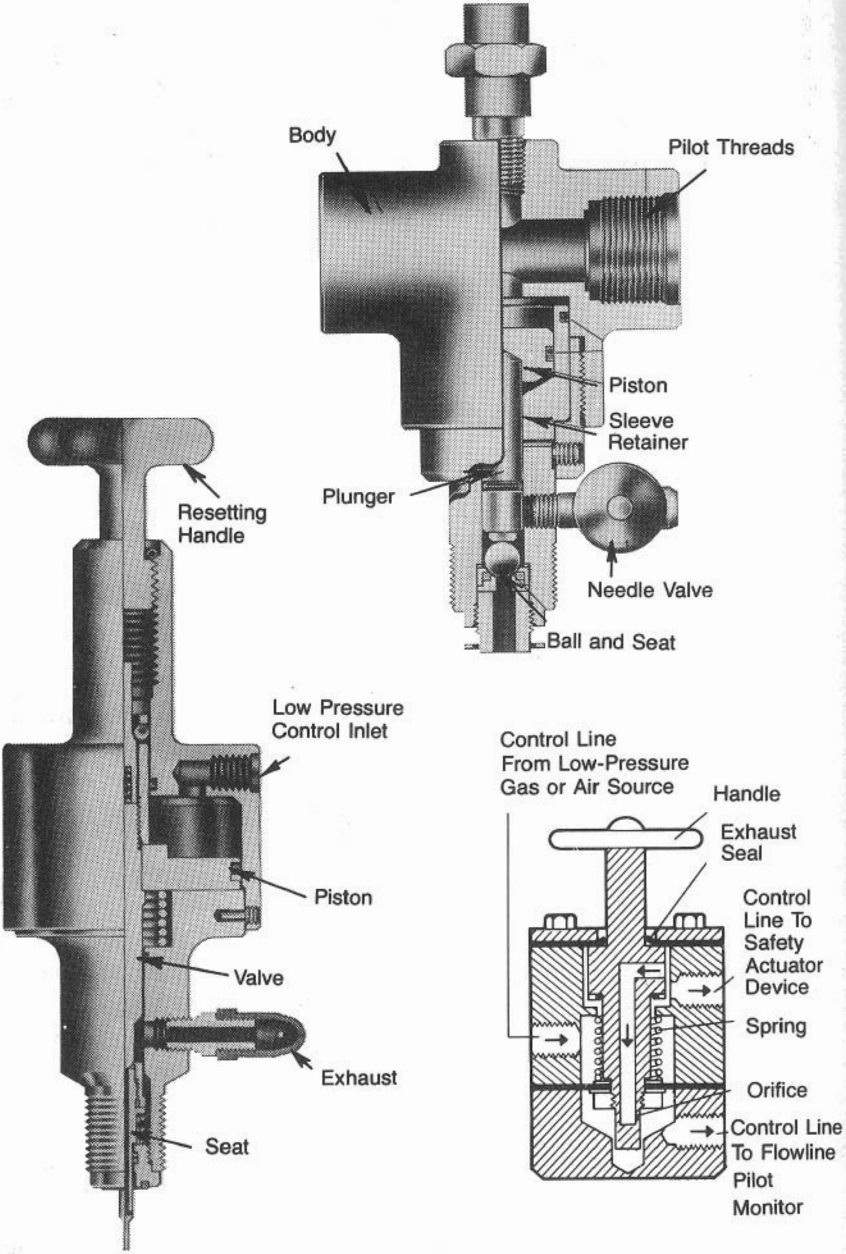

Fig. 10.2 *Actuator pilots*

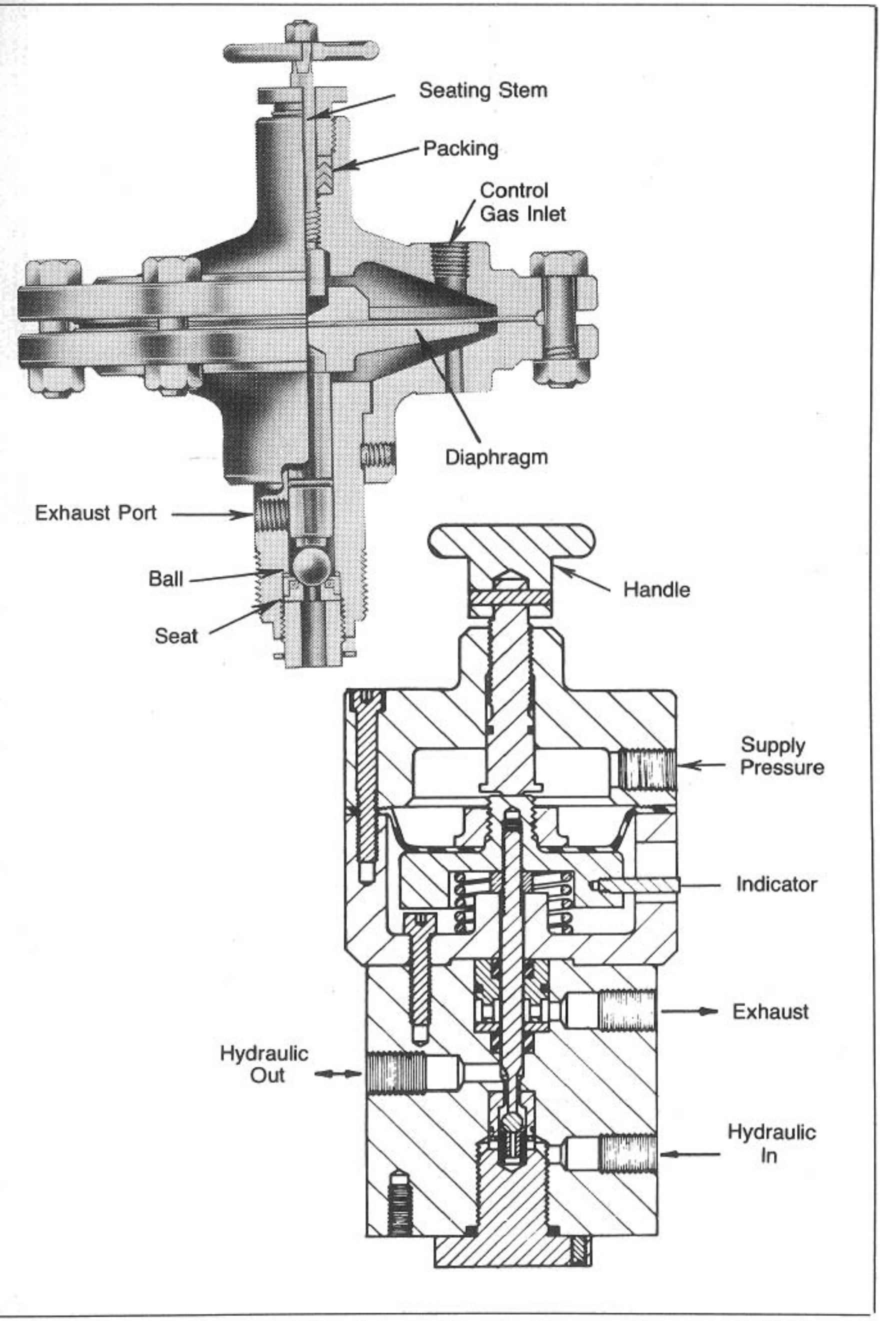
Seating Stem
Packing
Control Gas Inlet
Diaphragm
Exhaust Port
Ball
Seat
Handle
Supply Pressure
Indicator
Exhaust
Hydraulic Out
Hydraulic In

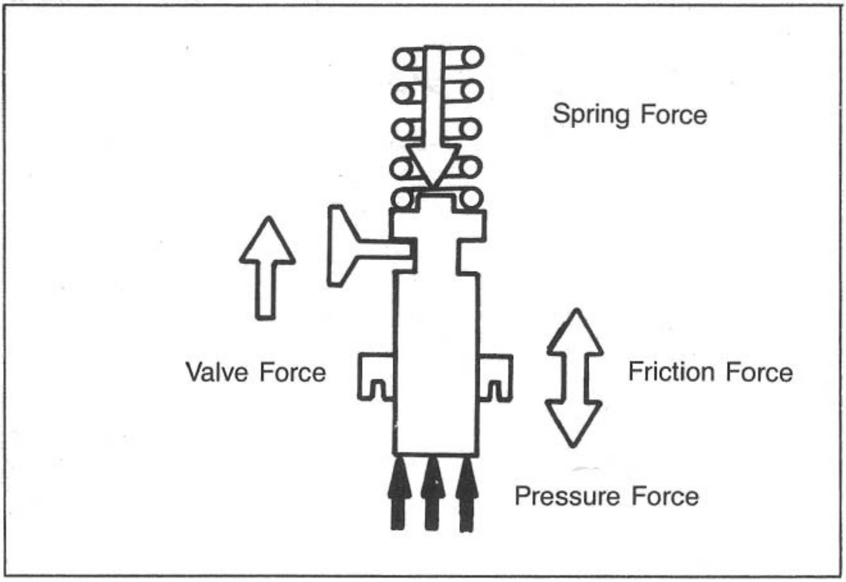

Fig. 10.3 *Forces in a mechanical pressure sensing pilot*

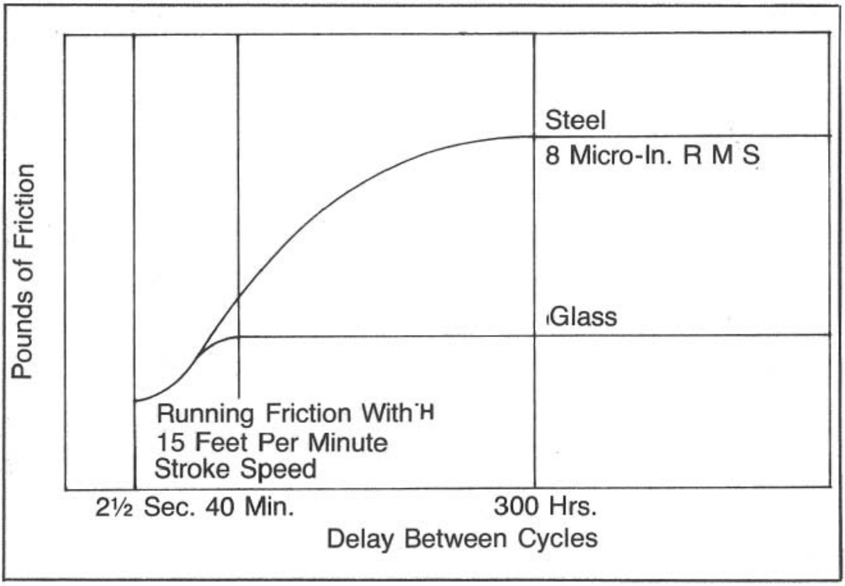

Fig. 10.4 *Change of packing friction from time at rest. Courtesy of PARKER SEALS*

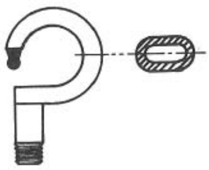

Fig. 10.5 *Bourdon tube*

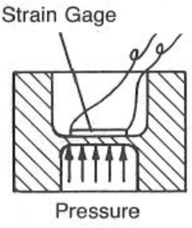

Fig. 10.6 *Diaphragm sensor*

into an arch or helix. They are the principle sensors used in pressure gages and can be made for very high pressures.

The tube tries to straighten when subjected to internal pressure. The amount of straightening is approximately 0.080 to 0.125 inches at the tip of the tube. This represents only about half a pound of force for a 4-½ in., 5,000-psi gage normal tube. The amount of energy that can be extracted from such a bourdon tube for practical size valving is very limited.

Diaphragm—In the practical ranges of oilfield pressures, most diaphragms (Fig. 10.6) are very stiff. The stroke is negligible for valving purposes. Most diaphragms are used with strain gages as pressure sensors.

Some of the most sensitive and stable pressure transducers use diaphragms. Electronic circuitry translates the elastic strain of the diaphragm to an electrical signal that is used to operate valving. For purely mechanical pilots, however, there is not enough deflection for use of a diaphragm to be practical.

Bellows—Below about 1,500 psi, hydraulically-formed bellows (Fig. 10.7) offer a good combination of low friction, high force, and deflection.

The main sensor friction is due to the guiding of the bellows to prevent buckling. Units can be made as direct replacements of plungers and pistons in some units. If a properly manufactured bellows is not overpressured, the leak proof life is long and trouble free.

Overpressuring is a much more serious problem with flexing member sensors than with plungers or pistons. A piston can be built with a travel limiting stop that will allow a pilot to withstand very high pressures and yet be sensitive in the lower pressure range. Elements of bellows lose some advantage under these conditions, but where the

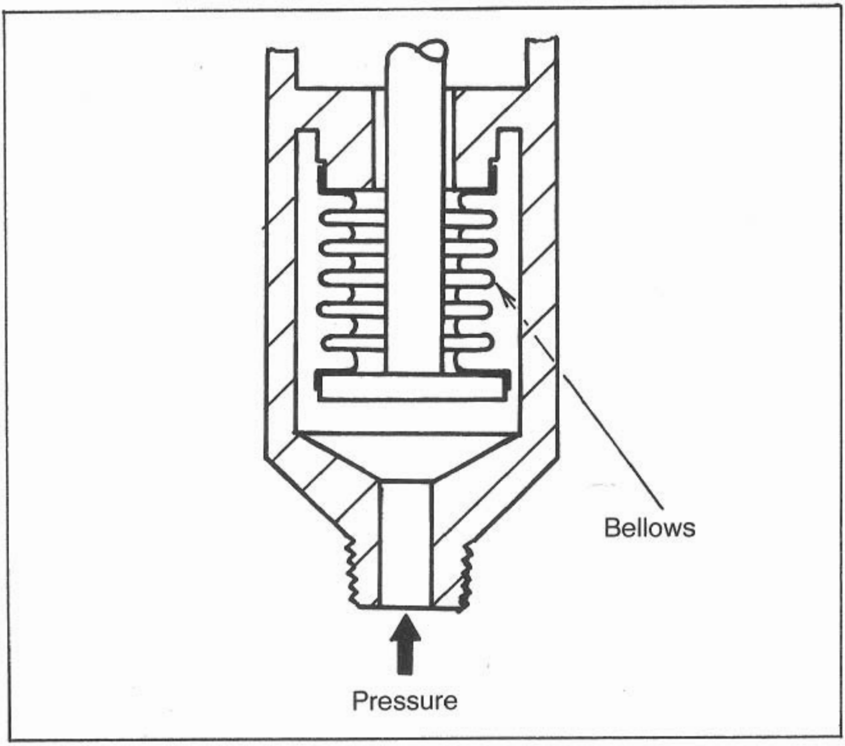

Fig. 10.7 *Bellows sensor*

maximum pressure of the system and the bellows is close to the setting, the low friction of the bellows makes it valuable.

PILOT VALVING

Valves for pilots are normally two-way for bleed systems, and three-way for block and bleed systems. Keeping in mind that the energy required to operate the pilot valve is taken from the sensor, it is highly advantageous to reduce the valving energy to a minimum. The two most common types of valves used in pilots are poppet valves and spool valves (Fig. 10.8).

The energy required for each is:

Energy for poppet = Pressure x Seal area x Stroke

Energy for spool = Seal friction x Stroke

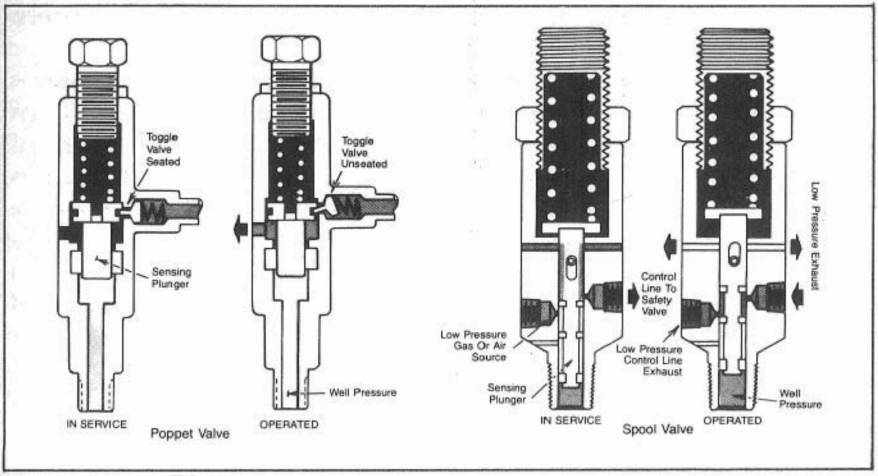

Fig. 10.8 *Types of valves used in monitor pilots*

Both types of valves require some distance through which the valve must be moved. The minimum stroke is limited by the amount of flow area required. Both types require less energy at lower pressure. Spool valve friction minimum is limited by the seal (usually O-ring), interference, and coefficient of friction. Poppet valve seating area is limited by the required flow area.

Spool valves are inherently more adaptable than poppet valves for three-way valves, but the added seal friction can be a problem. It is preferred that the block and bleed functions be simultaneous, but bleed before block is better if they are not. This helps insure that if the plunger fails to stroke the pilot valve completely, the bleed will tend to actuate, and will indicate at least some malfunction.

It is desirable that pilot valves have at least some snap action to limit the weeping that may occur near the actuation point. Unfortunately any snap action increases the deadband. Some deadband results from breakaway friction and the dropping of pressure force on the seating area of a poppet valve.

Practical size limitations keep spring rates high. Desirable springs have large forces (pounds) and low rates (pounds per inch of deflection), but such springs require unreasonably long housings and adjustment screws. The low rate decreases deadband by decreasing the force change through the valve stroke distance.

Low rate also makes setting adjustment more sensitive. For this reason, if a pilot is available with several springs for different adjustment ranges, it is best to pick one that will be set somewhere between mid-range and the top 15% of the range.

A pilot that senses one pressure and controls another pressure that is relatively high (more than about 250 psi) presents a very difficult design problem. The valving energy problem is added to the problems of making a leak tight seal that isn't torn up by flow. Additionally, it is difficult to prevent the pilot setting from being sensitive to the pressure of control fluid.

Operational features that are not a part of the primary pilot function are sometimes incorporated into pilots. These features aid in the use of the pilots. Some of these are:

1. Calibrated setting dial
2. Sensed pressure gage
3. Output pressure to SSV
4. Above-or-below range indication
5. Supply pressure gage
6. Manual actuation or override

These features come at some costs which include:

1. Added expense.

2. Complexity—More features usually mean more parts, making malfunctions more difficult to repair.

3. Size—To prevent isolation of the sensor from the pressure source by freezing, it is highly desirable to mount the pilot as close to the flow line as possible, with as large a port as practical. Large pilots inhibit this because of mounting problems.

4. Accessibility—Pilots for pressure vessels, such as separators, should be mounted near the top in the gas section. To prevent freezing and reduce the hazard of small high pressure lines breaking, it is desirable to have the pilot at the point of sensing. Indicators are hard to read "up there".

5. Accuracy—Calibrated dials tend to reduce the accuracy of a setting compared to the use of a reference pressure. The tendency can be overcome in a limited range by careful calibration, but it will still exist.

6. Fragility—Size contributes to the danger of a pilot breaking off at the connection if not carefully braced.

Pressure sensing pilots, those that actuate when the preset limits are exceeded for the following conditions, are available: *High pressure; low pressure; and high-or-low pressure.*

The combined function doubles the usefulness without doubling the number of leak hazard points or parts. The added complexity does increase maintenance problems for untrained personnel.

Often the simplicity of a single function pilot design will permit it to be used as either a high pressure pilot or a low pressure pilot depending on how it is assembled or plumbed.

Pressure sensing pilots-Electrical

The choice of electrical pilots over mechanical pilots must be made with many factors in mind. The entire installation instrument and control system must be considered. The advantages of this approach are:

1. Sensitivity—Using two energy systems permits taking advantage of the best of both.
2. Remote monitor—Complexity of wiring is not considered normally as serious a limitation in electrical systems as in mechanical systems. Components in the control system normally are connected directly to a central control panel anyway, so the monitoring of its function is a simple addition.
3. Telemetry interface—The form of the information is usually such that incorporating it into remote telemetering is simple.
4. Remote control—The principles of monitoring apply to control.

Disadvantages of these systems include:

1. Dependability—In adverse conditions short duration power fluctuations can shut down the entire platform.
2. Moisture—Salt air and hurricanes are a serious enemy of electrical circuits. Contacts corrode. Moisture causes shorts.
3. Complexity—Maintenance by anyone but highly trained specialists usually is done on a replacement basis. Even this may require an electrician.
4. Fire—Explosion proofing of electrical equipment, making it intrinsically safe, or both, is mandatory.

Careful design of the installation and equipment can overcome the disadvantages and make the use of electrical pilots in some applications preferable.

The two main types of electrical pilots are: mechanical actuation of a switch; and variable electrical signal transducer sensed electronically.

The former type is a simple pressure switch, the sensors for which are the same as those for mechanical pilots, bourdon tubes, bellows, diaphragms, plungers, and pistons. The main advantage in sensitivity is limited by the fact that it requires energy from the sensor to actuate the switch. Mechanical switches usually have contact corrosion problems. Magnetic switches have sensitivity problems.

The latter type of pilot is potentially more sensitive, accurate, and flexible. The sensor is usually a diaphragm with a strain gage. The electrical characteristics of the sensor are manipulated with sophisticated electronics, and an output signal is used to control the safety valve, usually with a solenoid valve.

Pressure sensing pilots—mechanical/direct

Pilots that control the pressure they sense usually have poppet valves that balance the valve seating force against the spring (Fig. 10.9).

When the unseating force exceeds the force holding the valve on seat, it actuates. Low pressure pilots have the spring trying to open the valve against pressure and high pressure pilots have the pressure trying to unseat the valve.

The pilot valving system usually must be a three-way valve system to prevent continous bleed. The block function of the three-way valve may be a part of the sensing valve. Or, a velocity check valve may be used with a two-way bleed type pilot.

Another type of pilot is one that has the valve held on seat with a latch mechanism. A sensing plunger operating against a spring system releases the latch holding the valve when the pressures exceed the set range. To keep latching loads to a minimum, all forces need to be minimized. Unfortunately, friction loads do not decrease as fast as actuating forces, so friction is relatively high.

Direct system pilot seat seals are designed for high performance. They must seal bubble tight against high and low gas pressure, and they must not tear when the valve is opened with full pressure differential. The sealing diameter also must be accurately defined and stable. To accomplish all these requirements, a multiple piece seat with an elastomer or plastic seal ring is used. Equally important is that the valve be opened with a snap action to reduce the tendency of the flow to tear the seal.

Some provision must be made for resetting the pilot without affecting the set point adjustment. In many situations, it may be

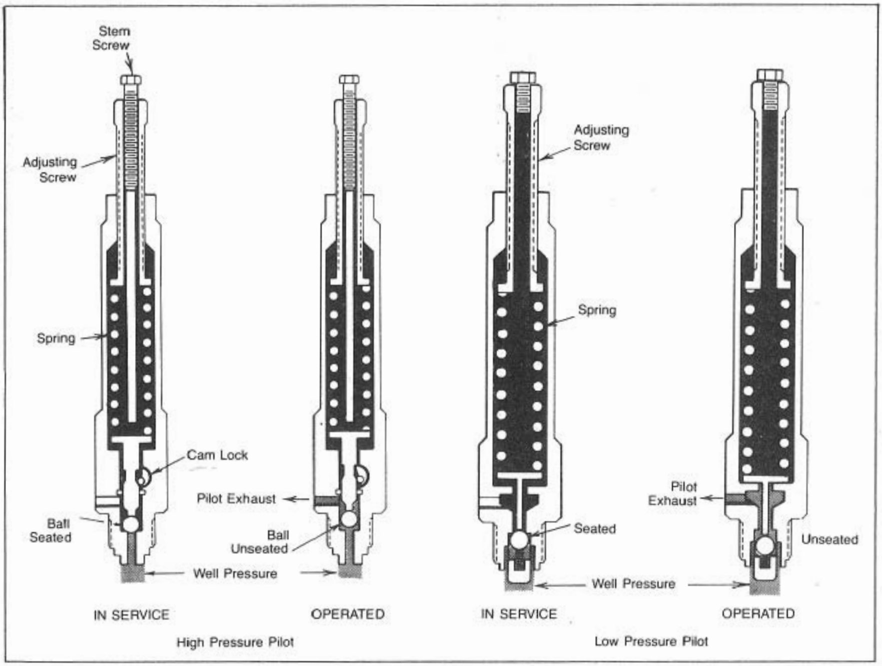

Fig. 10.9 *Direct controlled pressure pilot*

necessary to lock the pilot out of service. This usually is necessary in order to get the system back into service (without actuating the pilots) until the flowing pressures have stabilized. This can be done by overcoming the actuation force or removing it. Pilots are made both ways.

Pressure difference pilot

Pressure difference pilots (Fig. 10.10) are suitable for use with an orifice in the flow line to detect excess flow. Such a safety system is insensitive to pressure in the line.

Pipelines and gas storage wells can be protected from flow line failure by sensing flow in either or both directions, even though the system pressure may vary through a wide range.

The pilot has a spring biased piston or diaphragm. When the pressure across the piston exceeds the spring force, a valve is actuated. If the pilot must be sensitive from both directions, then two springs must

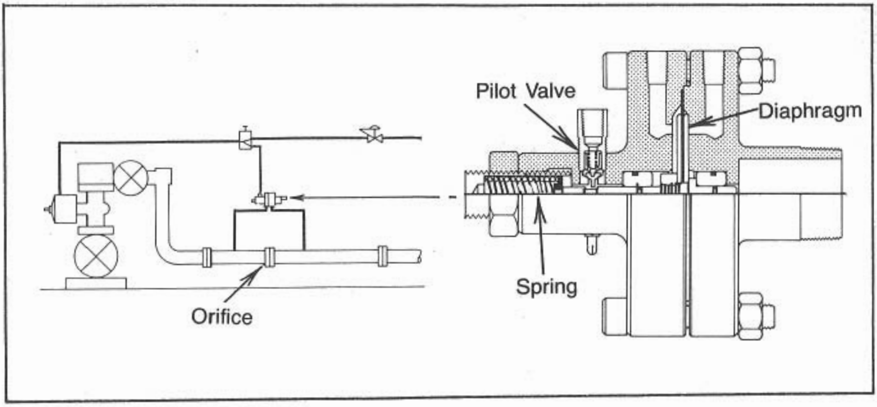

Fig. 10.10 *Pressure difference pilot*

bias the piston to the center position and the valve must actuate in either direction.

If a diaphragm is used, it must be protected from overpressure and from rupture.

The piston or diaphragm that senses the difference of the two pressures must be connected through a pressure seal to the valve. If this seal presents an unbalanced seal area, the pilot will be sensitive to some extent to the sensed pressure, not just to the pressure difference.

One application of the pressure difference pilot is as a part of a rate of pressure change pilot system.

Rate of pressure change

Gas storage wells and pipelines can be protected also by a pilot that senses a rate of pressure decrease (Fig. 10.11). Even though the system pressure may vary slowly, over a wide range, rapid changes due to line failure can be detected. Normally, the change that is of most concern is a drop in pressure.

The pilot works by sensing pressure drop across a small orifice between the sensed pressure and a volume chamber. When pressure decreases in the flow line, gas in the volume chamber starts flowing out. Flow is restricted by the orifice, so a pressure difference develops that is sensed by the pressure difference pilot.

Sensitivity is adjusted by the combination of volume chamber size, orifice size, spring force, and piston or diaphragm size. The usual

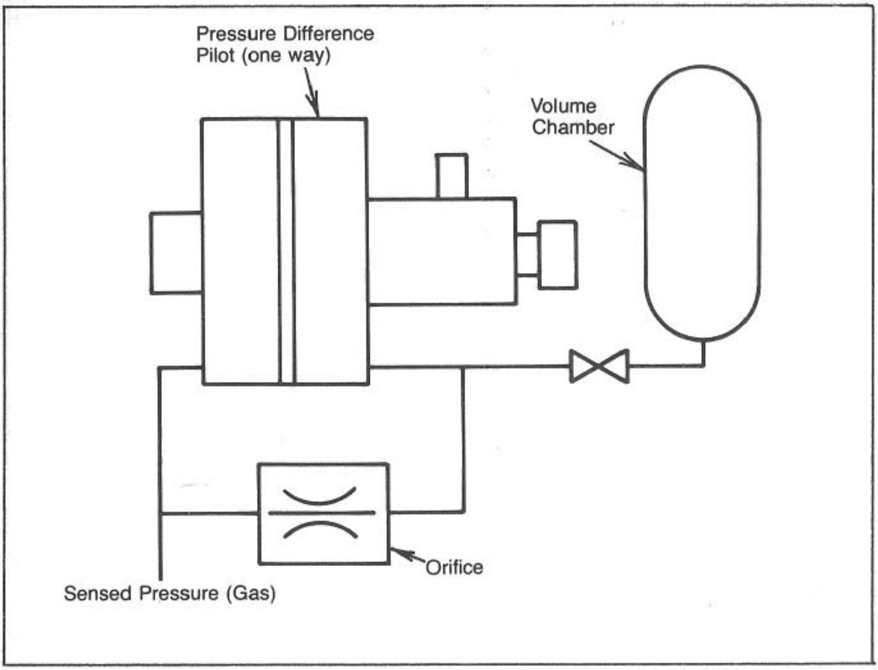

Fig. 10.11 *Rate of pressure change (decrease) pilot*

practice is to make step changes in orifice diameter and make fine adjustments with spring force.

Liquid Level

Most liquid level sensing pilots in the oilfield use a float. The float is designed to float on one fluid and sink in the lighter fluid on top. The interfaces between gas and oil, and oil and water need to be monitored in separators to shut down flow in the event the primary control system fails.

Some units are adjustable over a range by adjustment of the float arm. Some have the float operating in a tube on a flexible cable loop. On some the only adjustment is where the unit is installed in the vessel.

There must be a pressure barrier between the float mechanism and the valve or switch mechanism. Some magnetic reed switch types have a solid metal wall barrier. Many have a shaft that passes through a moving seal.

Vessels with a lot of turbulence may require a stilling well to prevent damage to the float mechanism.

Normally, the float-type level sensing pilots are sensitive enough not to need special valves which require little energy to actuate at the normal system pressure.

Fire or heat sensing

Fire is a very serious problem that must be sensed as reliably as possible. Often there is no escape from a platform, so stopping a fire as soon as possible is of utmost importance. Fires are not sensed directly. The effects that can be sensed are heat and light. Fires occupy a volume in space and they affect a volume that is not much larger. Sensor type and location are therefore important. Heat is sensed by its effect on materials. Some sensors are based on the melting (fusing) of a component (Fig. 10.12). The component may be a low melting point alloy plug in the pneumatic control line loop or plastic section of the line.

The maximum pressure that a fusible plug can sustain for a long period of time is generally less than 500 psi because of the creep strength of the alloy. Plastic tubing has much lower long term strength. The temperature at which fusible plugs melt is quite accurate and is not affected to any great extent by pressure within the operating range.

Plastic tubing will begin "ballooning" slowly and may fail at nearly atmospheric temperature if the pressure is very high. Fusible plugs are structurally rugged and do not need protection from most physical abuse. The installation is also as neat and organized as the rest of the plumbing.

Plastic tubing needs protection from mechanical damage and is subject to long term degradation by ultraviolet radiation from the sun if not protected by a shell or pigmentation. Fusible plugs sense only at a point, whereas plastic tubing senses over a distance, thus greatly extending its range of sensitivity.

With fusible plugs and tubing, there is no such thing as a block and bleed system. All fusible loops are bleed only. Regardless of that, the system will operate and the relay valve will prevent continuous bleeding.

API RP14-C has some guidelines (Fig. 10.13) for placement of fusible plugs. The guidelines are based upon area hazard and vessel size.

Heat can be sensed also by expansion of a material. Liquid volume or pressure change can activate a device such as a valve or switch. Force developed by a bimetal strip also can be used. Expansion devices are

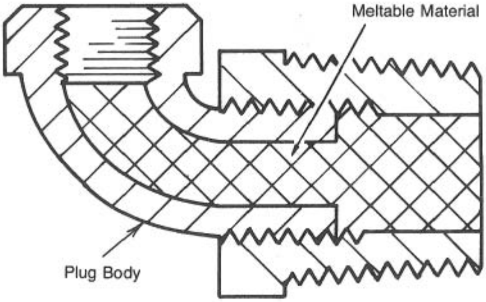

Fig. 10.12 *Fusible plug (heat sensitive)*

used to detect flameouts in fired vessels. Fusible links in an electrical line can be used as well.

Flames have a high percentage of ultraviolet light. This characterisitc makes visual detection easy and reliable. Ultraviolet light detectors have the distinct advantage of being able to detect over a large volume of the location. They can see the flame when it is small and then quickly activate the alarm and shut-in systems.

There is a speed limit though. At one time, bolts of lightning and electric welders shut in some platforms and deluged everything with water. Because of that, time delays were built into the circuitry. The logic circuitry also compensates for the wide variation in the ultraviolet in sunlight from night to day. The pilot logic circuity is taught that the sun is not snap acting.

Since light detectors cannot see around corners, their placement is critical. They share the limitations of other electronic devices because they are constant power consumers and must be protected from temporary power interruptions. They must be protected from blinding caused by films on the lenses or other equipment in the line of sight.

Manual control

The emergency shut down system (ESD) can be actuated by several sources, such as manual quick opening valves. The valves should be

Component	Fusible Plug Arrangement	Mininum Number of Plugs
Wellheads	One over each wellhead	—
Headers:	One for each 10-feet of header length.	2
Pressure Vessels:		
Vertical Vessel:	One for each 12-inches of OD to a maximum of five.	1
Horizontal Vessel:	a. Less than 48-inch OD to One for each 5-feet of length	1
	b. Greater than 48-inch OD—Two for each 5-feet of length in two parallel rows.	4
Atmospheric Vessel:	One for each vessel process inlet and outlet, and hatch.	—
Fired Vessels:	Same as pressure vessels. Additionally, one outside the flame arrestor.	—
Pumps:		
Reciprocating:	One over rod packing.	—
Centrifugal:	One over each packing box.	—
Driver:	a. Spark ignition—One over each carburetor or fuel injection valve.*	—
	b. Diesel—One over each and pump supplying injectors.*	—
	c. Turbine—One for each fuel solenoid, governor valve, and PTO pump.*	—
Compressors:		
Reciprocating:	One for each cylinder.*	—
Centrifugal:	One over compressor case.	—
Driver:	Same as for pumps.*	—

* OR EQUIVALENT COVERAGE

Fig. 10.13 *Guidelines for placement of fusible plugs. Courtesy of API (RP-14C) Second Edition.*

placed in prominent locations near all the personnel passageways such as:

1. Living quarters exits
2. Helicopter deck
3. Exit stairways at each deck
4. Boat landings
5. Centers of bridges
6. Emergency evacuation boat stations

These "panic buttons" or "chicken switches" need to be easy to find, obviously labeled, and protected from false operation. The operation should be simple and obvious. Anyone who needs to operate the ESD system does not have time to study anything. He just wants to push or pull something and run to a safer place.

These very critical valves should be made of corrosion resistant materials and have large flow ports for quick response of the system. A loop of plastic tubing at the boat landing or splash zone makes a good "valve". It can be opened easily with a boat hook. As with the other valves, it needs to be protected from accidental operation and yet be obvious and easy to get to.

Erosion

High velocity flow rate, turbulence, and entrained solids all contribute to erosive wear. Sand producing wells and equipment downstream need to be continously monitored for damage by erosion, corrosion, and the combination of erosion and corrosion. Metal loss due to the combination occurs more rapidly than due to either effect alone because the protective oxide coating that forms is washed away by flow.

Erosion occurs when entrained particles hit the wall and knock off a portion of it. Erosion rate is controlled by several factors, the most significant of which are velocity and angle of impact. The most effective ways to minimize erosion are to reduce velocity and to make only gentle bends in the piping. Where there is high velocity (downstream of a choke) or where the direction of flow is changed rapidly (elbow or tee), special precautions should be taken to protect and monitor the piping.

Monitoring the piping can be done in several ways:

1. Visual—Looking at the inside of the piping requires disassembly. This is a positive and sometimes necessary procedure, but it is very expensive in terms of labor and lost production. If the damage is

inspected visually, it should be measured carefully and documented, not merely inspected for usability. The progressive wear data is valuable for prediction and correlation with other methods.

2. Radiographic—X-ray or gamma ray measurements of the film can give some degree of wall thickness measurement accuracy, but not much. Even then the film should be exposed by a source in the center of the pipe. The film should be wrapped around the pipe.

3. Ultrasonic—Measurement of wall thickness with high frequency sound waves is relatively easy and not too expensive. The measurement accuracy is good, and small area damage can be discriminated well. Next to visual, this is the most accurate way of measuring damage.

4. Erosion probe—A probe does not indicate erosion damage of the piping. It only indicates damage to the probe. When probe wear and pipe wear are measured, though, the probe wear can be used as a general indicator of damage to the pipe. Wear rates are proportional. The same factors that affect one (such as flow rate, time, and sand content) affect the other.

Another way to detect erosion damage, a way that normally is not considered acceptable but is used extensively, is perforation. After so long a time, enough of the pipe wall will erode away to cause a leak. Even if the leak is detected soon, the spilled hydrocarbons present a serious fire hazard.

Detecting the leak automatically is very difficult.

Most leaks are detected with a pressure sensor sensing a drop in system pressure. But if there is a large enough pressure drop for a low pressure pilot to actuate, the leak is of major proportion and is very serious. It is far better to fix the leak before it becomes serious than it is to risk an entire platform.

Most erosion probes are small diameter closed tubes that are inserted into the flow stream. When enough of the probe wall is worn away a hole forms and the line pressure is admitted inside it. The probe is connected to some type of indicator or pilot (Fig. 10.14). Since probe failure is not system failure, there is some difference of opinion as to what should be done with the signal.

Indication sometimes is just an increased reading on a gage attached to the adapter. Pilot valves are available to produce a signal on a control panel or to sound an alarm. The pilot can be used to shut the safety valve. Shutdown demands immediate attention. Pressure readings don't, and may result in the warning being overlooked.

An indicator on a control panel is more persistent than is a pressure gage out on the header. An audible warning is even more demanding, but it won't actually shut in production.

Pilot valves can be two-way or three-way and can have an indicator to show which of several possible pilots is the one that causes the alarm. A switch can also be used.

Wall thickness, material, heat treatment, and length are the main

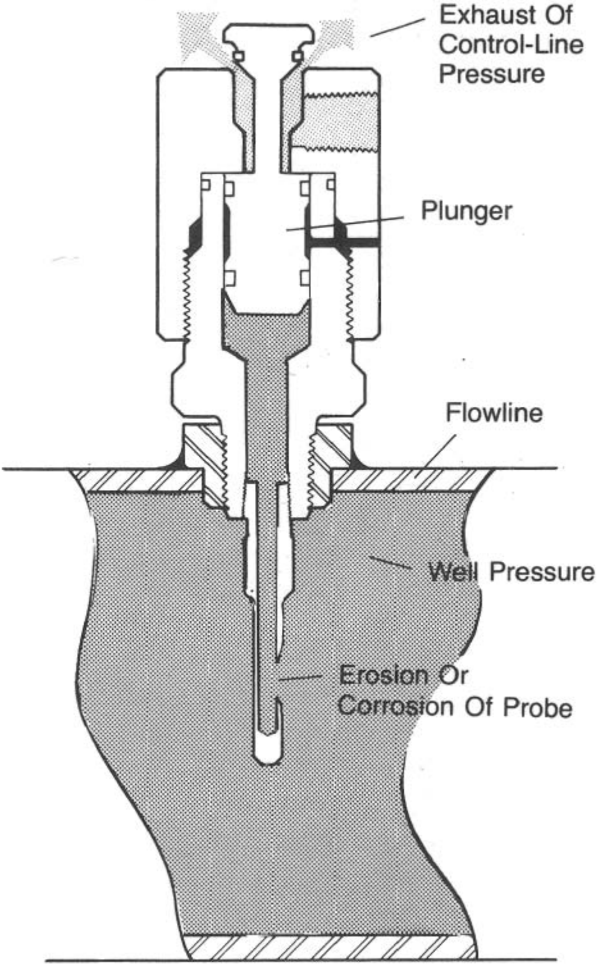

Fig. 10.14 *Erosion probe and pilot*

variables in probes. Since several probes may fail before the piping must be repaired, greater accuracy can be obtained with a greater number of probes between overhauls. This means the probe wall needs to be thin.

The limit on how thin the wall can be is the amount of pressure that must be held. If the wall is too thin, the tube will collapse from external pressure. Material strength may not help when the wall is thin compared to the diameter, because it may collapse elastically. Manufacturing tolerances become large compared to wall thickness in the very thin walled probes. That can affect the overall accuracy.

Material choice affects the probe's sensitivity to corrosion and hydrogen atom transmission. The piping may be suffering from the combined effects of corrosion and erosion. Though it may be desirable

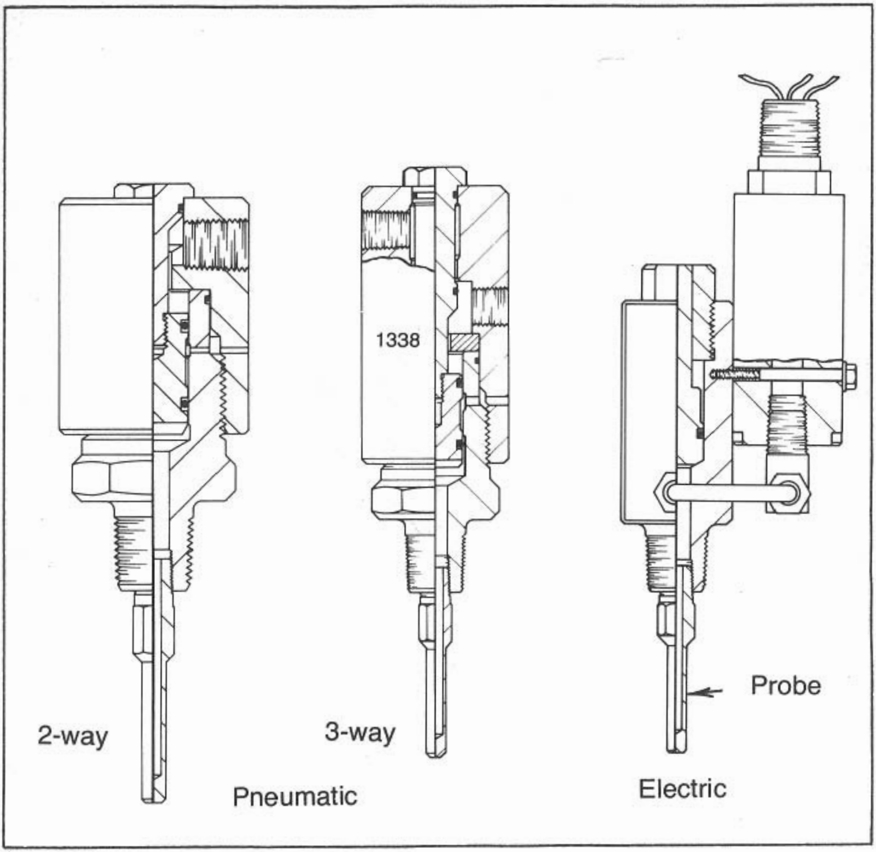

Fig. 10.15 *Erosion pilots*

to have the probe equally sensitive, the chances of actually duplicating the pipe material in the probe are slim.

Part of the problem is that the materials are not made nor treated in the same way. The alloys won't be exactly the same, and any small difference will greatly affect the relative nobility of the two alloys on the galvanic scale. In one case the pipe will cathodically protect the probe and in the other the probe will become the sacrificial anode, thereby accellerating corrosion.

Another problem is that the wall thickness on the thin probe is in the order of magnitude of metallurgical grain size. Variations of material are very large, percentage wise, in the wall. Most flow lines and headers are made of low alloy or carbon steel. Probes of this type of material will let atoms of hydrogen pass through the molecular structure of the metal.

Although the amount transmitted is small, the pressure inside the tube can build up to an extremely high value. Austenitic stainless steels (304, 316) do not normally corrode nor transmit hydrogen, so they generally are preferred over alloy steel. Where pressures are higher than the austenitic stainless (300 series) can handle, a martensitic stainless (410, 416) can be used, but manufacturing is much more difficult.

In pipe where erosion is a problem, the flow velocity is nearly the same all the way across the inside (Fig. 10.16). An exception is where the pipe is not straight. This nearly constant flow profile makes it unnecessary to have very long probes.

Long probes tend to vibrate and fail by fatigue. Probes with thin sections longer than about 1.0 or 1.5 in. of exposed length do not offer any extra advantage.

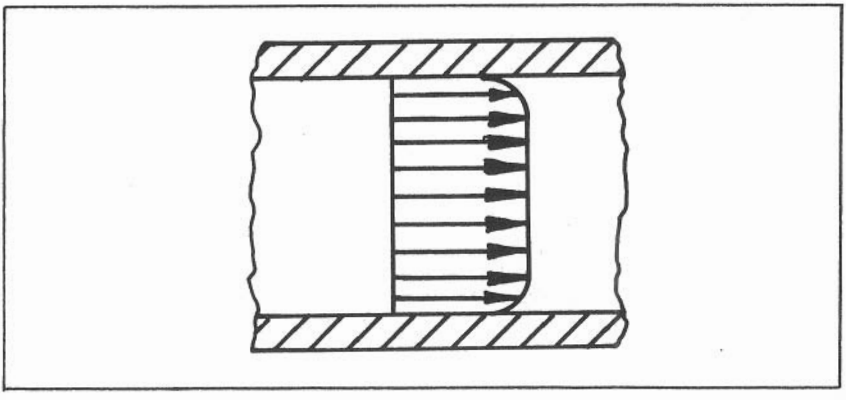

Fig. 10.16 *Velocity profile in turbulent flow*

The probe should be placed in the flow stream so flow is 90° from the probe length (Fig. 10.17). It should be at least 10 pipe diameters downstream from a choke. For 2-in. ID pipe this means it should be 20 in. from the choke for the extreme turbulence to damp and for the flow to be even all the way across the inside of the pipe. Where the pipe is curved, place the probe toward the outer side of the bend.

In some cases it may be impractical to use, or depend upon, a probe in such high risk areas as a header or the first elbow after a choke. In these cases a scab plate (Fig. 10.18) welded on the small high risk area can contain the pressure after the main wall has been perforated. The perforation would be detected by an increase in pressure under the scab.

Pneumatic relay valves for bleed monitor pilots

Remote sensing pilots usually are used in conjunction with some sort of relay valving to perform several control functions in addition to the primary purpose of responding to the monitor pilots to signal the safety valve to close.

Relay valves should be thought of as actuator pilots. The type of relay depends upon what functions it must perform and the type of system used. A block and bleed monitor pilot needs a relay that only accepts pressure signals from the monitor pilots, whereas a bleed type monitor must have the pressure furnished by the relay valve to the monitor pilots.

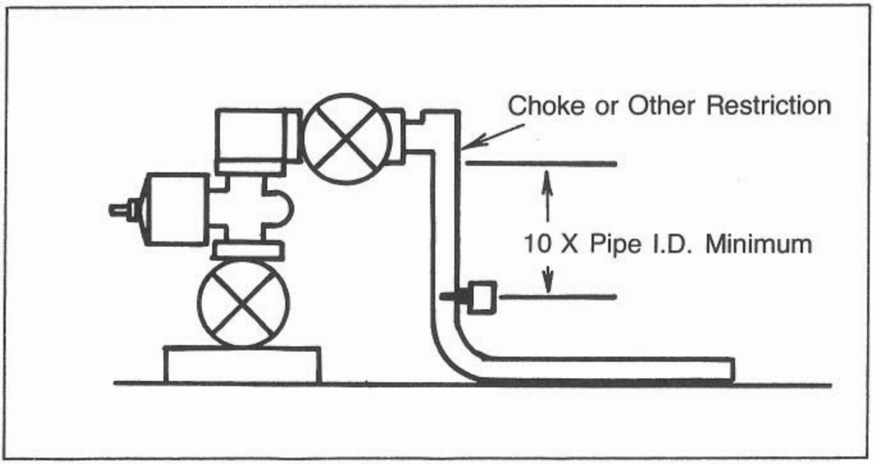

Fig. 10.17 *Probe placement*

Bleed systems use the pressure drop that occurs when a pilot tries to exhaust the supply pressure downstream of a small (usually 0.03-in.) orifice for the force to actuate. Due to flow restriction in the pilot line, the pressure never can get to zero. But it doesn't matter because pressure can drop below the needed value to let the valve actuate, if the pilot line is not too long.

Pneumatic relay valves can have several functions built into them:

1. Block supply and bleed pressure from the SSV actuator
2. Low pressure actuation—When system supply pressure drops below a preset value, the relay valve actuates. This is a safety feature designed to prevent the safety valve from drifting to the partially closed position where it could be ruined by erosion.
3. Manual override and manual reset—The safety valve can be manually closed with the relay. To initially open the system, the handle must be operated.
4. Two-pressure operation—Where the pressure required by the safety valve is high (more than 150 psi), a ratio piston exhaust valve is added to permit the use of 30-psi pilot line pressure, or less.
5. Auto arming—The standard design of a relay valve requires manually holding the valve open until flow line pressure stabilizes within the normal range and the pilots quit bleeding.

The valve can be made so that it needs to be held only momentarily. When the pilots go into range and quit bleeding, the relay valve switches into the automatic mode (auto arming) and will actuate if a monitor pilot reopens. Pumpers and other field people like this feature a lot because it is so convenient. Unfortunately, there is the serious risk that the monitor

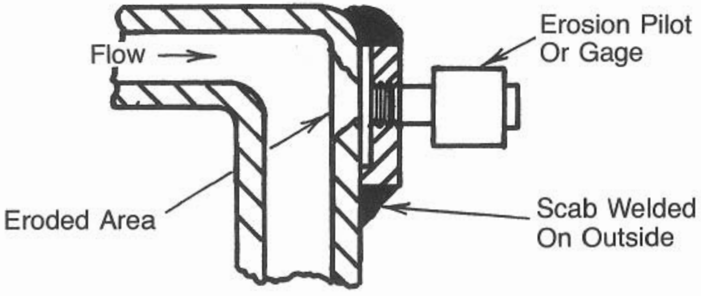

Fig. 10.18 *Perforation detection with scab*

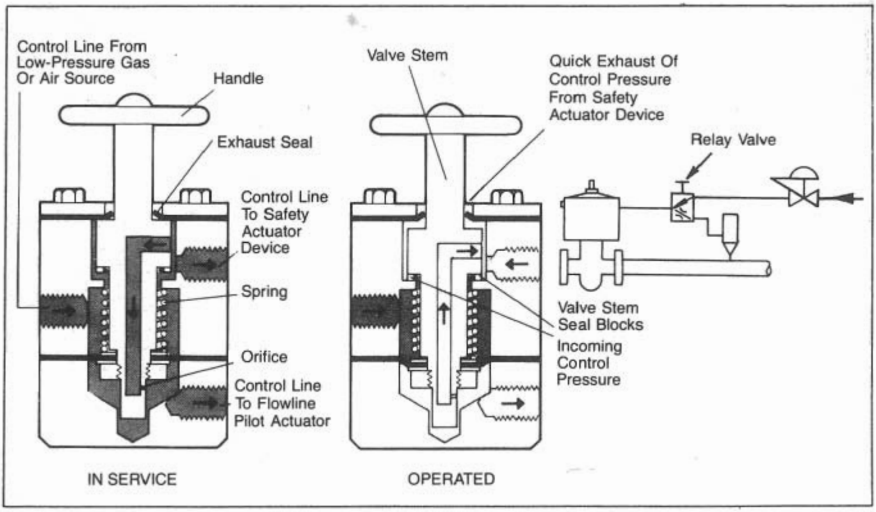

Fig. 10.19 *Relay valve for bleed system*

pilot may not close the first time, leaving the safety system out of service. Use of this feature should be made with great caution. Interlocks and flags can make the system safe, but the costs in complexity and money need to be considered along with convenience.

6. Ported exhaust—This optional feature may be required when the relay valve is used in an enclosed control room. The added seal required increases friction some and reduces smoothness of operation and sensitivity. Size and cost are larger, too.

Relay valves for bleed systems (Fig. 10.19) may have the orifice feeding the pilot line inside the valve. Pressure for the pilot line comes from the part of the valve that is connected to the port to the SSV.

When the valve is opened (block-exhaust/fill-SSV-cylinder), pressure is admitted to the pilot line. After the relay is actuated (block-supply/bleed-cylinder), pressure is shut off to the pilot line. This means that the system is not a constant bleed system nor is it automatically reset when the sensing pilots go back in service.

The most common relays have poppet type valving. Inherent in the construction is the advantage of large flow area (0.25-in. diameter equivalent), snap action, and stability in both positions (self latching). Poppet valves eliminate the cutting of seals which pass ports and reduce erratic friction forces.

Bolted sandwich construction of some valves offers several advantages:

1. Ruggedness
2. Compactness
3. Orientation of ports—Convenient for panel mounting
4. Easy attachment for panel mounting
5. Simple conversion and addition for features such as ported exhaust and two-pressure operation
6. Ease of maintenance

Diaphragms have friction advantages over the use of sliding seals such as O-rings. With pressures below 30 psi, friction may be important if the pressure area is small and time between operations is very long. In higher pressures the lower strength of the diaphragms gives O-ring seals the advantage. Sliding seals can be made also in smaller sizes. The smaller sizes reduce to an acceptable level the forces that must be overcome by hand operation in high pressure valves.

Corrosion resistant materials are mandatory for reliability. This is especially important offshore.

Pneumatic relay valves for block and bleed monitor pilots

Most relay valves that are used for systems with block and bleed monitor pilots are either the two-pressure system pilot described above or a piston operated spool valve type. Low pressure protection is provided by a spring return on the piston. Latching may be accomplished by mechanical spring biased latches which restrain the piston. In some cases, the latch can be left disabled so that the safety valve can reopen if the sensing pilot goes back in service.

Solenoid Valve

Electrical relay valves are solenoid valves. The most common are direct acting poppet valve types. Two-way and three-way valves can be normally open (N/0) or normally closed (N/C). Normally closed means that a spring will close the valve when the power is removed. Normally closed for a three-way valve means that with no electrical power on, the inlet will be blocked and the exhaust will be open. Two-way valves usually are normally open, whereas three-way valves usually are normally closed.

Manual overrides are available and are a convenient way to provide override capability for startup. Latching relays are available, too. A latching relay requires only a momentary pulse of power to shift it to one position, but another pulse is required to release it back. Such a feature is obviously not fail-safe.

In some specialty cases where very little electrical power is available in a remote location, latching relays can be used if reliable standby power is available and special circuitry is provided to shut down the system when primary power is interrupted or reduced.

As with all electrical equipment used in hazardous areas the solenoids must be explosion proof. The coils should be weather proof and rated for continuous service.

The force that can be developed by a solenoid with a reasonable amount of power consumption seriously limits the pressure rating of a solenoid valve. Valves for 3000 psi hydraulic pressure are readily available, but most of them are lapped spool valves. They work well for clean hydraulic power systems that are operated frequently.

But safety systems are normally static systems that may sit for weeks between operations. Under this type of service the valves will have a tendency to silt up and stick. Poppet type high pressure solenoid valves have very small ports and plastic seats that really don't last very long. They are also high priced, high power consumers which are not widely available.

For these reasons, their most common applications are in pneumatic systems. Where it is necessary to control hydraulic pressures with a solenoid valve, a ratio piston control valve should be used. The higher force available for seating gives better results.

Force limits determine flow port size, also. Commonly 0.06-in. and 0.09-in. orifices are used for pneumatic pressures needed for SSV's.

Pneumatic/hydraulic relay

Some systems require hydraulic control of safety valves, such as surface controlled subsurface safety valves and low ratio surface safety valves. These systems need an actuator pilot valve that will sense pneumatic control pressure and control the hydraulic pressure to the safety valve (Fig. 10.20).

As in all safety system design, "control" means on-off type control, not variable flow rate control. The control can be two-way or three-way (block and bleed). Ratio piston, poppet valve designs are usually the most successful. Since the system must be fail safe, a spring and/or pressure must actuate the valve when control pressure is removed from

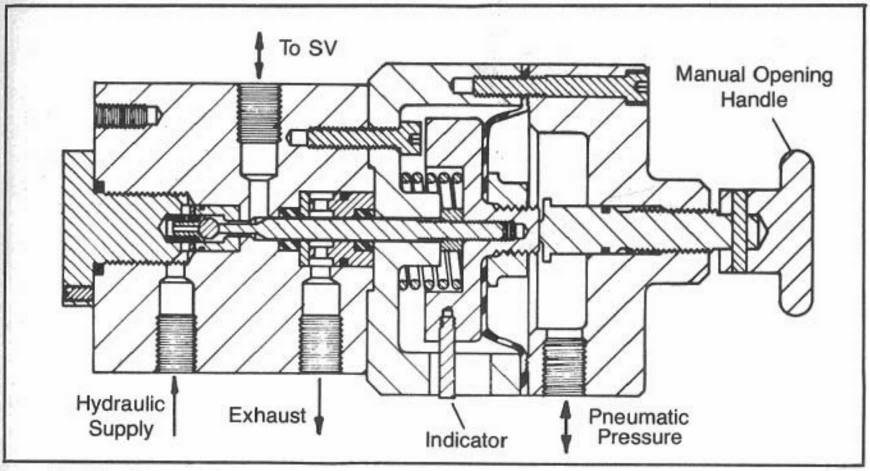

Fig. 10.20 *Pneumatic/hydraulic relay valve, three-way*

the piston. Most system designs require some type of manual override for initial start up. One of the more convenient places for the manual opening control is on the pneumatic/hydraulic relay.

Usually the easiest way to provide the mechanical manual override feature is to have a screw jack substitute force for piston pressure. Functionally, it is very simple and reliable, but it does not lend itself to insuring that the system will not be left out of service.

A safer design is one that has a lever which must be pulled out. The lever is much more obvious and can be incorporated in an interlock or flag system to reduce the risk of inadvertently leaving the system in an unsafe condition.

Fig. 10.21 is a pneumatic/hydraulic relay valve with lever type manual override for more obvious condition indication.

The problems of high pressure valve sealing are present in this type of valve. The problems are reduced somewhat, compared to monitor-actuator pilots, because of the high excess seating forces available and because the fluid being sealed is a liquid.

Choice of valve size is dependent on the application. Most cases require only a small flow area to bleed the few cubic inches of less than ten downhole safety valve pistons' displacement. In installations where the tubing-casing annulus is used as the control line, and/or with hydraulic SSV's, the relay must handle a much larger flow. If closure time must be minimized, multiple valves or a larger valve must be used. Larger valve designs change the construction problems and installation design.

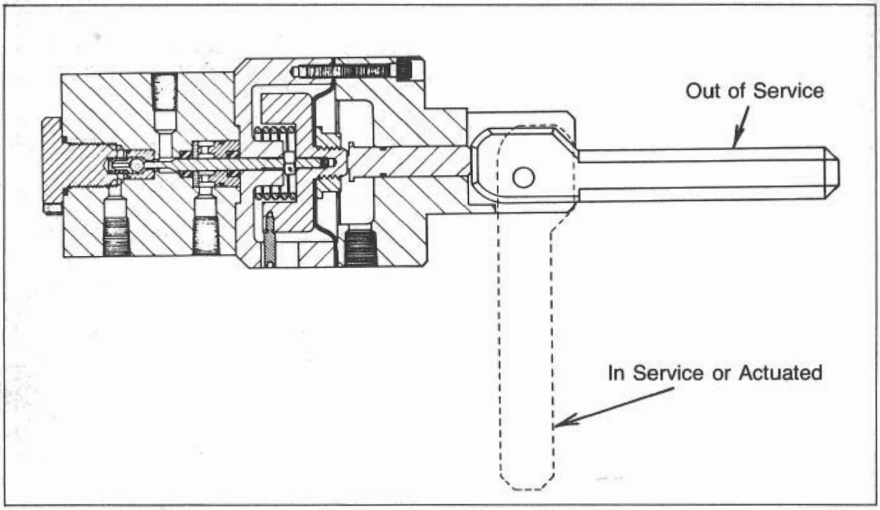

Fig. 10.21 *Pneumatic/hydraulic relay valve with lever type manual override for more obvious condition indication*

Quick exhaust valve

The time to close a safety system is the total of:

1. Time for initial failure to be detectable. For example, after a valve sticks there will be a delay before the vessel pressure reaches the sensor setting.
2. Reaction time of the sensor.
3. Bleed-down time of sensing pilot line.
4. Reaction time of the relay valve.
5. Bleed-down time of the safety valve pressure.
6. Reaction time of the safety valve.

The largest volume that must be bled is the compressed fluid between the relay valve and the safety valve piston. To reduce the system reaction time, a quick exhaust valve may be used (Fig. 10.22). Hydraulic relay valves normally are used only on annular control line completions of downhole safety valves. Pneumatic quick exhaust valves usually are mounted on the safety valve cylinder.

Pneumatic quick exhaust valves most commonly used have a flexible rubber disc as the valve member. In the no-flow condition the disc edge seals against the inlet side of the housing, and the center seals the exhaust port. Pressure can pass the inlet seal like a check valve. The same pressure keeps the exhaust sealed. When inlet pressure is reduced,

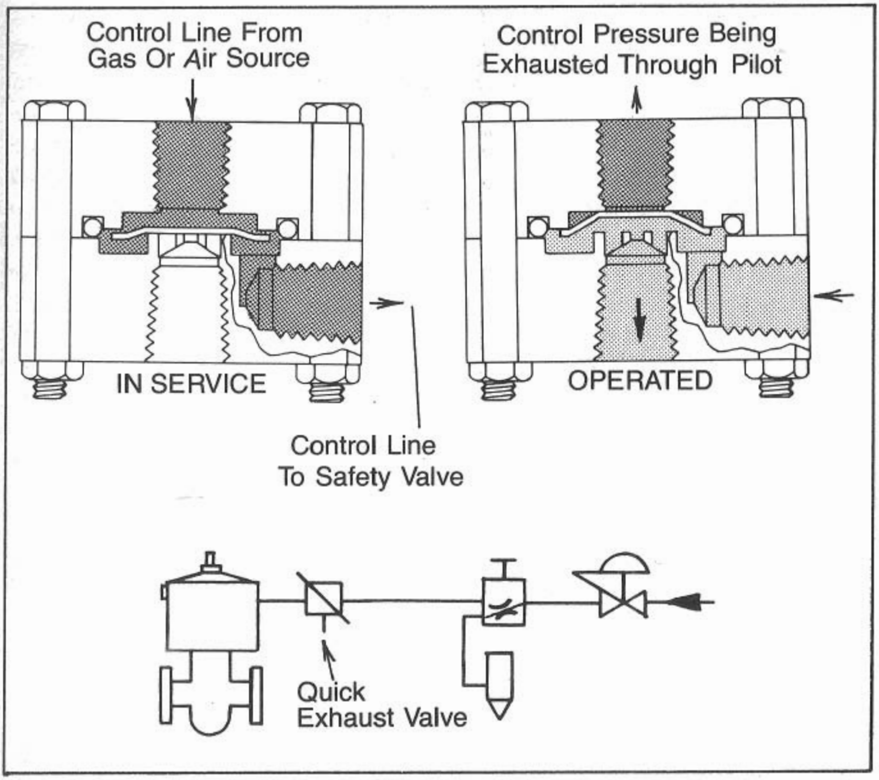

Fig. 10.22 *Quick exhaust valve for speeding closure*

the disc seals like a check valve, and reversed pressure across the disc area lifts the disc off the exhaust port to let the cylinder pressure flow out. The large area ratio of the disc to the exhaust port seal lets the exhaust valve actuate with only a small inlet pressure drop.

High pneumatic pressures require design modifications to stiffen the diaphragm function and strengthen the seals. The principle of operation is the same. Hydraulic quick exhaust valves require an inlet orifice, or spring, to bias the valve to the closed position. Otherwise, the function is the same as for pneumatic types. Exhaust ports are provided with threaded connections for piping the exhaust.

Hydraulic isolator

If for any reason the surface controlled downhole safety valve fails to keep well fluids from the control line, uncontrolled flow will occur when the hydraulic control manifold releases control line pressure.

A hydraulic isolator used on surface controlled subsurface safety valve control line to limit hazard if safety valve seals fail is shown in Fig. 10.23.

A hydraulic isolator in the control line will permit enough unrestricted volume out to close the downhole valve and then restrict further flow. The isolator should be located as close as feasible to the Christmas tree in order to give some protection from damage of the control line.

The isolator consists of a cylinder with a floating piston that has an orifice and is spring biased to one end. Under normal conditions with

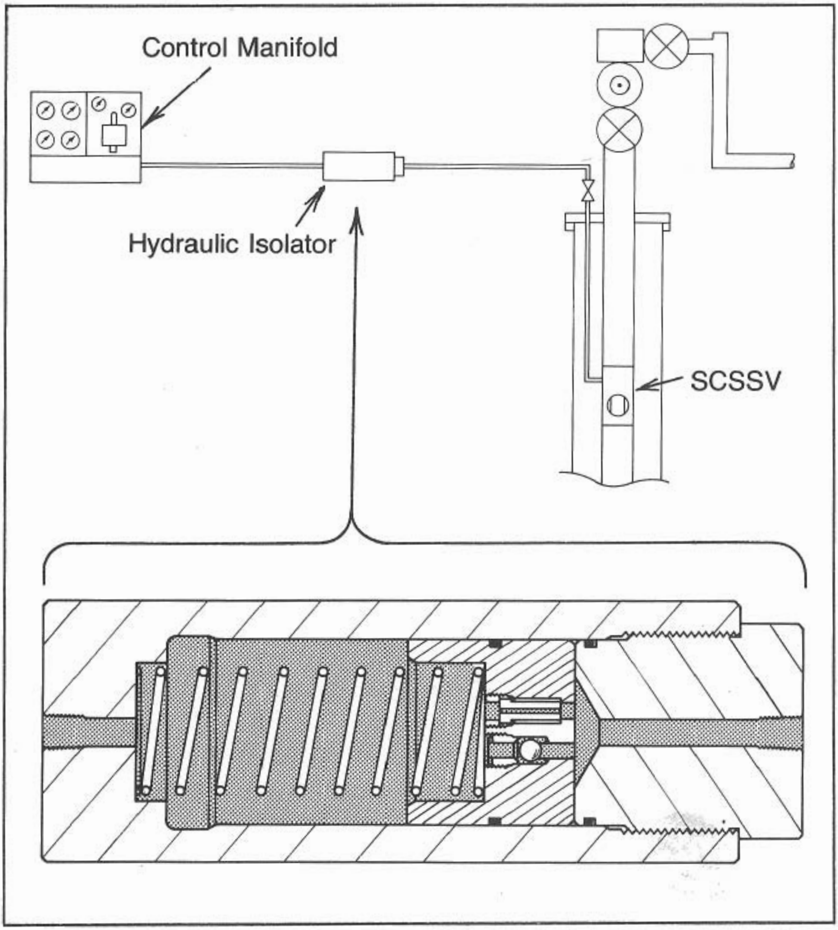

Fig. 10.23 *Hydraulic isolator used on surface controlled subsurface safety valve control line to limit hazard if safety valve seals fail*

the safety valve open, the piston is at the end towards the safety valve. When pressure is released from the line, outflow will displace the piston back to the other end. The displacement of the piston exceeds the safety valve displacement, so normally the piston does not stroke fully.

If there is no safety valve in the nipple, or if the seals fail, the added flow will shoulder the piston and flow will be restricted.

There are two philosophies on restriction. The unit shown in Fig. 10.23 has a hardened orifice that will restrict the amount of flow going to the control manifold reservoir. Flow isn't stopped, but it doesn't rupture the tank. It does reduce the hazard of the failing of an isolator to fully stroke (not letting the safety valve close). The other philosophy is to shut off flow at the end of the stroke. This will prevent pollution from long term leakage that could overflow the spill recovery system.

Both methods have disadvantages, but either is an improvement in security.

First-out indicator

Consider the plight of operating personnel entering a normally unmanned complex platform on which the safety system has shut down everything. All the low pressure sensors have actuated. All the equipment seems in order. What went wrong? What was the first malfunction that caused all the rest? Quite often a freezeup will cause a high pressure pilot to actuate and then the system pressure will drop to below the low range. Unless the monitor is latched in the position in which it actuated, it is of no help in diagnosis.

The answer to this problem is to put recording gages on everything or to have the pilots actuate through first-out indicator relays. The first out indicator is commonly used in a central control console. A series of the indicators are interconnected so that when the first one actuates, it prevents the rest from actuating. The indicator is a mechanical visual indicator that can be seen easily. The group of indicator relays control a pneumatic relay.

The indicator relay (Fig. 10.24) can be furnished with an internal orifice for use with bleed-type monitor pilots; or without for block and bleed monitor pilots. The indicator relay is a three-way poppet valve controlled by an integral piston that is larger than the seal area of the valves. While in service the exhaust is blocked and the inlet is connected to the outlet. When the monitor pilot reduces the pressure from the piston, the exhaust valve opens far enough to begin flowing. Flow

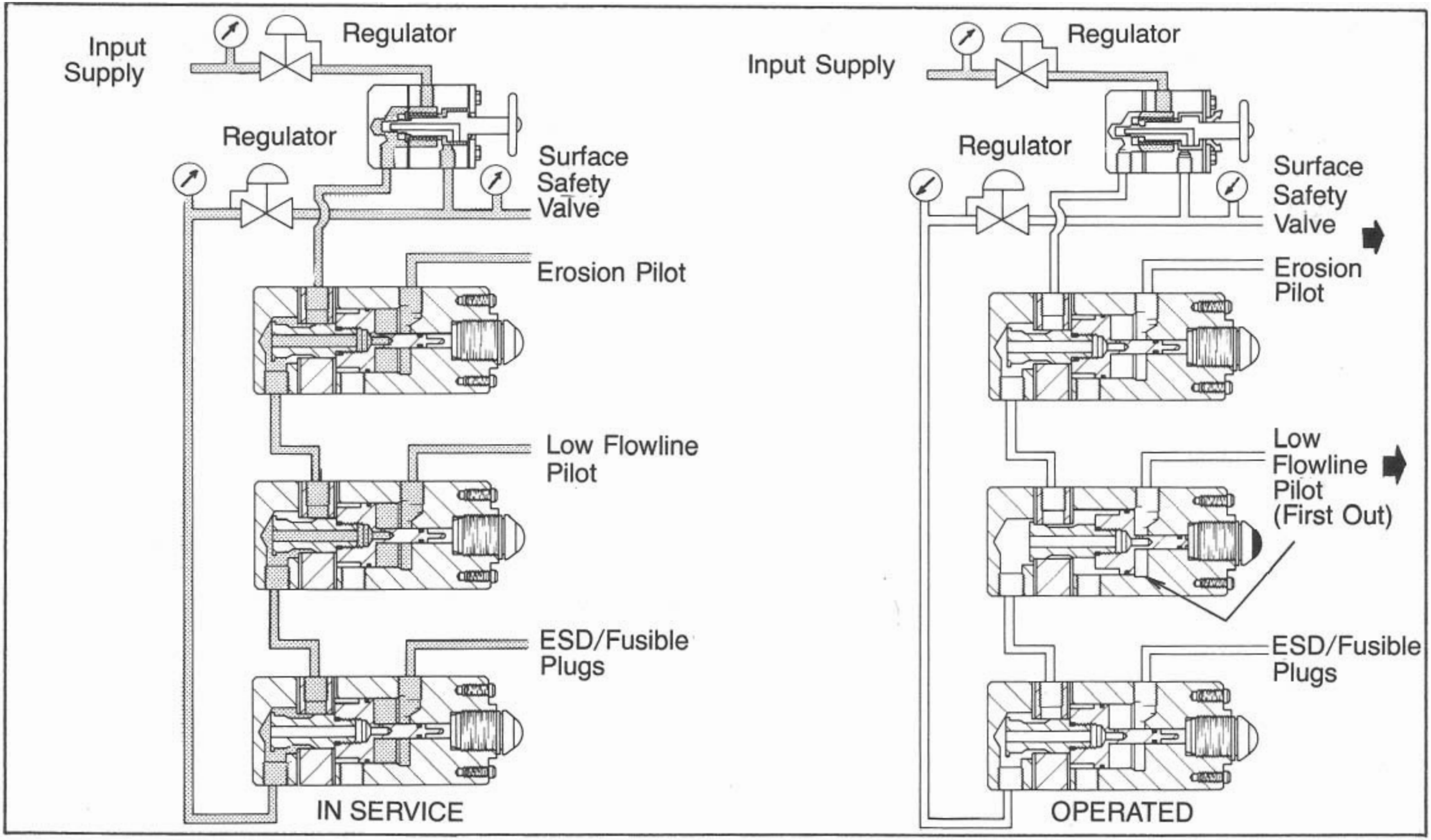

Fig. 10.24 *First-out indicator relay valve*

friction puts the exhausting pressure on the larger area of the piston, giving it some snap action.

The inlet of the earliest indicator to actuate blocks and bleeds the system pressure from the other indicators. Pilot line pressure insures stability in the other indicators while the system is bleeding down. The outlet of the last indicator relay in the circuit series should be connected to the pilot line of the pneumatic relay valve to the SSV and to the inlet of the first indicator connected to the cylinder port line.

If a two-pressure system is used, the reduced pressure is regulated at the inlet line to the first indicator relay of the series.

11

Other Circuit Components

A safety system is not just safety valves and pilots. Many other components are used for supply, hookup, indication, and isolation. A few of these components are listed here.

Pressure regulators

Supply gas for a pneumatic control system is normally obtained from a higher pressure source and is reduced through a pressure regulator to the desired value for proper operation. The inlet (primary) pressure is throttled to the outlet (secondary) pressure according to the continuously varying requirements of the system.

The restriction changes according to the demand of the circuit downstream. Hence, they are referred to sometimes as "demand regulators".

The working elements of a pressure regulator (Fig. 11.1) consist mainly of a flexible diaphragm which controls a valve through an interconnecting valve pin, and an adjusting spring which is loaded by means of an adjusting screw.

The pressure side of the diaphragm is connected to the outlet port of the regulator so that regulated pressure will be exerted against the diaphragm.

When the adjusting screw is retracted so that no load is applied to the adjusting spring, the regulator valve is closed. As the adjusting screw is turned in, it applies a load to the adjusting spring which is transmitted to the valve through the diaphragm and the valve pin, thus opening the valve.

As the regulated pressure increases, the pressure against the diaphragm increases, thus forcing the diaphragm to compress the adjusting spring until the load exerted by the adjusting spring is equal to the load exerted by the regulated pressure.

If there is no flow demand, this state of equilibrium will occur with

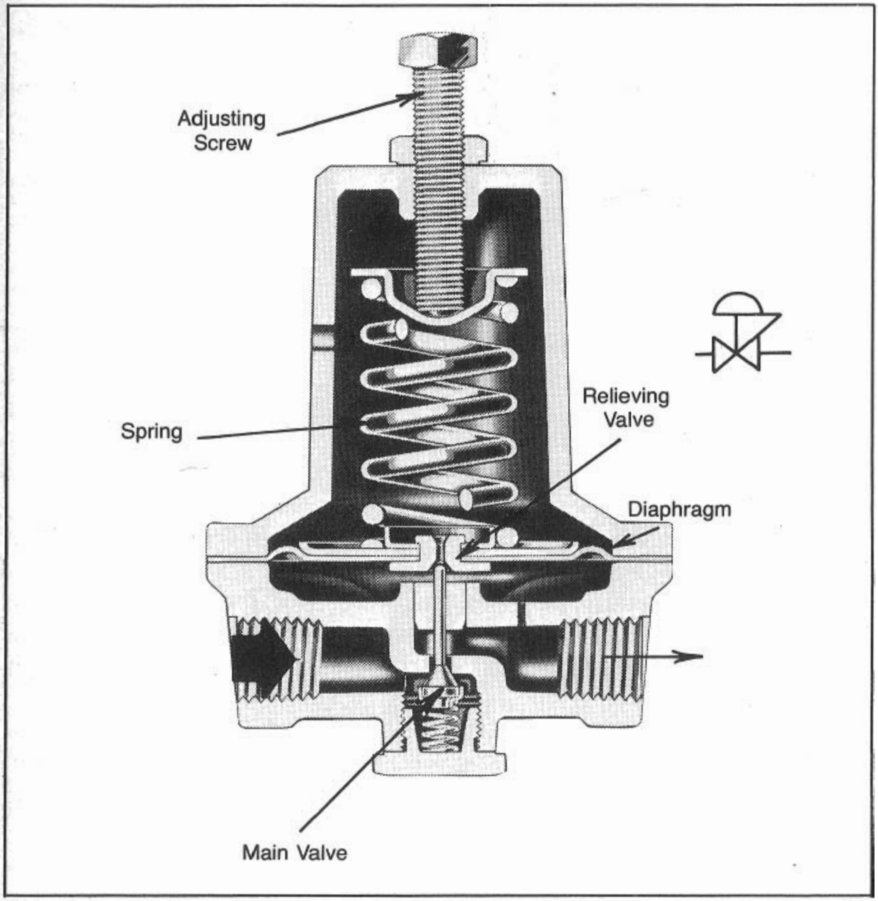

Fig. 11.1 *Pressure regulator. Courtesy of FISHER CONTROLS*

the valve closed. If there is a flow demand, this state of equilibrium will occur with the valve open just the amount necessary to compensate for the demand, thus maintaining the desired regulated pressure.

Since the force across the regulator valve is less when the valve is open than when it is closed, there is some instability in the regulator between open and closed. This instability is evident in the "droop" in pressure downstream before the valve opens and begins filling the system. Poorly designed or misused regulators will also chatter.

The effect can be reduced by having a smaller valve, a valve with a balancing piston, or a double valve that is balanced. Conversely a larger diaphragm has the same effect.

A smaller pressure drop across the regulator valve will reduce the droop. This can be accomplished by using two regulators in series so that most of the pressure drop is taken through the first regulator, and the final reduction (more than the droop of the first regulator) is taken by the second regulator.

Protection from secondary system overpressuring due to a leaky regulator valve can be accomplished by using a relieving regulator. Relieving regulators have a valve on the diaphragm so that excess pressure will lift the diaphragm off the valve pin, after the regulating valve is closed, and bleed-down secondary pressure.

By far the most common are regulators that have output pressures of less than 250 psi and use a diaphragm. Primary, or inlet, pressure ratings are generally a maximum of either 250 psi or 3,000 psi. Regulators are available which have both inlet and outlet pressure ratings of 10,000 psi. These can be used for hydraulic manifolds where it is desirable to have one set of pumps with more than one outlet pressure.

Most, but not all, regulators will permit free flow in the reverse direction, like a check valve.

For standardization purposes, manufacturers make a few sizes and fill in the product line by using undersized port connections. In choosing a regulator be sure to check the flow capacity, especially if it is to supply power to a pump.

Other features that should be considered in choosing a regulator include threaded relief port, panel mount provisions, corrosion resistance, adjustment handle type, and integral filter and/or liquid knockout.

Relief valve

Relief valves (Fig. 11.2) are used to prevent overpressure of a vessel or system. In safety systems they are used on the production system and to protect the control system. As with pressure regulators, port size does not guarantee flow capacity, but it is a general indicator. Not all relief valves have a ported exhaust. If the ported exhaust is not needed the valve may be shorter and less subject to damage.

A relief valve is normally just a poppet valve that is held on seat by a spring. Pilot operated valves are available but they are not used for control circuitry. Generally the pressure difference that the valve will hold is adjustable. Some types are made so that adjusting can be done without removing the valve from the line. These usually have the spring

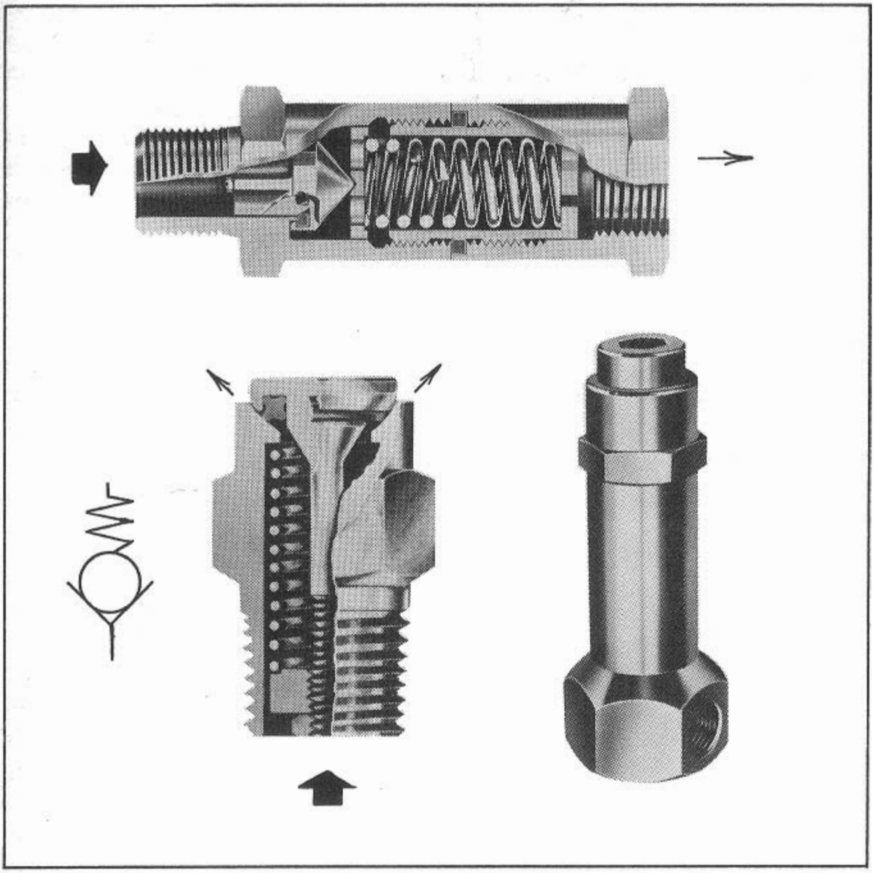

Fig. 11.2 *Relief valves. Courtesy of CIRCLE SEAL CONTROLS*

housing at 90° from the line port. The relief valves that require removal from the line usually have a concentric spring in line with the flow and tend to discourage tampering.

Seals can be metal-to-metal or soft material such as plastic or rubber. Soft materials give greater assurance of no drip sealing; but at high pressures (above about 500 psi), the life of such seals drops off fast. At the higher pressure, it may be better to use lapped metal valve and seat seals.

As the pressure difference nears the setting, the valve seal becomes unstable. It may crack open at the set pressure and then not reseat until the upstream pressure is reduced a considerable amount, sometimes 30%.

At high flow rates on process train vessels, this spread between cracking and reseating is desirable and is built in as a feature; but, on control circuitry, a small spread is best in order to permit operation closer to maximum pressure.

Some units, such as hydraulic control manifolds, are furnished to operate at a relatively high standard pressure. When it is routinely used at a substantially lower pressure it may be advisable to install relief valves with an operating range closer to the operating range of the unit.

Check valve

Check valves (Fig. 11.3) are relief valves with very low cracking pressure. They permit flow in one direction only. Because of the low cracking pressure, the seal problems in check valves are minor.

Orifice check valve

In some cases check valves are made to leak in the reverse direction. The leak may be adjustable or may be a fixed orifice. Orifice checks are used for speed control and timing.

For example, where the safety valve should be opened slowly and closed quickly, or at the entrance to a volume chamber in a time delay circuit, an orifice check will provide two levels of control. Adjustable orifices provide a means for easily tuning the circuit to optimum operation. Tuning is sometimes a necessity, but it is also an opportunity for detuning by untrained personnel. Where the adjustment is critical,

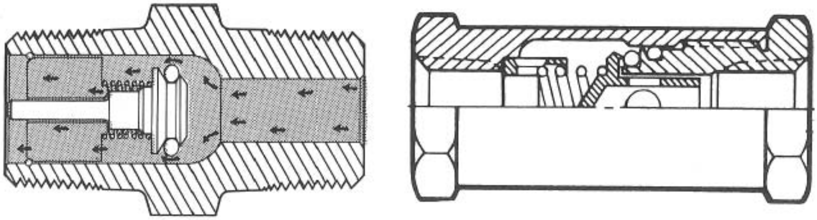

Fig. 11.3 *Check valves. Courtesy of CIRCLE SEAL CONTROLS*

an orifice check valve with a fine adjustment should be chosen. A locking feature also will insure that the adjustment will be stable.

Orifice check valves are, to a limited extent, self cleaning. During operation the pressure is reversed so particles that become lodged in the orifice may be washed out when flow is reversed.

Orifice

Many logic functions in a safety system control circuit are accomplished by pressure drop through a restriction. A vessel will automatically fill to the system pressure and become static until a valve opens to exhaust the pressure.

All flow passages are restrictions, but devices that intentionally present resistance to flow would fall into the general class with orifices.

Orifices can be classed as fixed or variable. Fixed orifices are most commonly a drilled hole in a plate or tube. Commonly a 0.020 or 0.032-in. drill is used to drill the hole for safety systems devices. It should be recognized that the equivalent flow areas of three different holes drilled with the same drill may vary by as much as 50%. Most of the reason is due to burrs and entrance shape variations. The flow coefficient of drilled holes, though highly variable, is still usually accurate enough for general use. Mostly, the holes are drilled in a plate (disc) between the halves of a union (Fig. 11.4). This provides an easy-to-drill piece that is easily cleaned or replaced.

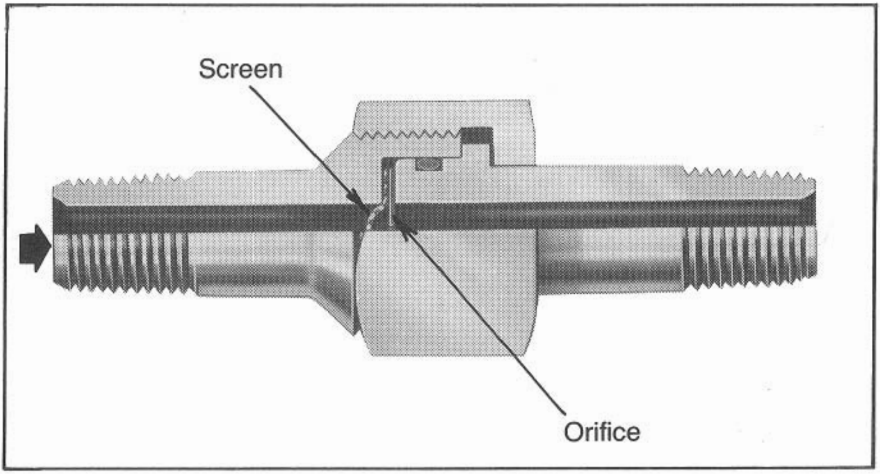

Fig. 11.4 *Orifice union*

Two other types of restrictors are sintered metal sieves and turbulence inducers. Sintered metal "plugs" of predetermined porosity can serve as flow restrictors. Unlike a single hole, no one particle can plug it. But it acts like a filter that can be sealed by a layer of silt that might pass through the single hole. Adjustability is difficult.

The other type is a device that has a flow path shape that causes a lot of turbulence equivalent to a small hole even though the actual flow area may be ten times as large. Price is also large.

Smaller holes have bigger risks of plugging. If the fluid is not already very clean, a screen or filter upstream of the orifice is needed to provide longer times between shutdowns for cleaning.

Adjustable orifices are generally some type of needle valve. Sizing is important to make adjustment a reasonably easy task within the range needed. The maximum equivalent flow area of the valve should be roughly twice the desired maximum so that adjustments can be made in the middle half of the adjustment range.

Indicators

Pressure gauges are the most common type of pressure indicator. Flag type indicators are also available. They are much more effective because they visually alert personnel of system status. The readout is either red or green, white or striped, etc. Such indicators show presence or absence of a signal and replace the function of lights in an electrical circuit.

Pressure gauges can be made more readable for alarm conditions by marking in color the normal operating ranges on the gauge face.

Pressure gauges should be chosen according to these criteria:

1. Cost—Don't pay for quality not needed.

2. Pressure range—The gauge normally should be used in the middle half of its range, but the range should be at least as high as the maximum working pressure of the system. Overpressuring a gauge may ruin it.

3. Accuracy—A gauge that is used as an on-off indicator does not need to be accurate. The cost of accuracy is not just the cost of the gauge. It shows up as panel space for the larger face too. Accuracy is bought with some sacrifice in ruggedness, readability, and availability.

4. Corrosion resistance—Both internal and external corrosion needs to be considered. Media resistance is handled by tube material choice. The case and mechanism need to be weather resistant. Salt air is a fierce enemy of an ordinary steel case, even if the case is coated.

5. Ruggedness—The pulsation from a hydraulic pump can ruin an unprotected gauge in seconds. Protection from pulsation can be provided by a small restriction (snubber) between the pump and the gauge; an accumulator; and/or a liquid filled case. The most common liquid used in gauges is glycerin, but in arctic service glycerin will freeze.

The bubble in liquid filled gages is there for expansion of the liquid due to temperature. It is also a check for liquid content.

Hammering on the piping or dropping hammers on the case are two types of physical abuse that make some form of protection mandatory. Mounting, housing, and construction are three different approaches for protection.

6. Mounting and connections—Some gauges only have provisions for mounting with the connection. If this type is used, bottom or back connection are the usual choices. If the case is provided with a blowout plate, the direction of rupture must be considered. For panel mounting, both front and back mounts are available.

Hand valves

Selections of hand valves are so broad that they cannot be discussed in detail here except to point out that after size and pressure rating, the type of operation is the predominant consideration. What kind of movement or action by personnel will best accomplish the function of the valve? Simple movement with obviously visible position is most desirable if the valve will seal the pressure required in the space available for a reasonable price. All the general requirements for other valves applies to hand valves.

Velocity check valve

In a static control system there is theoretically no flow until a pilot valve actuates. But theory and practice differ by a small amount of leakage. In a practical situation, perfectly sealing valves just don't happen without a lot of care by knowledgable and conscientious personnel.

Trapped pressure systems can be made, but by far the best situation is to have a very large supply system that will maintain system pressure automatically. Direct controlled systems and remote systems using sensed line pressure as the control media need a way to make up for leaks and still shut off input when the monitor-actuator pilots exhaust. Monitor pilots that are located some distance from the sense point need a way to protect against uncontrolled flow in case the small communication line is broken.

In both of these types of situations a velocity check valve (Fig. 11.5) can work well.

Normally a check valve is held on seat by a spring. A velocity check valve has a spring which holds the valve off seat until enough back flow can push the valve on seat. Pressure difference then holds the valve closed and sealed. The flow rate that seats the valve depends on spring force and flow friction around the valve. Normally the setting is about what a person can blow with lung power, and is not adjustable. Because the spring is so weak, the check valve is slightly position sensitive.

To reopen the velocity check valve, the pressure is simply equalized across it with a bypass hand valve. It is important not to defeat the velocity check valve function by leaving the bypass open. As a general procedure it is best never to let go of the handle while the bypass valve is open.

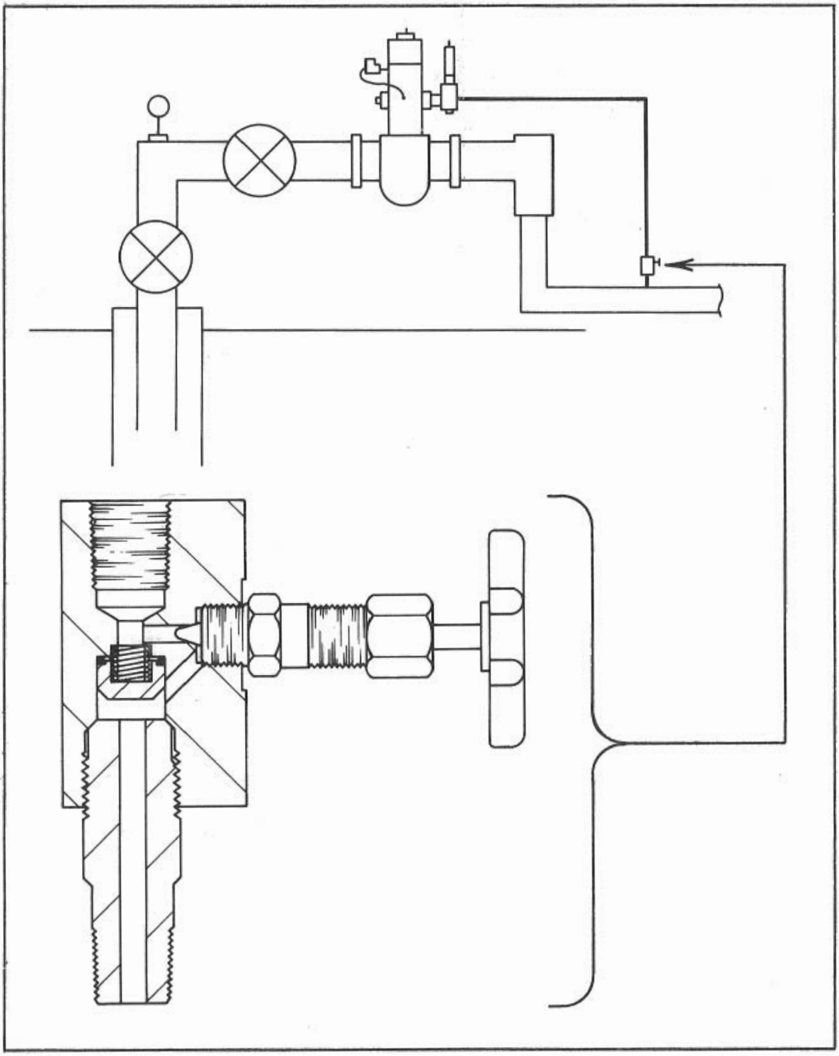

Fig. 11.5 *Velocity check valve*

12

Remote Pilot Circuits

Earlier chapters describe what is to be protected with which type of device. The next step is to learn how the piloting circuits are put together to achieve the logic functions required to relate the sensed condition to shutdown. Not all systems can be described, but the concepts can be extrapolated to almost any situation.

In the following description consider the components in terms of the basic functions they perform.

Monitor pilot—Senses a parameter and bleeds, or blocks and bleeds, signal pressure.

Relay valve—Receives a signal from the monitor pilot and reacts according to its design to control a safety valve or actuator pilot.

Safety valve—Receives a pressure signal and opens or closes on command. In the circuits this may be a safety valve or it may be an actuator pilot which controls a safety valve or group of safety valves.

The function of any pilot is the same; to bleed or block and bleed when the sensed parameter goes out of range. In this chapter "pilot" is considered to be any type of pilot unless otherwise indicated, i.e., pressure, level, temperature, etc.

Basic bleed system

The basic bleed pilot circuit is simply one or more pilots in a parallel circuit with the SSV downstream of an orifice (usually 0.03-in).

When a monitor pilot (Fig. 12.1) actuates, it bleeds with a flow area 4 to 20 times as large as the orifice.

As the gas is exhausted the pressure drops to a value low enough to let the safety valve actuator, or actuator pilot/actuator combination, close the safety valve.

Fig. 12.3 shows a basic circuit. If any pilot bleeds faster than the orifice fills, SSV closes.

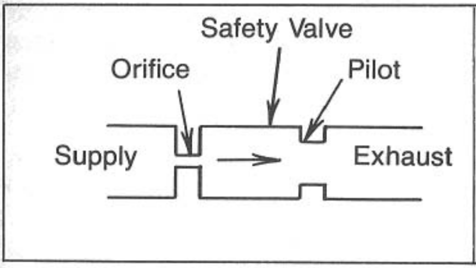

Fig. 12.1 *Flow schematic*

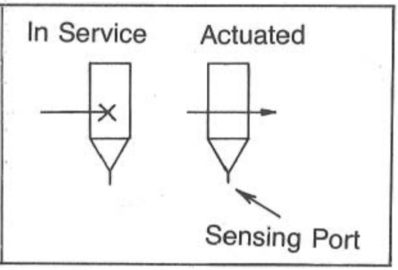

Fig. 12.2 *Bleed type pilot*

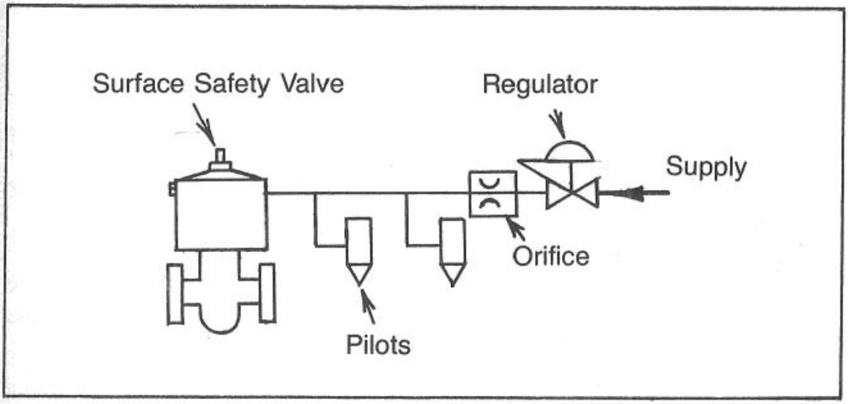

Fig. 12.3 *Basic circuit. If any pilot bleeds faster than the orifice fills, SSV closes.*

The characteristics of this circuit are:

- Simplicity
- Cost—Few components makes cost a minimum.
- Speed—Actuating time for opening and closing is relatively long. A larger volume of gas in the cylinder will make the time longer, as will longer and smaller tubing in the lines.
- Pressure limitation—For flow to occur there must be a continuous pressure gradient. When the circuit tubing is relatively small and long between the pilot and orifice, flow friction may prevent pressure at the actuator piston from getting low enough to actuate.
- Automatic reopen—If the situation that caused the valve to close is remedied and the monitor pilot goes back in service, the orifice will refill the control circuit and the safety valve will reopen. Auto reopen generally is not permitted but is sometimes desirable when the system

is capable of sustaining uncontrolled opening speed (surges) and where reopening is fail-safe. Many high pressure closures such as freezeups are self healing. Most low pressure shut-ins are inherently not able to automatically reopen.

- Continuous bleed
- Single line—Control lines need go only to the monitor pilots. They may be branched for using a minimum length of plumbing.
- Simple pilot
- Single pressure system—Monitor pilots valve the same pressure that the safety valve needs

Basic block and bleed system series

Three-way valves in series perform the same "or" logic as two-way valves in parallel. The control line goes from the supply to the actuator with the monitor pilots in the line. If any one pilot actuates, it blocks the flow from the source and bleeds pressure from the actuator.

A block and bleed pilot is shown in Fig. 12.4.

All the pressure must be bled back through all the pilots between the actuating pilot and the safety valve. Most block and bleed pressure pilots have orifices of 0.06-in. (or less) equivalent diameter.

The features of this circuit (Fig. 12.5) are:

- Non-continuous bleed.
- Bleeds pressure to zero.
- Automatically reopens.
- Minimum deadband limited by pilot, is relatively large.
- Pilot line must go to and from pilot. Simple circuit may be relatively long.
- Single pressure system.
- Speed of actuation slow.

Circuit development

Pilot circuits are rarely most simple and basic. More components usually are added to overcome the defects of the basic circuit or to enlarge the scope of the logic functions. Safety systems can be so complex that they are hard to understand; yet, basically, each portion is simple.

In Fig. 12.4 and 12.5, there are only two pilots controlling one safety valve. The number of sensing pilots doesn't make the basic circuit concept any more complex. The system just becomes more capable of responding to the needs of the production system.

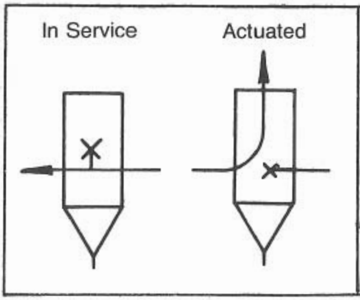

Fig. 12.4 *Block and bleed pilot*

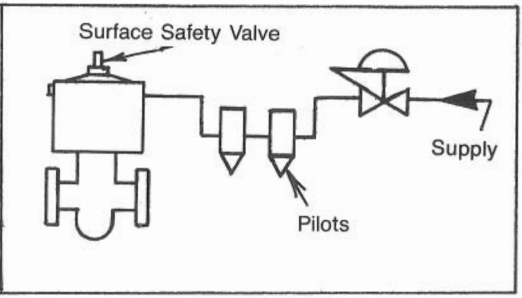

Fig. 12.5 *Basic circuit of block and bleed pilots*

Quick exhaust

One of the weaknesses of the basic system is speed. The simple quick exhaust valve can be used to overcome this one shortcoming (Fig. 12.7). This may be particularly important for conditions like high pressure and liquid level alarms.

The safety valve must be quick enough, for example, to shut off flow before the pressure rises from the high pressure pilot setting to the burst pressure of the vessel being protected. Otherwise there would be no pressure protection.

The quick exhaust valve operates only when flow is reversed. It cannot be used to help a bleed pilot to bleed more quickly, but the volume that the pilot must bleed is reduced to the line volume between the pilot and the quick exhaust valve.The characteristics of continuous bleed and auto-reset are unchanged by the quick exhaust valve.

Relay valve bleed system

Speed, manual reset, low system pressure protection, and noncontinuous bleed are the main benefits of a relay valve. It is placed in the supply line to the safety valve. The monitor pilot line goes from the relay valve in the bleed system to the pilot, or pilots (Fig. 12.8). Pressure to the monitor pilots is furnished through an orifice in the relay.

The monitor pilot therefore controls the same pressure that is required for the safety valve. As with the basic system, any number of monitor pilots can be connected to the pilot line. Relay valves generally have enough flow area that an additional quick exhaust valve is not needed.

But in some cases, distance between relay valve and safety valve is so

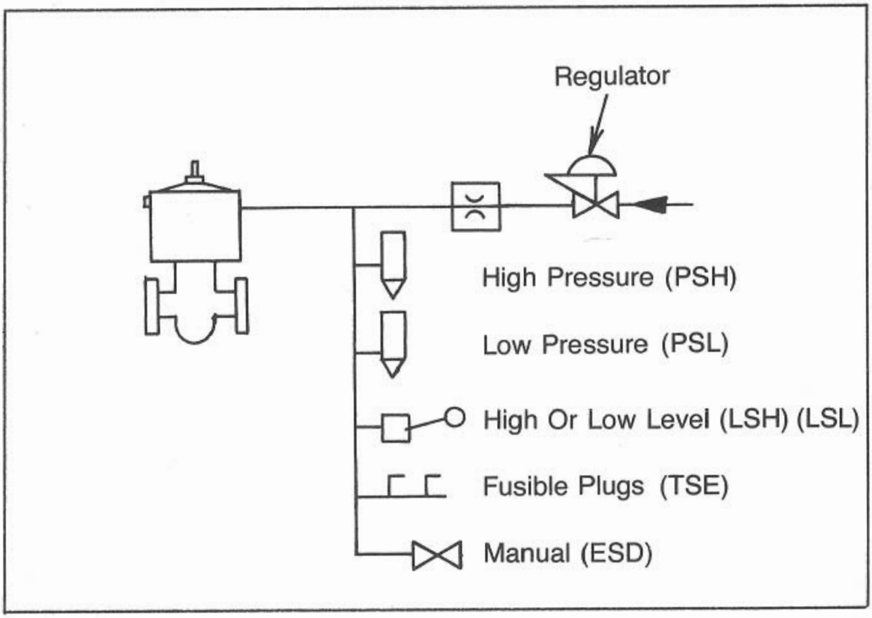

Fig. 12.6 *Multiple parameter sensing*

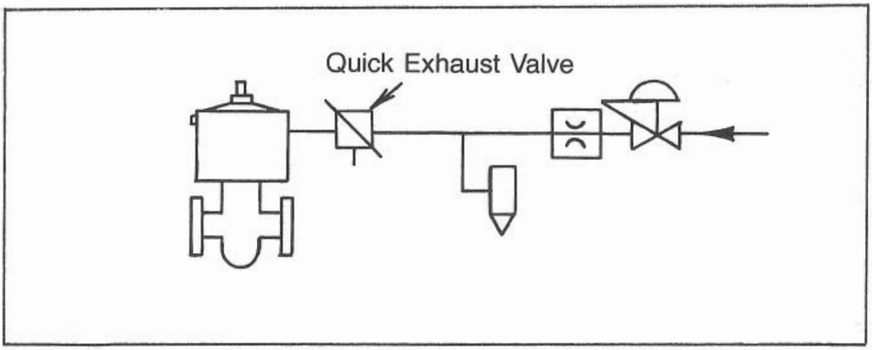

Fig. 12.7 *Faster closure with quick exhaust valve*

great or the displacement of the actuator is so large that a quick exhaust valve is helpful in speeding closure.

A relay valve plus quick exhaust is shown in Fig. 12.9.

Branched system bleed monitors

Multiwell production systems have need for selectively shutting in a single safety valve or a group of valves depending upon which monitor senses an alarm condition.

For example, if a flow line breaks or plugs between the well and header, normally only the single well needs to be shut in. On the other

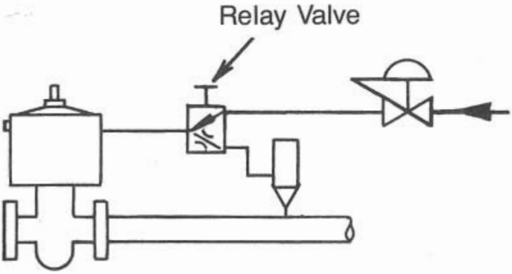

Fig. 12.8 *Bleed pilot system with relay valve*

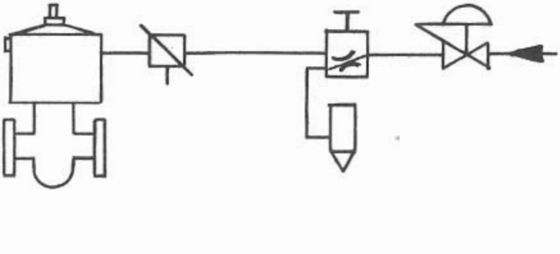

Fig. 12.9 *Relay valve plus quick exhaust*

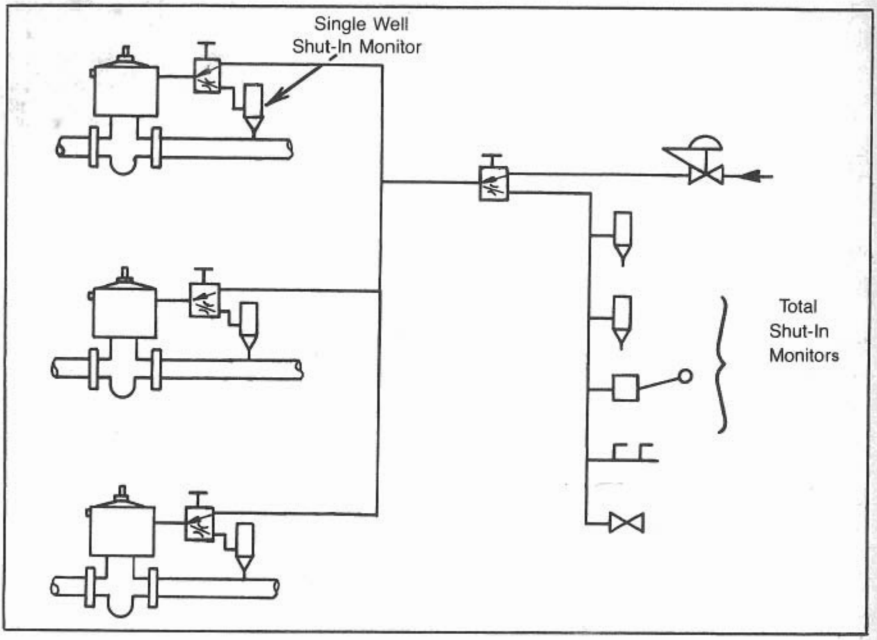

Fig. 12.10 *Single branched system for two hierarchies of control*

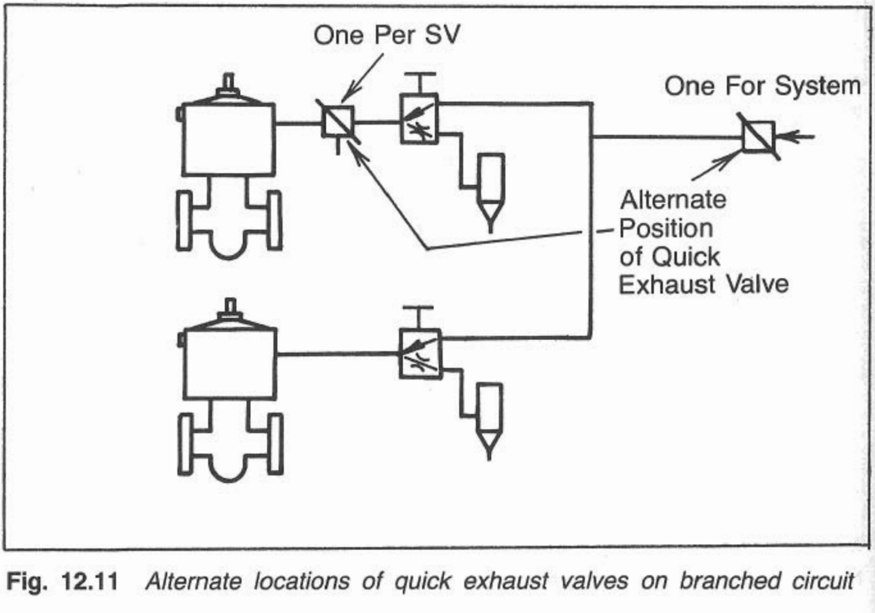

Fig. 12.11 *Alternate locations of quick exhaust valves on branched circuit*

hand, if there is a sales line failure or the ESD system is actuated, all the wells need to be closed.

To accomplish this hierarchy of closure, the supply line to the individual wells comes from a master shutin relay. Thus, when the low pressure monitor pilot on a well's flow line actuates, it shuts only that well.

If a process train monitor pilot or the ESD valve actuates, the master relay blocks supply and bleeds off the entire pilot system for the wells back through the master relay. When pressure at each of the well relays reaches the low pressure set point, the individual relays will actuate and accelerate closure.

Speed of closure can be improved by using quick exhaust valves or check valves (Fig. 12.12) and by keeping system pressure as low as practical. Such complexity normally is warranted only when maximum speed is mandatory. The quick exhaust valve can be placed between the safety valve and the relay valve or between the relays. If it is at the safety valve, only the quick exhaust valve will exhaust the actuator and there must be a quick exhaust valve for each safety valve.

By placing the quick exhaust valves between the relay valves a compromise on speed and complexity can be had by having a quick exhaust valve for a group of safety valves and by using the quick exhaust valve to trigger a group of relay valves. The use of check valves puts all the bleeding function on the relay valve. These three methods accomplish the same thing.

The concept of system branching is not limited to a single branch. System, subsystem, and sub-sub-system separations (Fig. 12.13) are desirable if there is enough difference in the characteristics between the

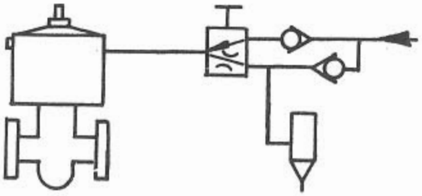

Fig. 12.12 *Quicker closure at the well in a branched circuit with check valves*

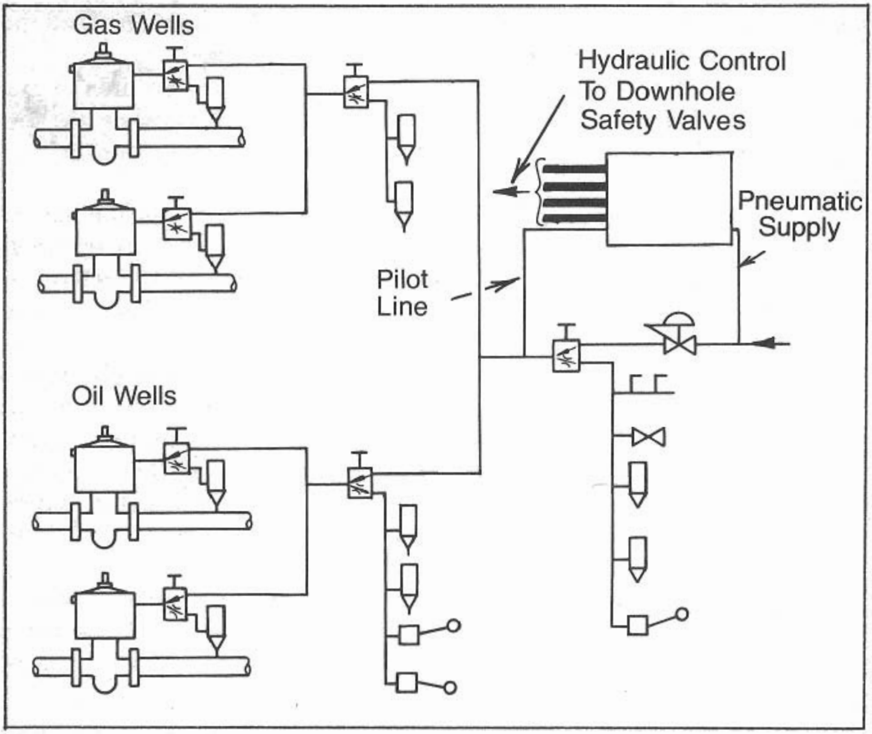

Fig. 12.13 *Multi-branched system*

various process trains and parts of process trains. The question that must be decided is whether the added cost of complexity is worth the added problems.

Another logic function that can be handled by circuit design is, "If branch A actuates then B should, too; but if B actuates, A shouldn't". An example of this might be failure of a level control in a free water knockout separator on production from one zone. Although the wells producing from that zone need to be shut in, other wells not producing much water can continue to produce into the main production separator.

Fig. 12.14 shows two ways to accomplish this cross linking. It would seem that the addition of the check valve would be less advantageous than the series hookup. It must be remembered, however, that the same technique can be used for three or more subsystems where non-identical cross linking cannot be accomplished by the series arrangement of relays.

Branching can be used to sequence start-up, too. This is used most

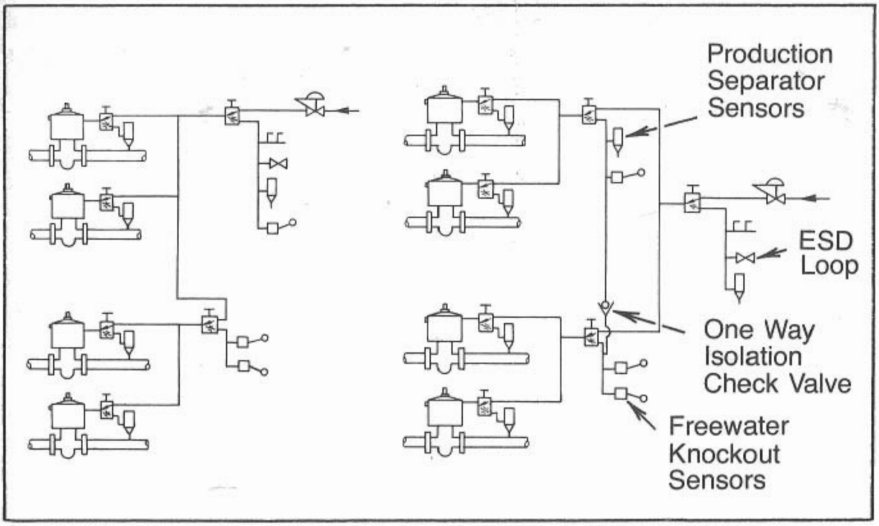

Fig. 12.14 *One-way overriding logic circuits*

commonly when it is required that downhole valves be opened before surface safety valves in order to reduce damage to downhole valves. Another such sequencing interlock requires that fuel gas be on before gas wells can be opened into the heater.

Time delay

Quite often it is desired that surface safety valves be closed before the downhole valves are closed. It is mandatory that the downhole valves close regardless of whether or not the surface valves close. Therefore, positive interlocks cannot be used.

However, time delay circuits (Fig. 12.15) can be used to sequence the circuits. Timing is done by filling or draining a volume through an orifice. By varying the volume or the size of the orifice, time to change pressure in the circuit from one value to another is varied.

Time delay to open or time delay to close is controlled by the direction of the installed check valve. The amount of pressure required to actuate the pneumatic relay will affect the performance of the circuit.

Solenoid valve

Solenoid valves are automatic reset relays. If a safety valve is being controlled by remote means, the consequence of the safety valve opening upon remote command without a person in attendance needs to be evaluated. If someone needs to be present to reset the system, then a three-way solenoid valve should be placed so that pneumatic relay is between the solenoid and the safety valve.

If not, the solenoid valve may be a two-way normally open valve on the pilot line. Or if a three-way solenoid valve is between the pneumatic relay and safety valve, it will not affect the relay unless closure of the safety valve causes the monitor pilot to actuate.

Fig. 12.16 shows a solenoid valve in a pilot circuit. This arrangement is the one to use where the surface safety valve is to be used as a routine production control valve as well, and where the valve is controlled remotely.

Two-pressure systems

Monitor pilot sensitivity and deadband can be improved by reducing the pressure it must control. This will require an extra regulator to reduce the control pressure from that which is required by the actuator to the amount needed to control the relay valve (Fig. 12.17).

Another method is to install the regulator valve in the pilot line from the relay to the pilot. The regulator then functions as a servo valve. This type of system is limited by the differences in pressure and the sizes of the orifice and monitor pilot valve.

If the flow friction is too great at the reduced pressure due to the increased velocity and volume, there may not be enough pressure drop across the orifice in the relay valve to actuate it. By placing the source for the pilot pressure downstream of the two-pressure relay, the system will

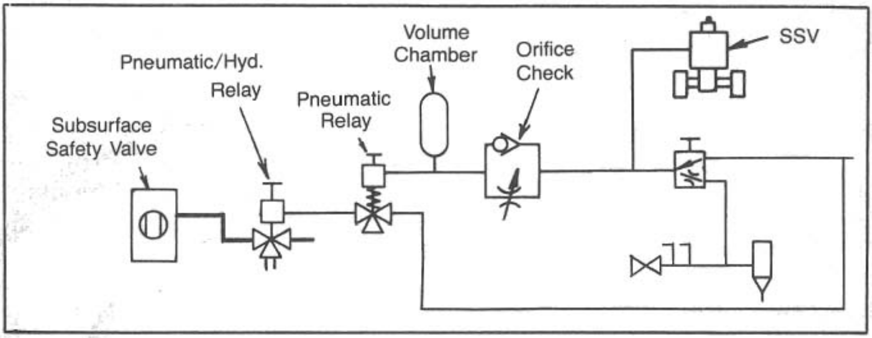

Fig. 12.15 *Time delay circuit to close downhole S.V. last*

not be continuous bleed. Normally these circuits do not require expensive regulators.

Block and bleed pilot circuits

The basic pilot circuit for a three-way pilot valve has the same disadvantages as the two-way valve pilot. Actuation is slow, high pressure hampers monitor pilot operation, and the safety valve follows the pilot. The principle advantage is non-continuous bleed. The addition of a relay valve can overcome most of these disadvantages.

The relay valves can be of the two pressure bleed type or the piston operated spool valve type. Schematics in this chapter show the piston operated spool valve, but either is usable. Piston operated three-way poppet valves are usable, too, but they are not so common.

The basic circuit (Fig. 12.20) for a block and bleed monitor pilot and relay is straight forward. The pilot simply controls the pressure to the piston of the relay which controls the pressure to the safety valve.

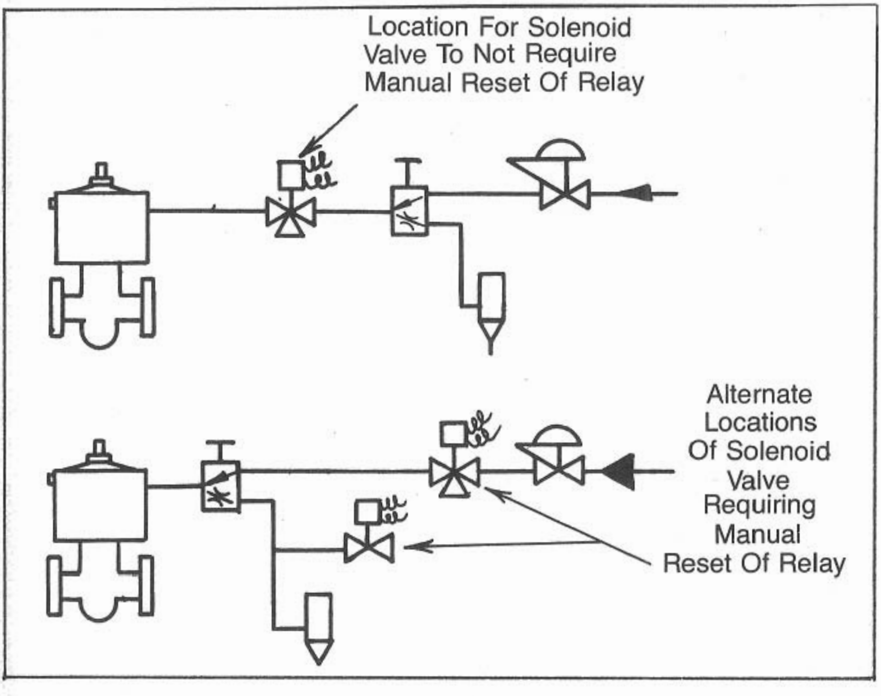

Fig. 12.16 *Solenoid valves in pilot circuit*

Addition of a regulator to the pilot line simply changes it to a two-pressure system.

Three-way branching

Multiple level circuits can develop hierarchy of control in the main supply line, in the pilot line, or both. Master control relays can have control of the subsystems in their entirety, or simply of the pilot lines. Choice of which circuit to use depends to some extent on the length of the various lines in the installation and on the speed of operation. Controlling with the pilot circuit allows bleeding through all the relays. Quick exhaust valves can speed closure, if needed.

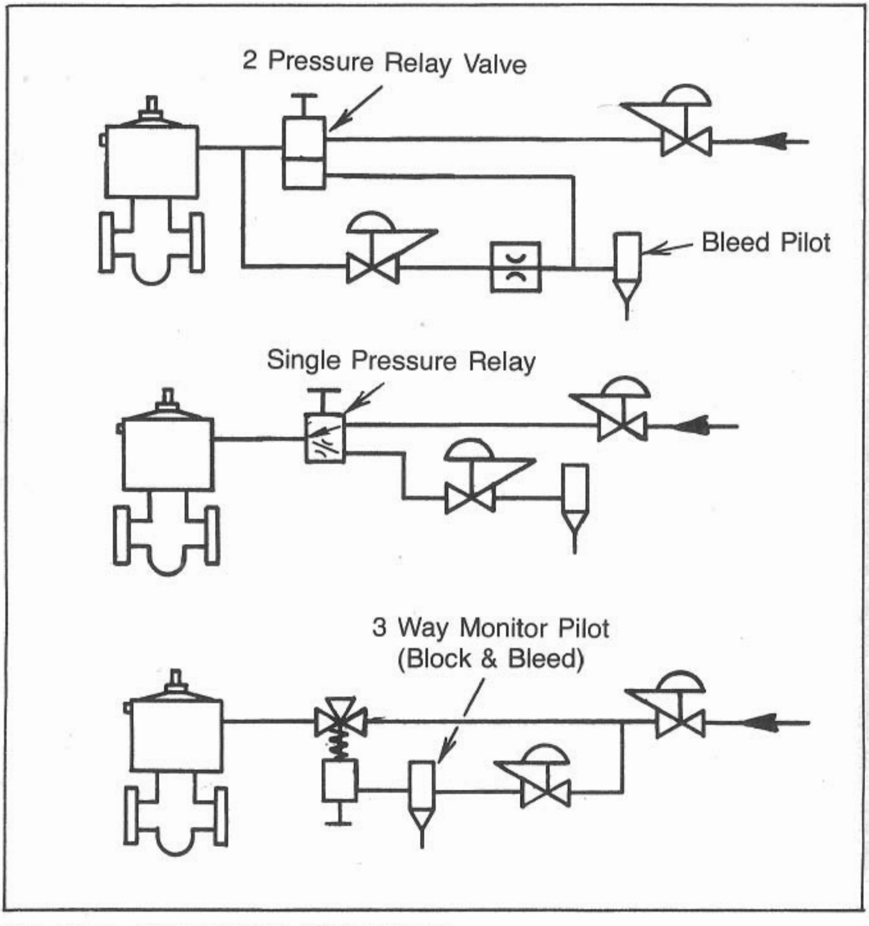

Fig. 12.17 *Two-pressure pilot systems*

Single branched circuits are shown in Fig. 12.21.

Multiple branched circuits follow the same pattern as single branched ones. There is just one more level of control. Symmetry of the circuit is not necessary for operation, as shown in Fig. 12.22, but usually is better for simplicity of understanding.

Solenoid valve

As with all the pilots used with the three-way monitor pilot system, the solenoid valve needs to be the block and bleed type. It can be located

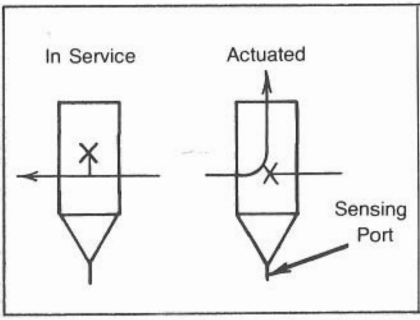

Fig. 12.18 *Block and bleed pilot*

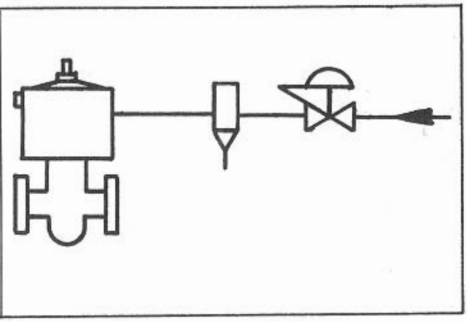

Fig. 12.19 *Basic circuit for block and bleed pilot (3-way)*

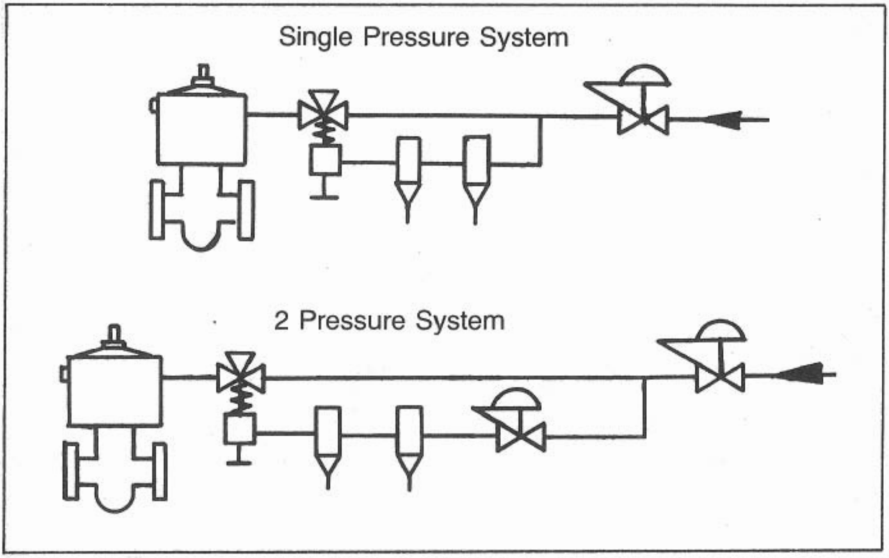

Fig. 12.20 *Block and bleed pilot systems with relay*

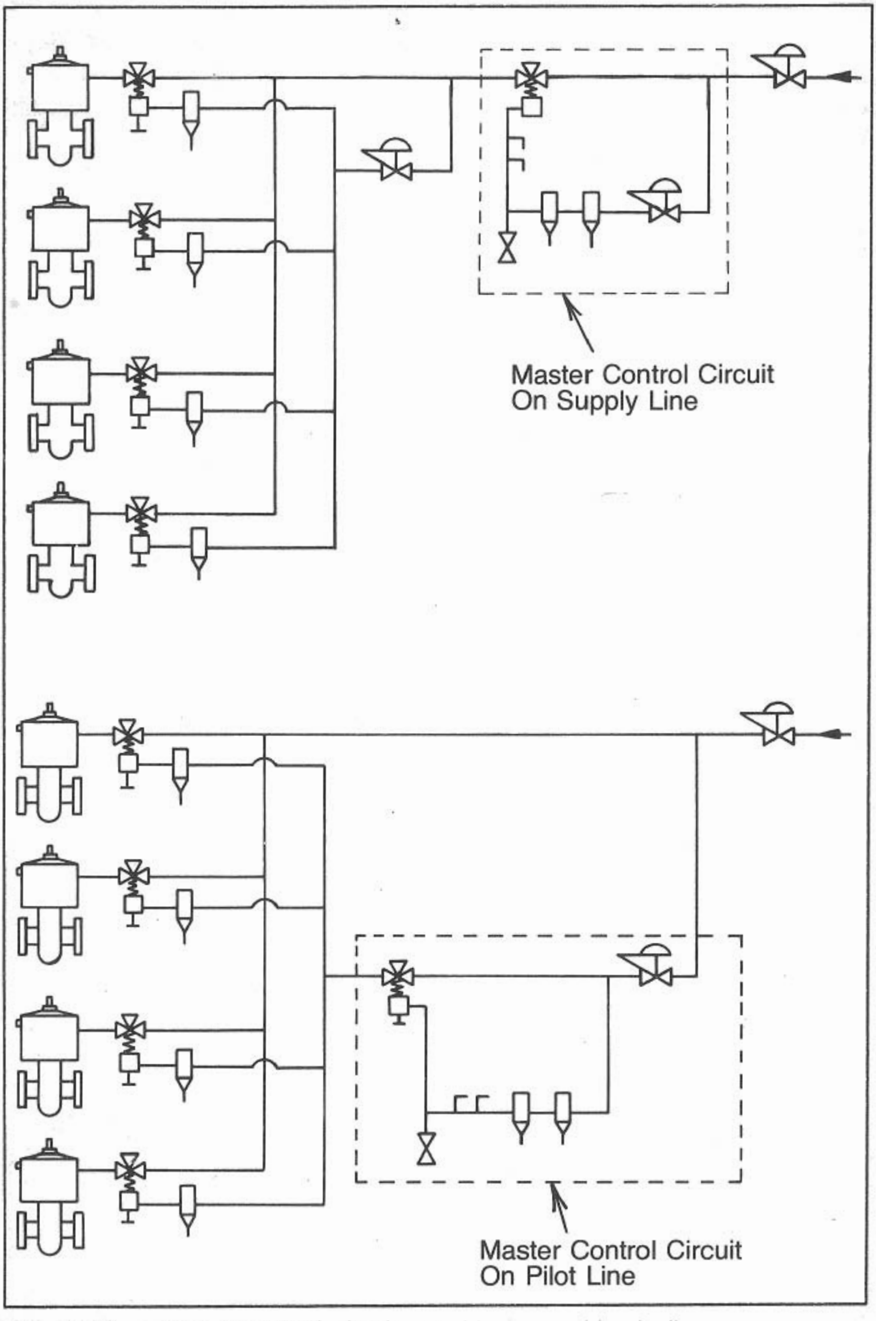

Fig. 12.21 *Single branched circuits for block and bleed pilots*

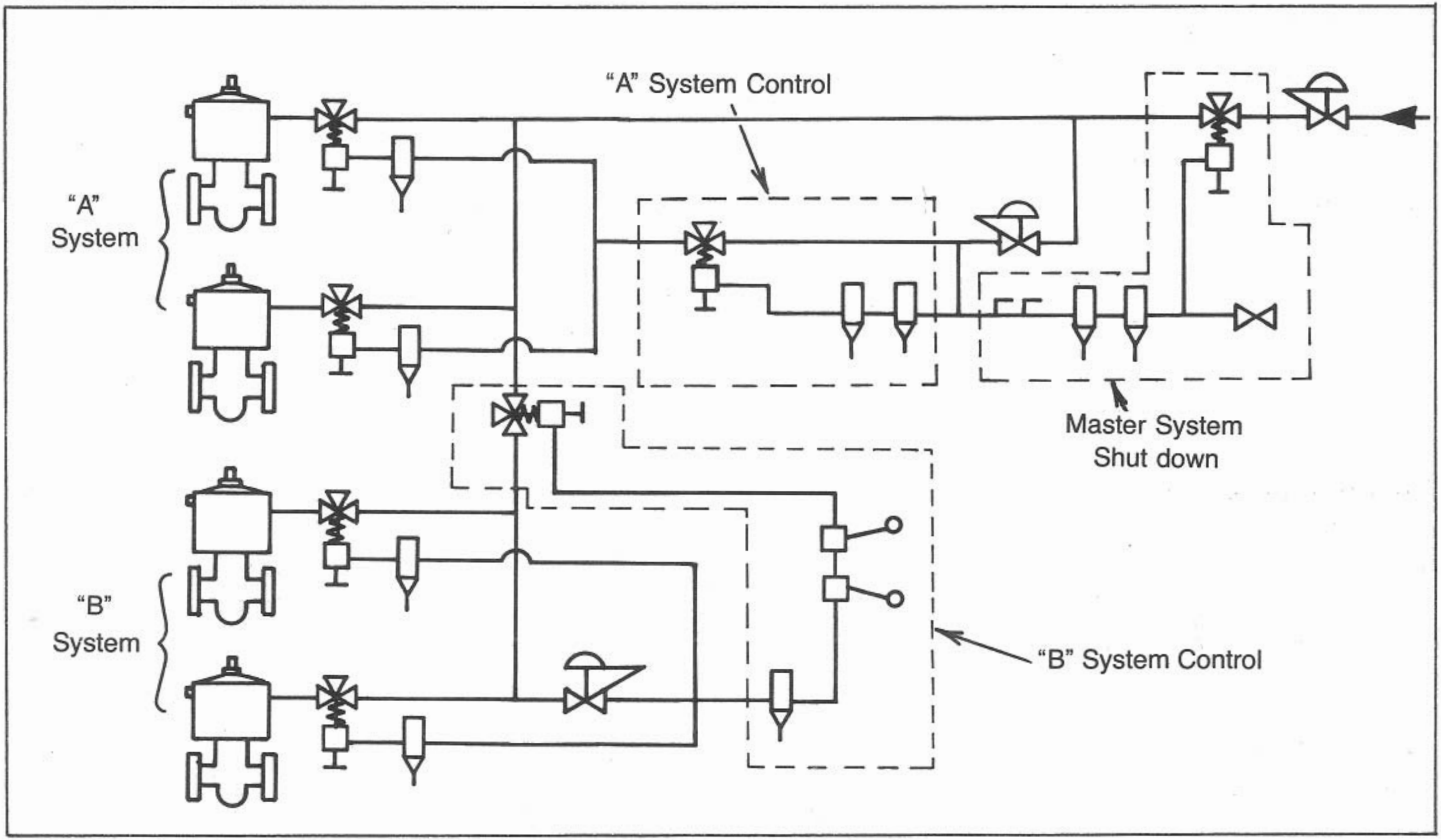

Fig. 12.22 *Multiple branched circuit with three types of control, using 3-way pilots*

either on the pilot line or in the control line to the safety valve in series with the relay valve. By having the solenoid valve in the pilot line the latching feature of the relay can be preserved. Otherwise, the safety valve will obey the solenoid valve as long as the other monitor pilots do not actuate.

If the relay valve has a mechanical latch that can be locked in the unlatched condition, the larger flow area of the relay can be used in preference to having the solenoid valve in series. Solenoid valves normally do not have very large orifices.

A solenoid valve circuit is shown in Fig. 12.23.

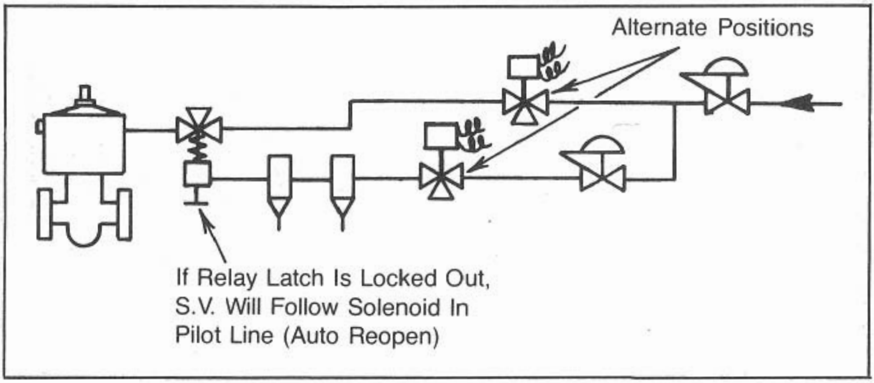

Fig. 12.23 *Solenoid valve circuit*

Quick exhaust

Faster closure techniques for block and bleed circuits are the same as for bleed circuits. It is most effective to use quick exhaust valves and keep system pressure as low as practical.

Remote reset

On occasion it is desirable to have a way to reopen a safety valve remotely with a pneumatic pressure signal (Fig. 12.24). This may be done with a shuttle valve between the last monitor pilot and the relay valve. Thus, when the pilot is in the bleeding condition, pressure from the remote line will shift the shuttle to block exhaust through the pilot and admit pressure to the safety valve.

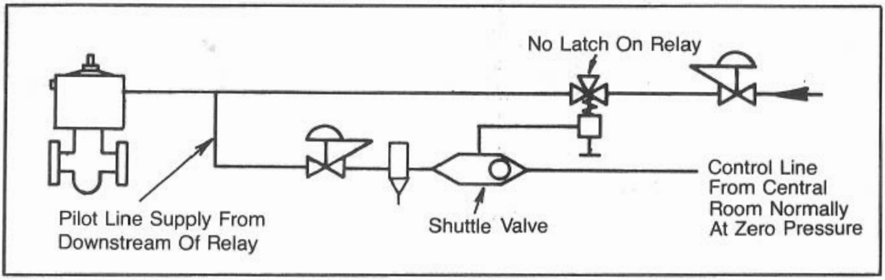

Fig. 12.24 *Remote reset circuit*

Normally the remote line is open so that pilot pressure is admitted to the safety valve. Pilot pressure must be obtained from between the relay and the safety valve, and the latch must be locked out to prevent automatic reopening.

13

Hydraulic Control Units

Surface controlled subsurface safety valves and low ratio surface safety valves need a relatively high pressure control signal to open and stay open. Normally this pressure is applied with a hydraulic control manifold. Manifolds are skid units which have pumps, a reservoir, control valving, and indicators packaged in a preplumbed system that will supply pressure to a control valve.

The control valve is commanded by external monitor pilots to apply or release pressure to the safety valve. These normally static systems differ from power hydraulic systems. Normally very little power is consumed.

The basic system (Fig. 13.1) is a closed system in which the same hydraulic fluid, usually oil or soluble oil in water, is used over and over. It goes from the reservoir to the pump, to the control valve, to the safety valve, and back to the reservoir.

The control valve must either block-exhaust-to-reservoir/admit-pump-pressure-to-SV; or block-pump/bleed-SV-to-tank. These functions can be accomplished with a three-way valve on the hydraulic line, or with two two-way valves, one on the hydraulic line (bleed-to-tank) and one on the pump power supply line. The valve on the supply line "blocks" pressure by stopping the pump.

The two-valve type of system has the advantage of simpler valving. A piston operated two-way normally open pneumatic/hydraulic relay valve is simpler to make than is a three-way valve. Also, it is more reliable above 10,000 psi and is less expensive in larger sizes. The block valve for the pump also can be the pneumatic relay for the pilot system.

The disadvantage of this type of system is that it is applicable to only one output. One pump set can have only one hydraulic line out. This one line may go to several safety valves, but all must be operated simultaneously.

If the valves must be controlled individually, there must be a pump set for each valve or there must be a three-way hydraulic control valve for each safety valve. Most systems use three-way control valves.

As with all good system designs, component selection should be

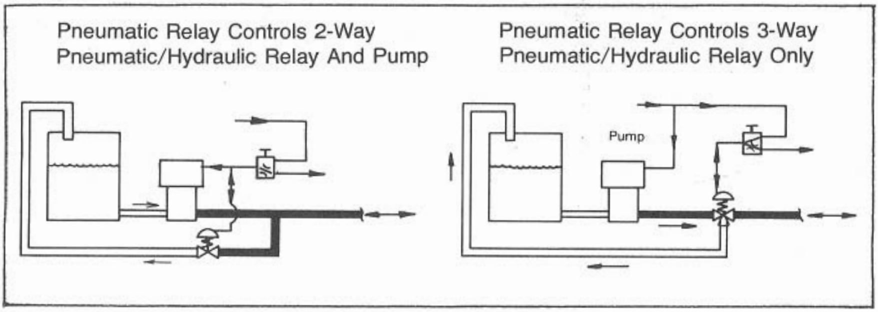

Pneumatic Relay Controls 2-Way Pneumatic/Hydraulic Relay And Pump

Pneumatic Relay Controls 3-Way Pneumatic/Hydraulic Relay Only

Fig. 13.1 *Basic circuits for hydraulic control units*

made with all the characteristics in mind. Each specific design for a given type of component, a pump for example, has some features that make it more or less useful for the application. Following is a discussion of some major components.

Pump

Most hydraulic control units are powered by gas—either compressed air or natural gas from the process train—because of its advantages in piloting and pump operation. The most common type of pump used is the ratio piston reciprocating pump (Fig. 13.2). The main advantage of this type of pump are ease of pressure adjustment and inherent pressure maintenance characteristics.

Hydraulic output pressure is determined by the ratio of the areas of the pneumatic piston and hydraulic plunger and by the pneumatic power pressure. For example, a 60:1 ratio pump with 100-psi input pressure will stall at 6,000 psi. At 50-psi input the pump will stall at $60 \times 50 = 3{,}000$ psi, and continuously will try to maintain that stall pressure. Thus, if there is any leakage, the plunger will continuously move to maintain the pressure.

Frequency of stroking is an audible indication of how much leakage there is in the system. Reservoir level tells whether it is internal or external.

Ratio selection is not controlled entirely by the pressure output. Volume rate is to be considered, too. One must decide in the unit design how many safety valves are to be opened, and how fast.

Power, pressure, ratio, and volume relationships of the ratio piston pump are shown in Fig. 13.3.

The pneumatic end of any particular pump can handle a certain amount of power. The output power can be high-volume-rate/low-pressure; or high-pressure/low-volume-rate. Within the common sizes and ratios of pumps the optimum should be chosen.

Another consideration is to be sure that pneumatic pressure input to the pump is not so low that the switching valves become unstable in their operation.

Unstable operation is one of the greatest problems in using a reciprocating pump in a hydraulic control unit. Several pumps on the market are excellent for use in a shop application where they are

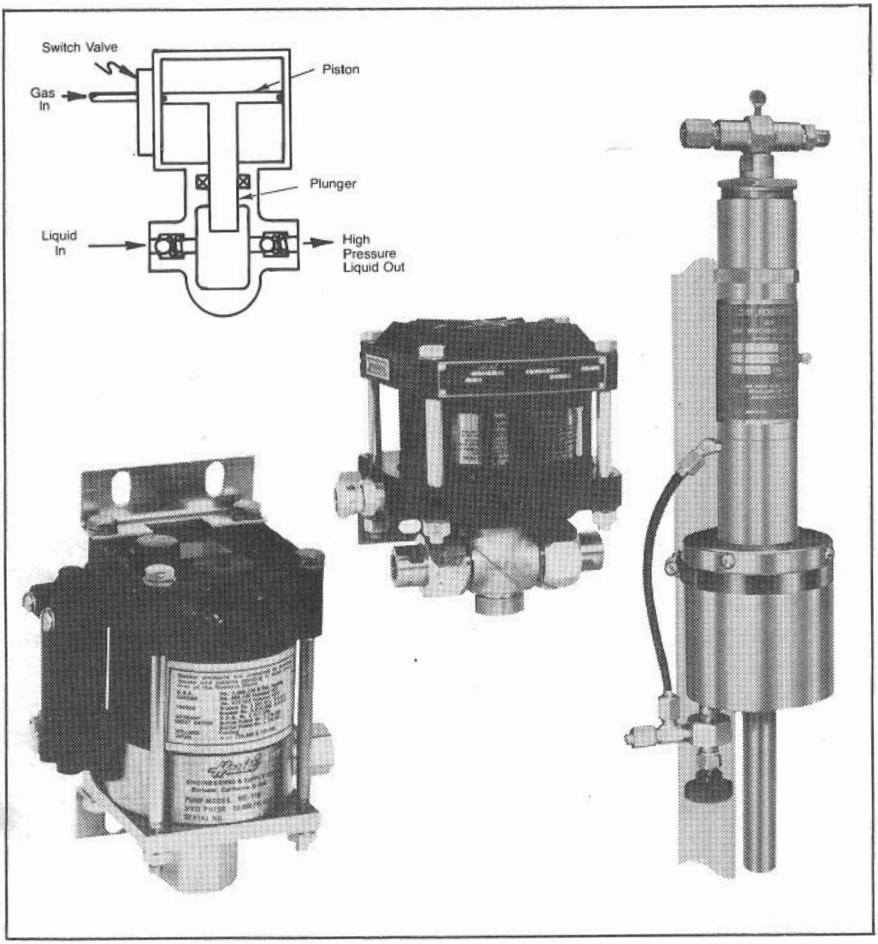

Fig. 13.2 *Ratio piston pumps. Courtesy of STONE BOR®, INC., HASKEL ENG. & SUPPLY*

pumping relatively large volumes; but when used in an application where they are stalled most of the time, the switching valve may hang and the pump may not reciprocate. Gas bleeding and hydraulic pressure drop results. Since the system is stalled most of the time, switch valving needs to seal bubble tight. Labyrinth seals leak and are wasteful.

Most installations must be corrosion resistant. Part of the problem is the corrosiveness of the power gas, and part is the severity of the salt air environment offshore.

Where there is little or no power gas, or in arctic service where freezing is a serious problem, electric pumps are better than gas pumps. Low temperature itself is not inherently a severe environment for an electric pump; but, if it is to be used for cold service, a pump should be pretested in the cold.

Electric pumps are controlled by a pressure switch that turns the pump on when the pressure drops below a preset value, and turns it off when pressure reaches a preset maximum value. The system must operate in the deadband between the two pressures.

To reduce the frequency of pump operation, the deadband range should be increased and the hydraulic system should be made elastic with an accumulator. Most installations need to be explosion proof so equipment must be chosen with this in mind. The most common type of small pump used is a gear pump or axial piston pump. Larger pumps such as those used for annular control line installation are usually piston types.

Pumps should be chosen to be compatible with the fluids being handled. Normally, pneumatically powered pumps are not trimmed for

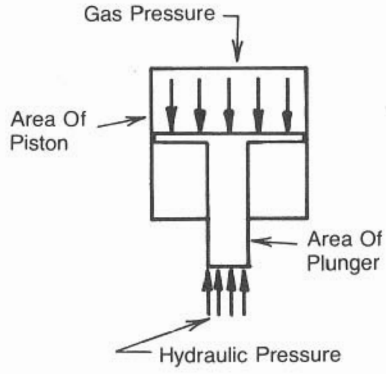

Power In = Gas Pressure X Volume
Power Out ≈ Power In
Power Out = Pressure X Volume
Ratio = Area Piston ÷ Area Plunger
Pressure Out = Pressure in X Ratio

Fig. 13.3 *Power, pressure, ratio, and volume relationships of pumps* gas which contains hydrogen sulfide, nor can the power fluid be a liquid. There is a pump available which can operate under these conditions, but it has some other disadvantages.

Oil is the best hydraulic fluid from the pumps' standpoint, but for fire resistance, viscosity, and cost, the use of other fluids might be better. However, other fluids may not have the lubricity needed for some pumps.

Gear pumps and some piston pumps depend upon the lubricating film of the pumped fluid to prevent rapid failure. The fluid seals sometimes are dependent also on viscosity of the fluid for efficient operation. Elastomer compatibility limits the use of some pump/fluid combinations. Some of the new synthetic, fire resistant hydraulic fluids cause rapid deterioration of commonly used seal materials.

Water, with soluble oil and some other additives, tends to be the most popular fluid.

Control valve

Most control valves are three-way pneumatic/hydraulic relay valves (Fig. 13.4). The valve should be pressure and spring biased to the block-pump/bleed-safety-valve pressure condition. This improves the fail-safe characteristics of the system.

In most cases a manual override is needed to open the valve since the

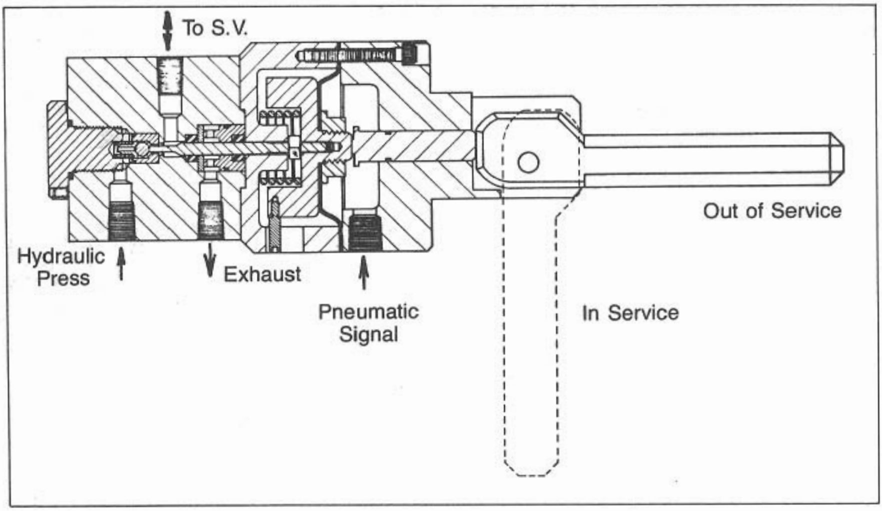

Fig. 13.4 *Pneumatic/hydraulic relay control valve*

pneumatic power supply is downstream of the safety valve. A manual override on the control valve and a hand pump will permit opening one well on a platform from which enough gas can be obtained to power up the system for automatic reopening of the rest of the system. The system then can stay in service. The type of manual override will affect the risk of leaving the safety system locked out of service, and thus not safe. Although a simple screw handle is adequate, it is not very obvious.

A lever or other type of device that will be obvious by its position (a flag), or will prohibit door closure or otherwise interlock a circuit is an improvement. It protects against carelessness. The added feature adds some cost to the component.

Cabinet

Since most hydraulic control units are used offshore, protection against the extremely corrosive nature of salt air environment is needed. Two approaches are to use corrosion resistant materials and/or to use protective coatings. Instrumentation personnel prefer the use of AISI 316 stainless steel because it is the most resistant of commonly used materials.

Arrangement of the indicators and controls on the panel should be easy to understand and operate. They should be clearly identified by placards as to how they work and what they do. Normally the most important controls and indicators are:

Control	**Indicator**
Power gas regulators	Supply pressure
Pilot system regulators	Power gas to pump
Pneumatic relay	Hydraulic pump output pressure
Pneumatic/hydraulic relay	Pilot line pressure
Hand pump	SV line hydraulic pressure

Other isolation, circulation, and switching valve handles may be on the front panel, too, depending upon the complexity of the system and the need for flexibility of operation.

For simplicity of operation it is best to put only those controls and indicators needed for operation on the front panel. Startup and maintenance items are best located for access through a back panel or door.

Compactness, cost, and simplicity usually dictate a single cabinet for all of the safety system controls. Large units and multiwell control units can be made in multiple cabinet units. The most common arrangement is to have the power supply (pneumatic and hydraulic) in one cabinet and the well control units in a separate cabinet, or cabinets. Since each single well control unit is identical to the next, these usually are modularized as a "plug-in" panel to a manifold cabinet.

Weather protection is not of extreme importance since most components in a pneumatic/hydraulic unit are weather resistant. Doors should be wind proof, especially when open. Transparent windows will help status monitoring without having to open the door.

Plumbing

Internal plumbing to most units is with stainless steel tubing and tube fittings. Tubing can be bent easily to fit, and each connection is a union connection. Components such as valves, regulators, gages, check valves, etc., should be chosen with specific requirements in mind as discussed in Chapter 11.

Circuit design

As pointed out, circuitry can be very simple for a small unit that has a single pump and a single control valve. But for a large multi-pump, multi-pressure, multi-well, multi-mode unit with total redundancy, remote control indication, first out indication, low level alarm/shut-in, and audible alarm circuitry is complex. Perhaps the way to understand the more complex unit is to start with the basics and add on features. The major functional components of a basic unit are a tank, pump, control valve, and pneumatic relay (Fig. 13.5).

Several controls need to be added for basic operation:

1. Shut off valve from tank to permit removing pump for maintenance without spilling hydraulic oil.
2. Put strainer on output of tank to keep large pieces of dirt out of pump and control valve.
3. Use regulator on supply to pump, to start pump and adjust pressure output.
4. Use regulator on pilot circuit supply so it won't have to operate at the pump pressure. This improves performance.
5. Place gauge on pilot line to see what pilot status is and to measure pressure output of regulator.
6. Place gauge on safety valve line to monitor status of signal to the safety valve and monitor pressure output of pump.

7. Relief valve should be on output of pump to prevent overpressure of hydraulic circuit by the pump or by temperature expansion.
8. Filter can be on pneumatic supply to reduce fouling.

Fig. 13.6 shows basic controls added to basic circuit.

Reliability of the unit can be improved with the addition of parallel pumps. Parallel pumps also permit pump maintenance without interruption of service. With the pump duplication should come redundant regulators and, perhaps, redundant strainers. This requires:

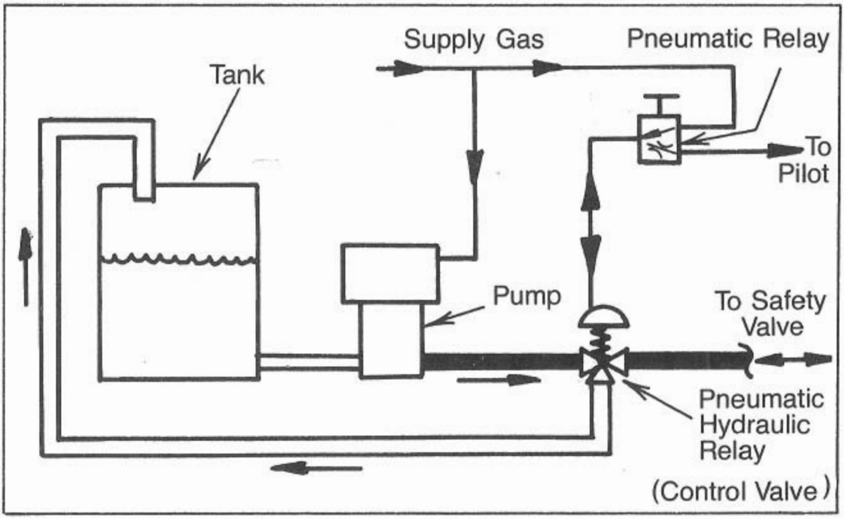

Fig. 13.5 *Basic manifold circuit (functional)*

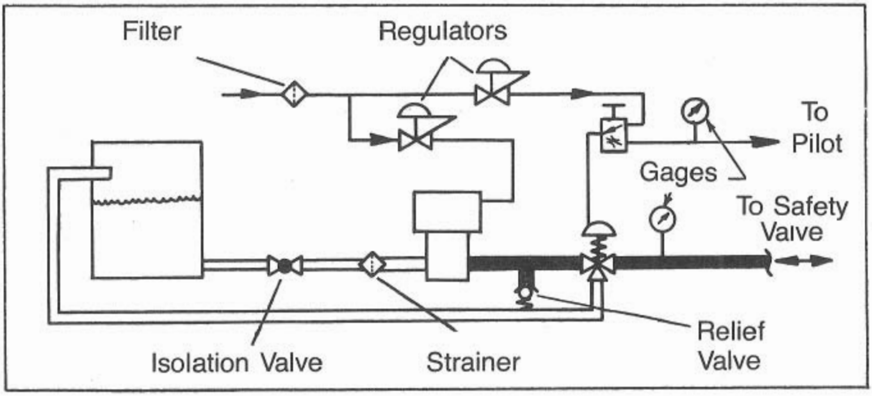

Fig. 13.6 *Basic controls added to basic circuit*

1. Second pump, either a duplicate of the first or one with a different ratio and/or one with manual override. Different ratio permits faster pressuring of the system with final topping by the larger ratio pump. (Fig. 13.7)

2. Regulator for added pump.

3. Isolation valves for regulators for separate maintenance.

4. Check valves on output of each pump. These serve as isolation valves for removing each pump separately for maintenance. A hand valve can be used, but it won't function automatically. The check valve also serves as a redundant output check valve for the pump.

5. Gauges on pump outputs to check pressure setting of each. Different people have different philosophies, some want both set at the same output to share the work load, others want large differences so that the lower pressure pump will operate only during fill up, and if and when the primary pump fails.

From a practical standpoint, the pumps cannot be set at exactly the same pressure, so normally only one will operate to make up for leaks; both will pump during fill-up. It is best to exercise a pump occasionally. They are long service life devices in terms of number of strokes.

The circuits just discussed presume that there is to be one hydraulic output which is controlled by one pilot line. This is a logical place to stop in making a design more complex. Many plan to use the surface

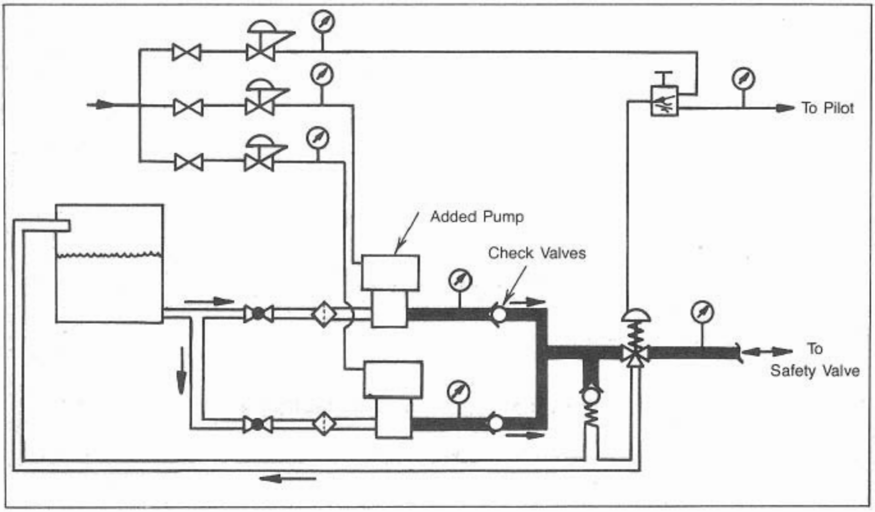

Fig. 13.7 *Redundant pumps for reliability and maintenance with uninterrupted service*

controlled subsurface safety valve (SCSSV) as the principle element of the catastrophe system. It is to be closed only by the ESD system, which is piloted by manual control or fire.

Since the SCSSV requires very little fluid volume for operation, all the safety valves can be operated by a small, simple unit. Where it is desirable to control each well or set of wells individually, there must be a pneumatic relay and control valve for each output so that functions of power and control are separated more distinctly (Fig. 13.8). The added components are:

1. A check valve on return line from control valve—This valve serves as an isolation valve for the return header. A hand valve can be used but is not as safe.
2. Isolation valve on hydraulic pressure header—This is for maintenance of control valve or removal of control unit module.
3. Control valve and gage—Pneumatic relay and gage.
4. Isolation valve for pneumatic relay.

Manual override (Fig. 13.9) on the system for initial start up requires the addition of:

1. Hand pump to develop pressure—The most common are lever operated plunger pumps or manual override on one of the pneumatically driven pumps.

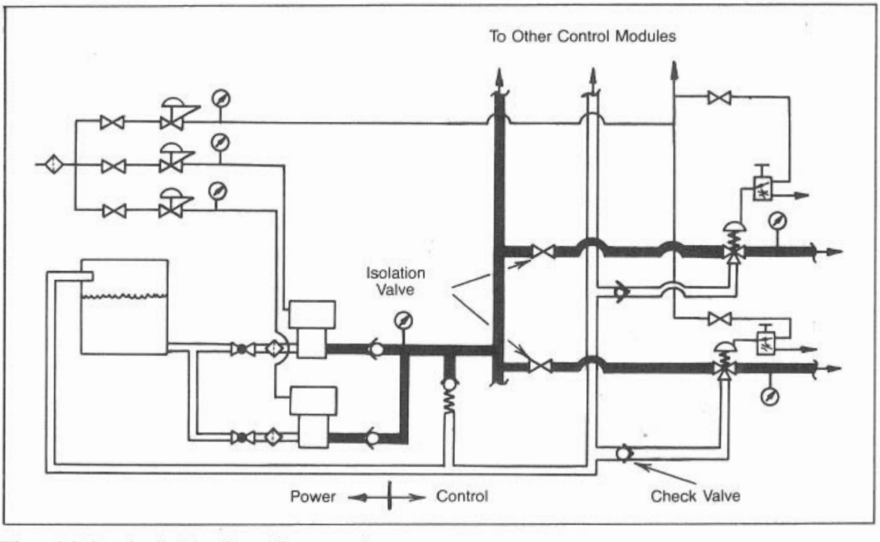

Fig. 13.8 *Individual well control*

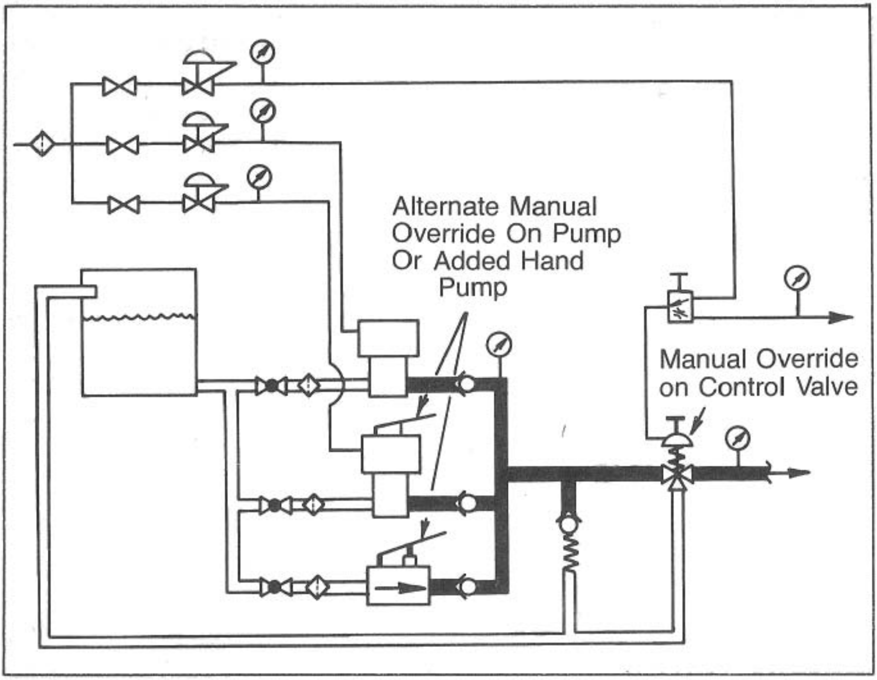

Fig. 13.9 *Manual override for start-up*

2. Isolation check valve for the hand pump.
3. Manual override on control valve.

Many platforms have wells producing from different formations at greatly different pressures. If the SCSSV's in the low pressure wells should not be subjected to the same high pressure required by the ones in the high pressure wells, then the hydraulic control unit must have two hydraulic outlet pressures.

The two most common methods for accomplishing this are to have two sets of pumps (Fig. 13.10) or to reduce the higher pressure down with a pressure regulator. The high costs of these special regulators and the problems with the regulating valve tend to reduce the simplicity advantage of the regulator type two-pressure system.

The circuit shown in Fig. 13.11 is a circuit with a non-relieving regulator. The functions of the relief valve and check valve may be incorporated in the regulator if it is a relieving regulator and if the regulating valve will permit backflow (Fig. 13.12). Both are common

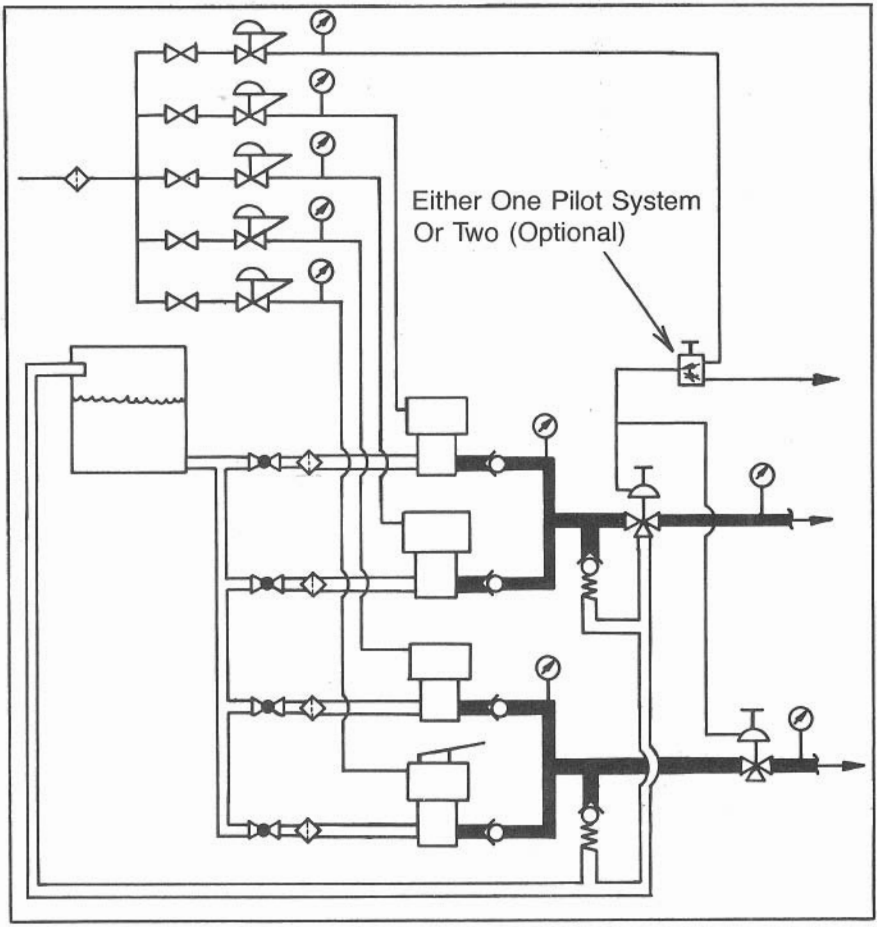

Fig. 13.10 *Two-pressure outlet system with two pump sets*

characteristics of regulators, but the regulator used needs to be checked to assure that it is relieving and will backflow.

If for any reason the hydraulic control pressure decreases to less than enough to hold the safety valve open, the control valve should be actuated to close the safety valve so that it will drift to the partially closed condition. If partially closed, flow erosion will rapidly ruin the safety valve. A low pressure monitor pilot then can be added to the output of the pumps which will control the pneumatic relay to provide the needed protection (Fig. 13.13).

The added components are a low pressure monitor pilot and isolation valves on sensing and signal ports. These valves are optional for maintenance and start up.

Sequencing

Subsurface safety valves are the ultimate protection for a well. They also are expensive to get to and to repair. Many producing companies want to be sure that the surface safety valves close first to reduce wear on the sealing surfaces on the downhole valve. This normally is done with a time delay circuit (Fig. 13.14). These are the additional components:

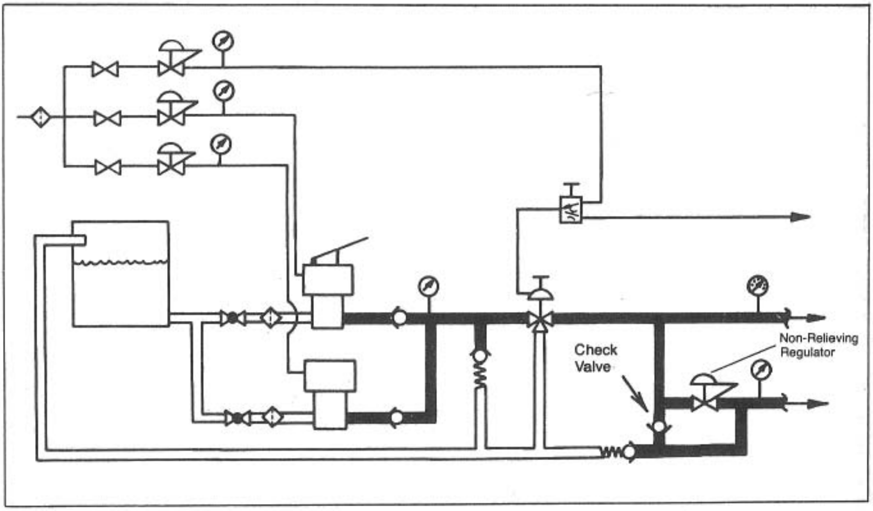

Fig. 13.11 *Two-pressure outlet system with regulated lower pressure*

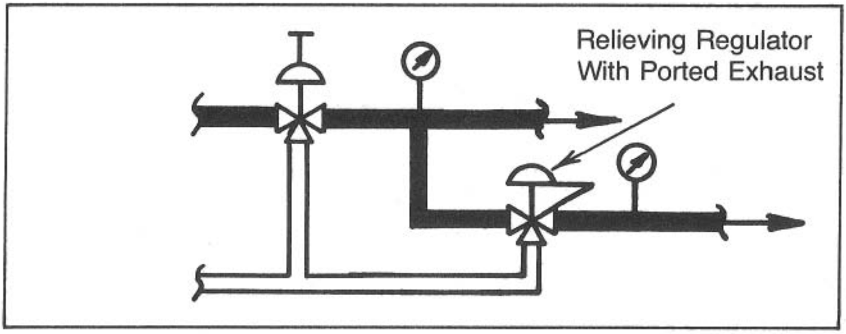

Fig. 13.12 *Regulated control circuit with relieving regulator that will backflow*

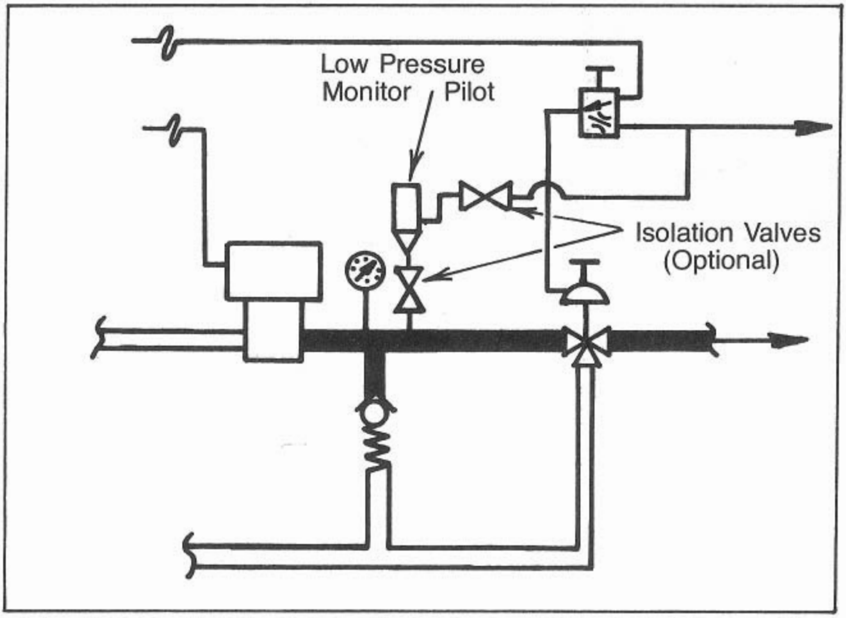

Fig. 13.13 *Low hydraulic pressure protection*

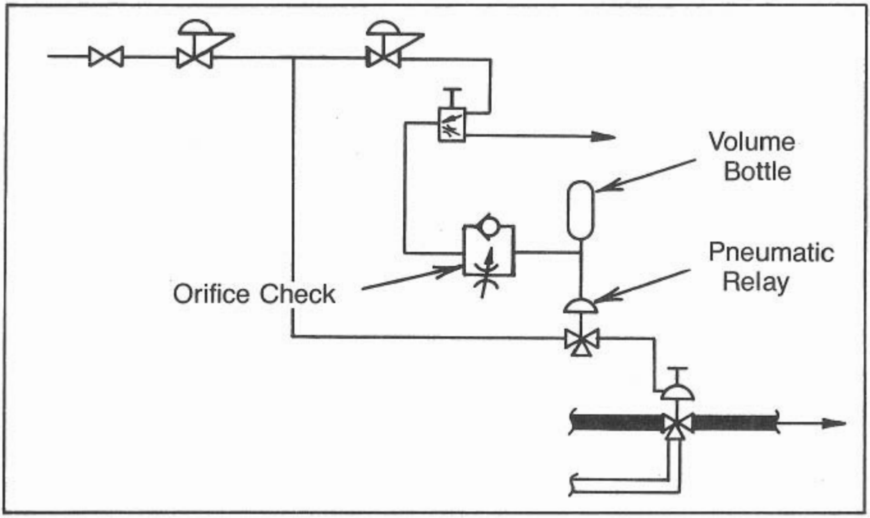

Fig. 13.14 *Time delay circuit*

1. Volume bottle—The timing function is accomplished by filling or draining this bottle of gas pressure from one level to another.

2. Orifice or orifice check—The time to drain the bottle is controlled by the orifice. If time delay is desired only one way then a check valve in parallel with the orifice will speed flow one way and slow it the other. A finely adjustable orifice is most versatile.

3. Relay valve—A three-way pneumatic relay valve controls the pneumatic/hydraulic control valve. Signal pressure required by the relay valve will affect the performance of the circuit.

4. Regulator (optional)—Pressure requirements of the pneumatic relay and pneumatic/hydraulic relay valves may dictate adjustment of the timing circuit pressure.

Sequencing the reopening is another way to reduce safety valve wear. For opening it normally is preferred to open the downhole valve first and the surface safety valve second (Fig. 13.15). This is accomplished by having the control pressure for the surface safety valves come from the subsurface safety valve pneumatic relay.

Consolidating the time delay with sequence opening (Fig. 13.16) makes the downhole valve open first and close last.

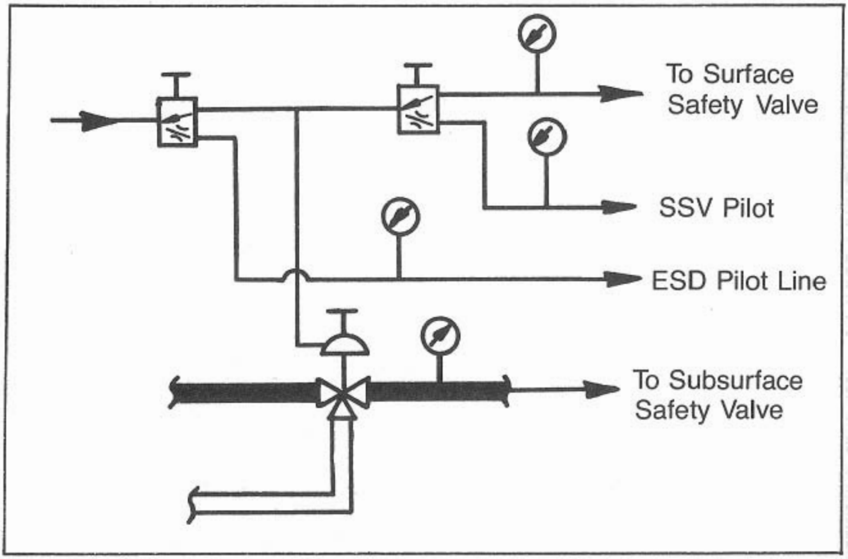

Fig. 13.15 *Sequence circuit to open downhole valve before surface valve*

Surging

Where the well has a hydraulically controlled surface safety valve on the tree plus a surface controlled subsurface safety valve, each will require a control valve if there is to be sequencing.

Without sequencing in the control circuit the surface valve probably will open first and close last, which is reverse of the usual. This is because the downhole valve usually needs as much as 1,000 psi more than shut-in pressure and the surface safety valve needs less than shut-in pressure to begin opening. The pressure then will drop by half until the valve is full open. To keep from surging the downhole valve closed when the surface valve is opened, there should be a check valve on the line to the control valve for the downhole valve (Fig. 13.17). The relief valve must be downstream of the check valve.

Another way to reduce surging is to include an accumulator on the hydraulic pressure header (Fig. 13.18). The accumulator also can permit the use of a smaller set of pumps, and/or it can speed the reopening of the safety valves. Accumulators store energy in compressed gas so there

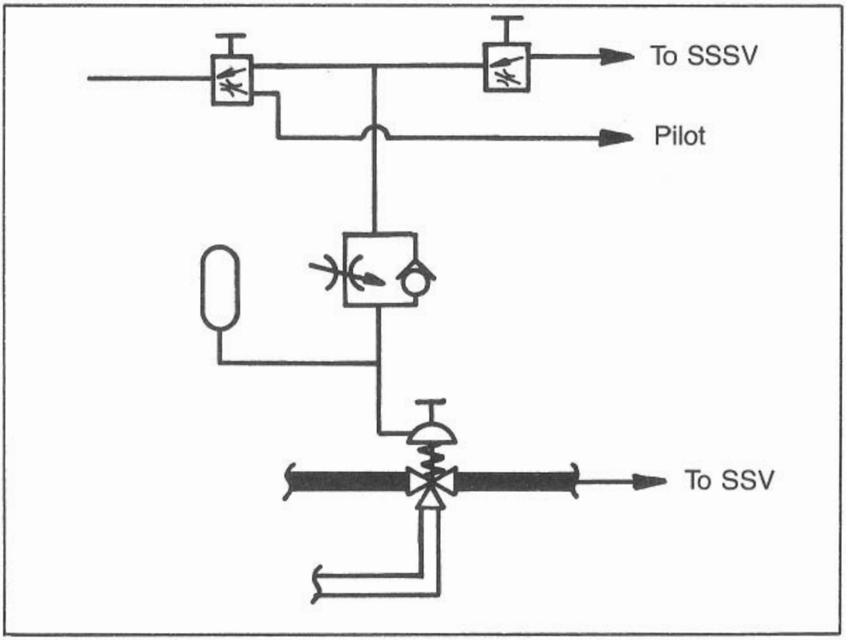

Fig. 13.16 *Time delay plus sequenced opening*

is a difference in pressure from when the accumulator is full of liquid and when it is empty. The accumulator must be sized and precharged to operate within allowable pressure limits.

Reservoirs

Liquid level in the reservoir should be monitored. With all safety valves open the tank should be approximately half full or more. With all the safety valves closed the tank should be full. Don't fill the tank while the safety valves are open or it will overflow when the valves are closed. Some way is needed to monitor the fluid level to insure that it does not allow the pumps to suck air. External leakage from the unit will cause the tank level to lower. The unit should be repaired quickly since internal leakage will cause the pumps to operate continuously.

Small units are checked by opening the filler cap and looking in. Larger units normally will need a sight glass or float gage. Additional protection can be had by having a float level controlled warning horn or shutdown system.

On occasion a downhole safety valve will not be placed properly in the nipple and well fluid will be permitted to flow back. In such cases the

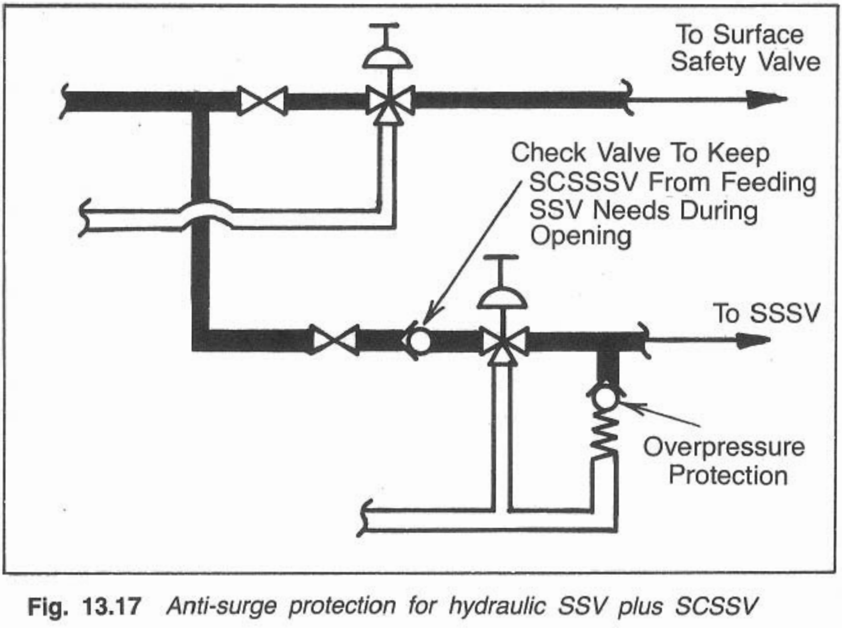

Fig. 13.17 *Anti-surge protection for hydraulic SSV plus SCSSV*

reservoir should be protected from blowing up. Backflow rate control can be helped with a hydraulic isolator as described in Chapter 10.

Overpressure of the tank can be reduced with a properly sized vent and/or relief valve. Internal bracing to strengthen the tank is good insurance, too. Some large installations may require a gas blanket on top of oil to reduce ignition hazard if oil is used.

Fig. 13.19 shows reservoir tank, accessories, and features

To purge the system of air and dirt, it is helpful to have a bypass circuit to allow the hydraulic fluid to be pumped around and through the filters. Fig. 13.20 is a circulating valve for purging

Large complex units require special care to insure against leaving the safety system locked out of service while the well is producing. If the hazard is severe enough, there should be a series of sensors on the doors, level valve, low pressure pilot, manual override, etc. Well sensors should be connected to a master alarm horn or flag.

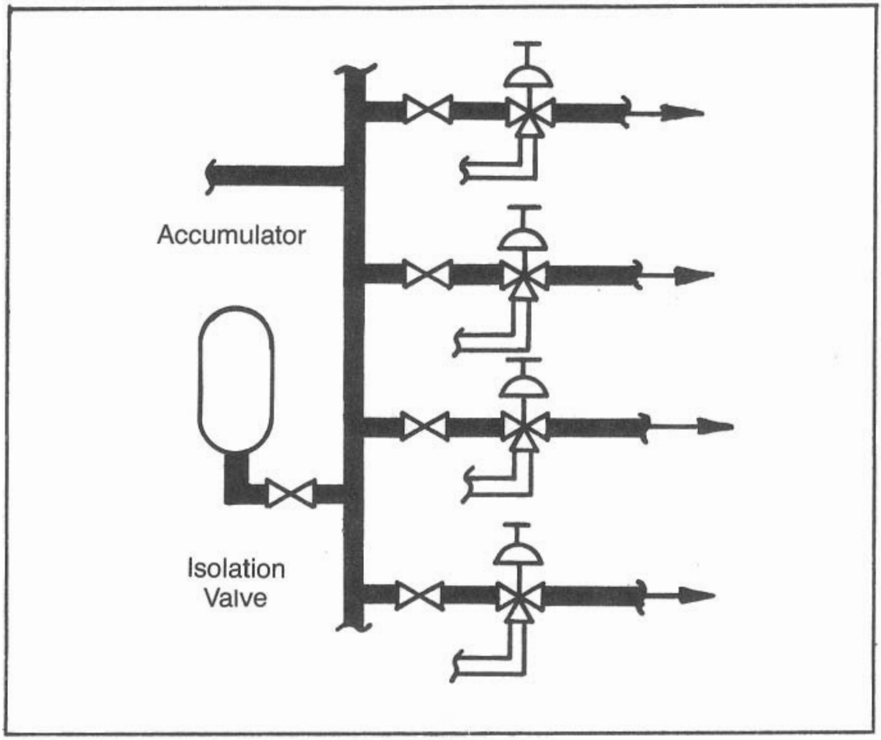

Fig. 13.18 *Accumulator on pressure header to reduce surges and/or to speed opening*

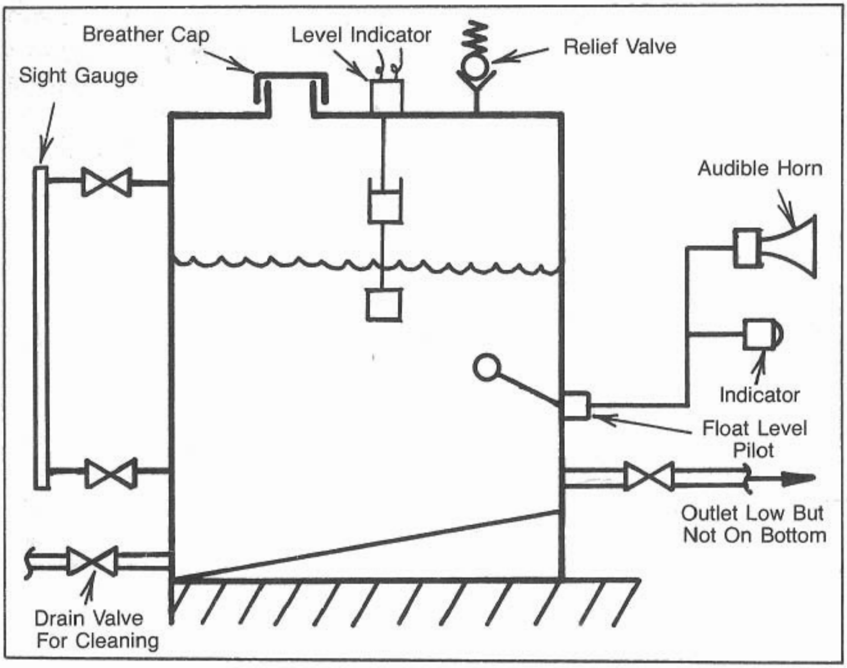

Fig. 13.19 *Reservoir tank accessories and features*

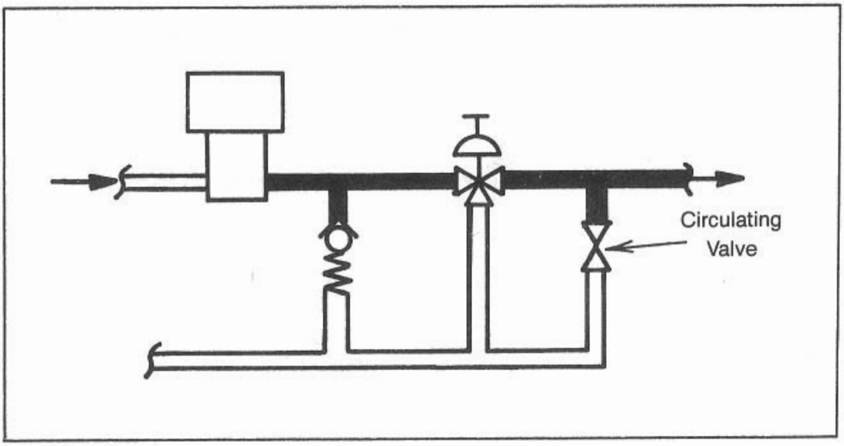

Fig. 13.20 *Circulating valve for purging*

Total system units which combine all the controls and indicators for the entire safety system are the ultimate in systems design. Each is a special design tailored to the needs of the installation. In these units the downhole valve controls, wellhead safety valve controls, process train controls, integration logic controls, status indication equipment, and first out indication equipment are consolidated in one cabinet.

As was pointed out at the beginning of this chapter, control units can be very simple or very complex. The complex units have the same principles of operation, just more operations.

14

Subsurface Safety Valves

What's the need for putting a safety valve downhole? It costs more to buy and maintain. It is usually a restriction in the tubing. And it is a lot of trouble to operate, especially to reopen. All these disadvantages must be paid for with some advantage. Indeed, that advantage is security. When a downhole safety valve is needed, it is really needed!

When a subsurface safety valve is called upon to fullfill its mission, there is usually a hazard to the surface equipment. There is, or there is a threat of, fire, collision, or explosion. During all these catastrophes the subsurface safety valve is snugly protected by the well it is to protect. It can perform its assigned task and relieve the wellhead equipment of its pressure load in case fire or impact renders the surface equipment incapable of holding pressure.

If downhole valves are so great, what is the need for surface safety valves? There is need because of the disadvantages noted at first. The subsurface valve is for catastrophes, the surface valve is for routine alarm conditions that do not threaten the integrity of the wellhead equipment.

Such events usually involve the malfunction of a primary process control device that causes liquid levels and pressures to wander out of tolerance.

There is a variety of equipment types available, and each has its application. The two main types of control are: direct and remote.

Direct control

Direct controlled valves sense the conditions at the valve. When these exceed the preset parameters, the valve closes. The two parameters measured are flow rate and pressure. Both are indicators of excess flow rate due to failure of the Christmas tree. As described in Chapter 5, pressure sensing systems detect equipment failure by measuring pressure differences due to changes in flow rate through the variety of restrictions in the flow stream. Reservoir pressure changes very slowly and atmospheric pressure remains rather constant. In between, the locations of the pressure drop depend upon where and how flow is controlled.

The "excess flow" valve has a restriction built into it. When pressure drop across the valve exceeds a preset value, the valve shuts.

The ambient pressure sensing valve has a charged chamber containing gas at a preset pressure.

Types of subsurface safety valves and completions are shown in Fig. 14.1.

When pressure at the valve drops below this charged pressure, the valve shuts. This type valve depends upon the formation and tubing below the valve. They serve as restrictions so that increased flow rate can be detected as an increase in pressure differential by measuring the downstream pressure.

In either case, several requirements must be satisfied for the valve to operate:

1. The valve must be set correctly.
2. The well must be capable of flowing fast enough to close the valve.
3. The tree damage must be extensive enough to let the well flow fast enough.

Setting the valve correctly is simply a matter of taking the care to obtain the necessary well data and having the computer tell you what bean and spacer combination to use. These settings then should be checked by flow test. Even if the valve is set properly today, it may be incapacitated should the well decline next year. Therefore, it should be checked periodically. OCS Order No. 5 requires certain setting and testing requirements that are good practice for all installations.

Remote control

When the sensing function is removed from the valve and is located on the surface, it becomes capable of shutting the well before serious damage has occurred to the tree, instead of after. Also, several types of danger can be sensed. The problem with remote controlled subsurface safety valves is the complexity of the equipment.

Not only must the safety valve and nipple be more elaborate, but the control manifold and piloting add to the complexity. There is more difficulty in running the tubing, because of the control line, and the control line is a source of problems in operation.

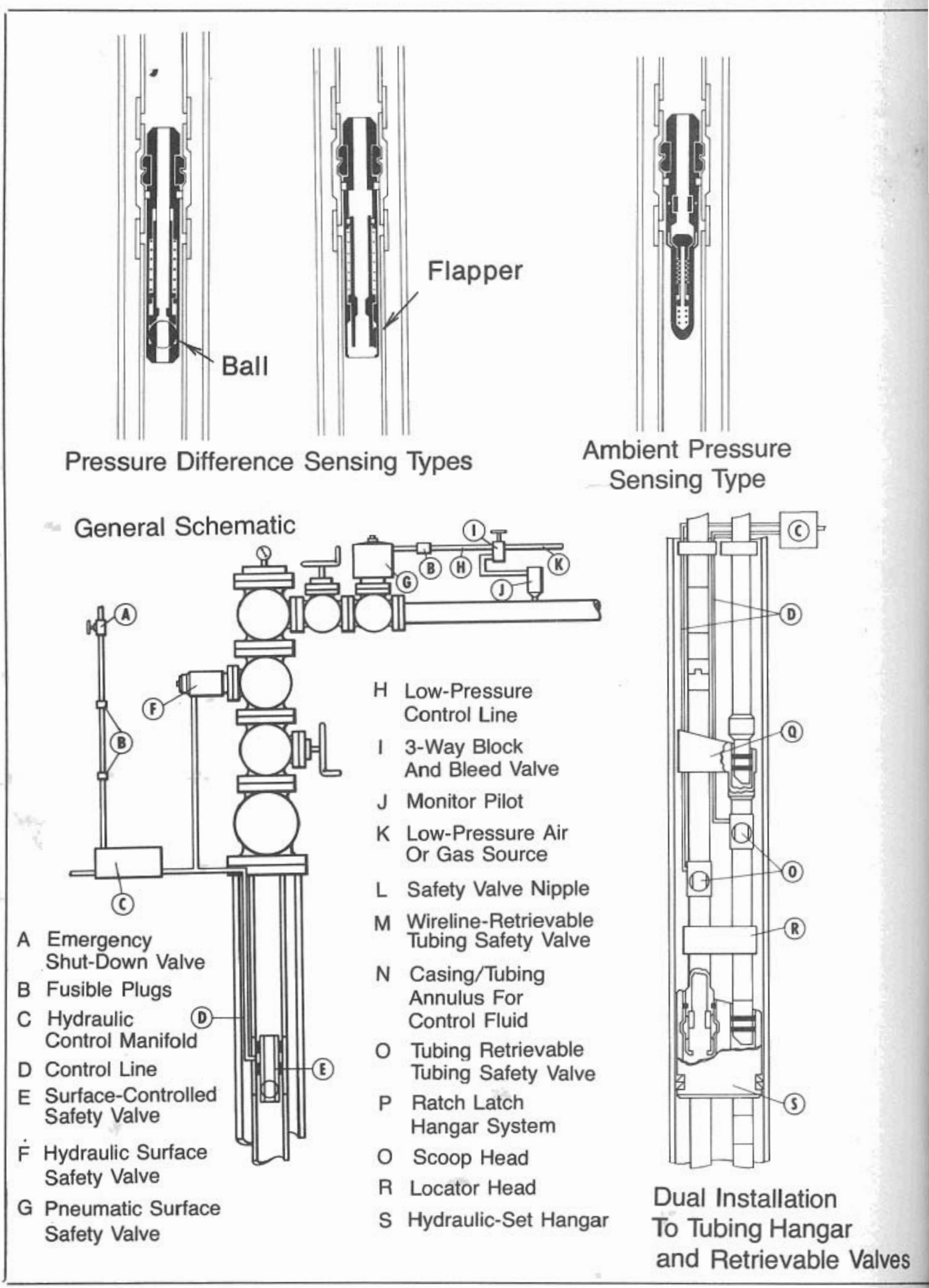

Fig. 14.1 *Types of subsurface safety valves and completions*

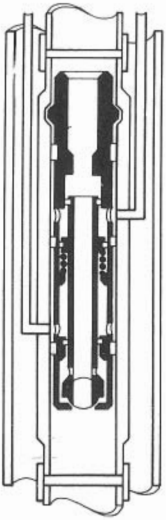

Balanced Piston, Two Control Lines
(Ball Valve)

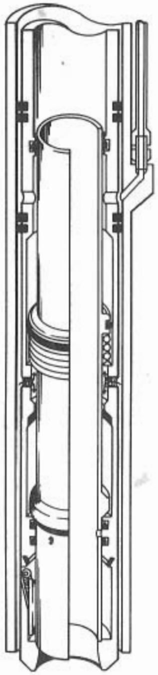

Single Control Line
(Flapper Valve)

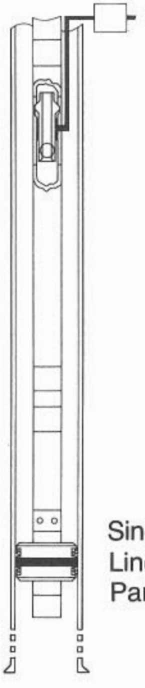

Single Control Line, Small Parallel Line

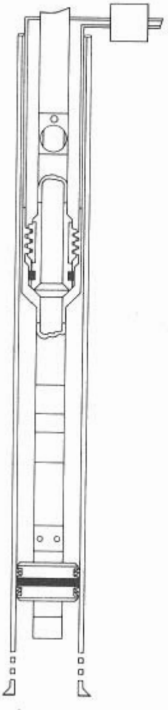

Annular Control Line

Besides the actuation variations noted above, there are different types of valves (Fig. 14.2). They are:

Poppet—The first types of tubing safety valves were in-line poppet valves. The simplicity of manufacturing this type of valve is the main reason it first was chosen. The actuator is rugged, concentric, and dependable.

Since the flow must be deflected around the valve and by the sealing surfaces, sand erosion is a problem.

Flapper—The flapper valve is a special type of poppet valve that is hinged on one side instead of movable directly in the line of flow. The advantage is that when open, flow is straight through. The mechanism usually is designed so that the valve is opened by a tube that also protects the sealing surfaces from flow cutting and smooths the flow conduit.

Ball—Ball valves have the protected seal and smooth straight conduit features of the flapper, plus the advantage of a wiping action that tends to clean the sealing surfaces of particles that might inhibit sealing.

Valves are installed either by standard wireline methods into nipples in the tubing string or as a part of the tubing string.

Tubing retrievable valves—Flow area is the common reason for using tubing retrievable safety valves. It should be remembered that flow restriction through a short small hole may not be as great as through a long larger hole. Computer analysis will determine the significance of hole size.

Tubing retrievable valves also permit the running of wireline equipment through them without disturbing the safety valve. Usually

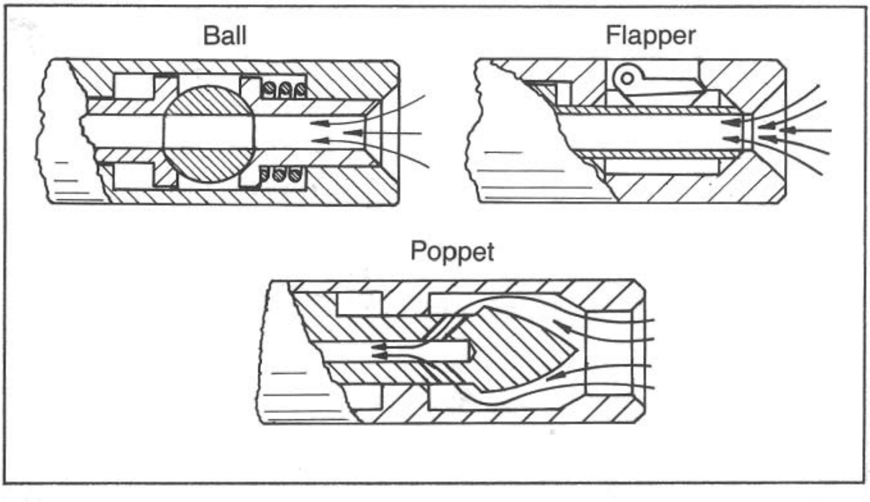

Fig. 14.2 *Types of valve mechanisms used in subsurface safety valves*

the safety valve is installed within 500 ft. of the surface and in conjunction with a tubing hanger. This permits plugging the tubing with a wireline set plug and retrieving the safety valve with light duty workover equipment. It also reduces the hazard of damage to the rest of the well. Even with the tubing hanger, removal for maintenance may be expensive and slightly more risky.

Subsurface safety valve design options are shown in Fig. 14.3.

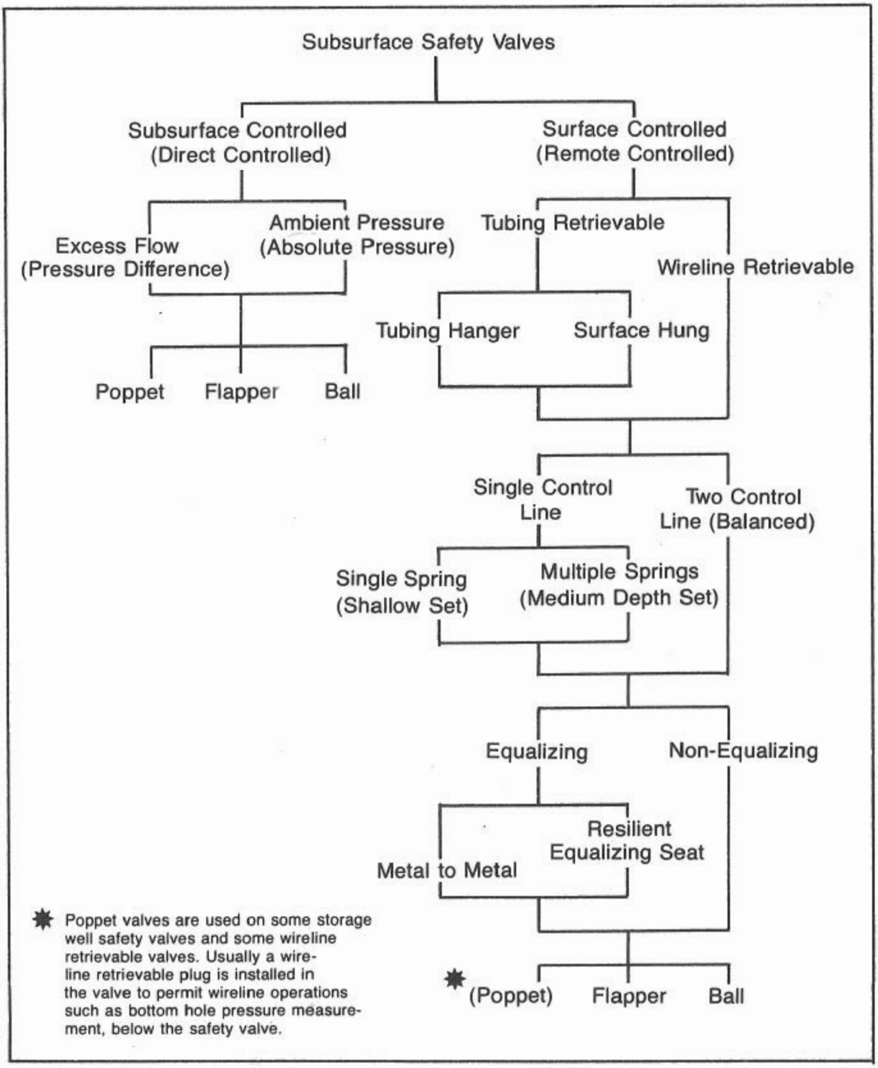

✱ Poppet valves are used on some storage well safety valves and some wireline retrievable valves. Usually a wireline retrievable plug is installed in the valve to permit wireline operations such as bottom hole pressure measurement, below the safety valve.

Fig. 14.3 *Subsurface safety valve design options*

Wireline retrievable valves—The overriding advantage of wireline retrievable safety valves is the ease with which they can be retrieved for maintenance. Since the restriction through the valve is usually much less than flow friction through the tubing, the main disadvantage is that they usually must be removed for wireline work below.

Safety valves are installed in the special nipples with a lock mandrel assembly. Various types of lock mandrels are available, but they must be matched with the nipple. Hence, the type of lock mandrel is determined by the type of nipple in the well. Some types of direct controlled safety valves will require a wireline operable equalizing valve between the safety valve and the mandrel assembly.

When choosing the specific combination of nipple, lock mandrel, and safety valve, pressure limitations on each need to be considered. For any combination, the component with the lowest pressure rating determines the pressure rating of the installation. Pressure ratings need to be chosen in light of the requirments of API Spec. 14-A, vs. the ratings of the manufacturer, vs. the requirements of the installation. Tight design requirements may not fit the standard ratings of API specifications.

S. V. placement

The primary advantage of using a subsurface safety valve is protection of the safety valve from fire damage. This implies that the safety valve needs to be set just below the ground level. "Just" usually implies about 150 to 300 ft. below the mudline for surface controlled valves. Subsurface controlled valves usually are set much deeper, closer to the packer.

Depth limitations on a safety valve may be the depth at which annulus fluid hydrostatic head will collapse the tubing above the valve if pressure inside is bled to zero. Pressure near the top of the well will vary over a wider range than down deep in the well, so actuation adjustment for a direct controlled valve will be less critical near the top.

Surface controlled valves are limited on how deep they can be set by their ability to overcome the hydrostatic head of the control line fluid, with no help from tubing pressure. It is assumed that the worst condition is a gas well (negligible hydrostatic head) in the tubing, tight formation (large draw down) with long tubing string (big pressure drop), and a completely severed tree (wide open). Under these conditions there will be very little pressure in the tubing to help push the piston to the closed position.

When completion or well condition requirements make it necessary to set the valve a little deeper, a second spring may be used. This might extend the setting depth to the neighborhood of 1000 ft. (different for each valve).

If it is necessary to set the valve even deeper (for example, to be below the permafrost), it may be necessary to use a balanced piston and a second hydraulic line. Hydrostatic pressure is equal in the two control lines so the spring only needs to push out the small volume displaced by the piston and to overcome friction. Under flowing conditions, the dynamic flow friction through the partially closed valve will aid the spring, but this cannot be depended upon.

Valve designs

Variations of valve arrangements for equalizing and non-equalizing, and metal-to-metal vs. plastic seat equalizing valves are shown in Fig. 14.4.

Reopening the valve imposes some additional problems. Most are associated with the pressure differential across the valve. Some problems are associated with serious wear of the sealing surfaces. The added load requires much higher piston pressure or some means of equalizing pressure across the valve.

Some installations are designed to require equalizing across the valve by pumping down from the surface. Where this is undesirable, the surface controlled valve may be supplied with a built in equalizing valve. The equalizing valve may be a secondary seat behind the primary seat of a ball valve.

The first movement of the seat opens the equalizing valve. After surface pressures have stabilized, further pumping opens the safety valve. Care should be exercised to insure full equalization. The equalizing valve may have a polymeric insert in the seat in order to insure bubble tight sealing. However, if pressures are too high (3,500 psi or so) a metal-to-metal seal is needed. Plastic doesn't last long under higher pressure service.

Installations

Safety valve nipples can be provided with a sliding side door (sleeve) valve to isolate the the control line when the valve is removed from the nipple. A "dummy choke" can be used too, but an additional trip downhole is required.

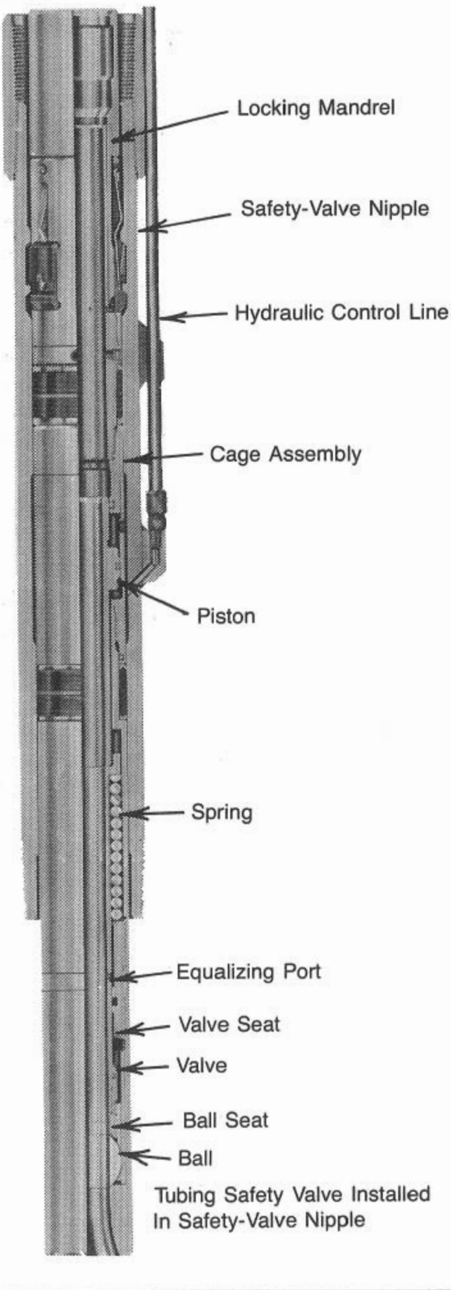

Tubing Safety Valve Installed In Safety-Valve Nipple

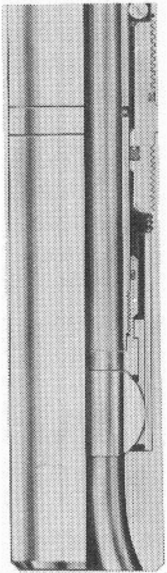

Tubing Safety Valve With Metal-To-Metal Seats, Non-equalizing

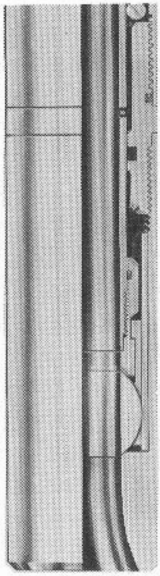

Tubing Safety Valve With Resilient Element On Secondary Seal

Fig. 14.4 *Variations of valve arrangements for equalizing and non-equalizing, and metal-to-metal vs. plastic seat equalizing valves*

Control lines consist of either small diameter pipe or tubing (1/8-in. pipe, 1/4-in. or 3/8-in. OD tubing) attached to the outside of the production tubing, or the annulus between the tubing and casing above the hanger packer. Although the annular type is a much more rugged installation to run, the amount of pumped-in fluid required to operate the valve is increased from less than 10 cubic inches to several gallons.

Most of the increased volume is required to compress the liquid to raise the pressure for opening the valve. This added volume seriously affects the design of the required control manifold. Some manifolds have required reservoirs with a 500-gal. capacity. Closure times are proportionately long.

Control pressures are somewhat above the shut-in tubing pressure. The control pressure must be able to overcome the tubing pressure, plus the spring force against the piston, plus friction, less hydrostatic head. As a rule of thumb this overpressure is 1000 psi or less above the shut-in tubing pressure.

When high flow rates dictate annular or combination tubing/annular flow, a special safety valve and completion design is used. The safety valve becomes an integral part of the completion design since it may be a limiting restriction to flow. Completions like this are worthy of elaborate and expensive designs.

15

Choosing Materials

Materials characteristics

The material for every mechanical design is chosen by the designer because he thinks it is the best material, considering all the features of the design and material. Features, which sometimes conflict, include:

1. Cost—Time and money are a part of every design.

2. Availability—If you can't get it, it doesn't matter how good it is.

3. Strength—There is a stress at which a material will deform permanently. This is yield strength. There is a greater stress at which it will break. The greater the difference is, the more ductile the material, and the more energy that can be absorbed if the system failed. The strength of a material generally is measured by pulling apart a specially machined specimen (Fig. 15.1). This is not necessarily the strength at which a part will fail. Massive parts seem to lose ductility and the ability to distribute load, and they may fail at a lower stress than the tensile specimen would indicate. Strength is measured in pounds per square inch (psi).

4. Ductility—Ductility will enhance the strength of a part. It is measured in percent elongation in a 2-in. gage length on the test specimen, and the reduction in cross sectional area at the break compared to the original diameter.

5. Notch toughness—This characteristic usually is measured with a Charpy V-notch impact test. Usually notch toughness concerns the problem of materials becoming brittle (not ductile) at low temperature. The measurement is made in ft-lb of energy absorbed in breaking a standard sample with a pendulum of a standard test machine.

6. Corrosion resistance—There are two types of metal "corrosion" problems in oilfields: weight loss corrosion, and embrittlement or stress cracking of susceptible metals in a chloride (salt water) or sulfide (H_2S) environment. Corrosion resistance of metals is affected by their position in the electromotive series. When two dissimilar metals are placed in an electrolyte such as brine and are connected electrically, a battery is formed which will cause one of the metals to corrode preferentially. The

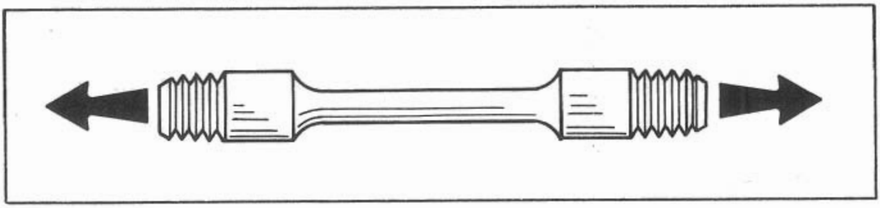

Fig. 15.1 *Tensile test specimen*

other may be protected from corrosion by the "sacrifical anode". This is called galvanic corrosion, which limits the use of some metal combinations in a device exposed to salt water and other electrolytes. Compatibility of non-metals is a similar concern.

7. Manufacturing characteristics—These include machinability, weldability, forgeability, and castability.

8. Light transmission—Transparency can be important for items such as stem protectors and windows.

9. Melting temperature—Some alloys melt at room temperature, others above 5,000 °F. Each has its advantage.

10. Hardenability—Some parts need to be made in a soft condition and hardened by heat treatment to resist denting or wear. Hardening also increases strength and decreases ductility. Hardening can be local, near the surface, or deep, throughout the part. Application determines which is best.

11. Galling resistance—Galling is "cold" welding due to the rubbing of one part against another. Aluminum and stainless steels are alloys which are very likely to gall if rubbed against another similar part without lubrication or hardness difference.

12. Work hardening—The hardening that occurs when a material is plastically deformed.

The characteristics of any general type of material (steel, nylon, glass, bronze, etc.) can be modified to some extent by variations in compounding, alloying, or processing, but the modifications will fall into a limited range. For example, steel cannot be made much weaker than 25,000 psi yield strength, bronze cannot be made much stronger than 80,000 psi, glass cannot be made ductile, etc. (Fig. 15.2).

Types of materials

This is intended to serve only as an outline for discussion of some of the characteristics of the more common materials used. The characteristics explain why the materials are used and some of their limitations.

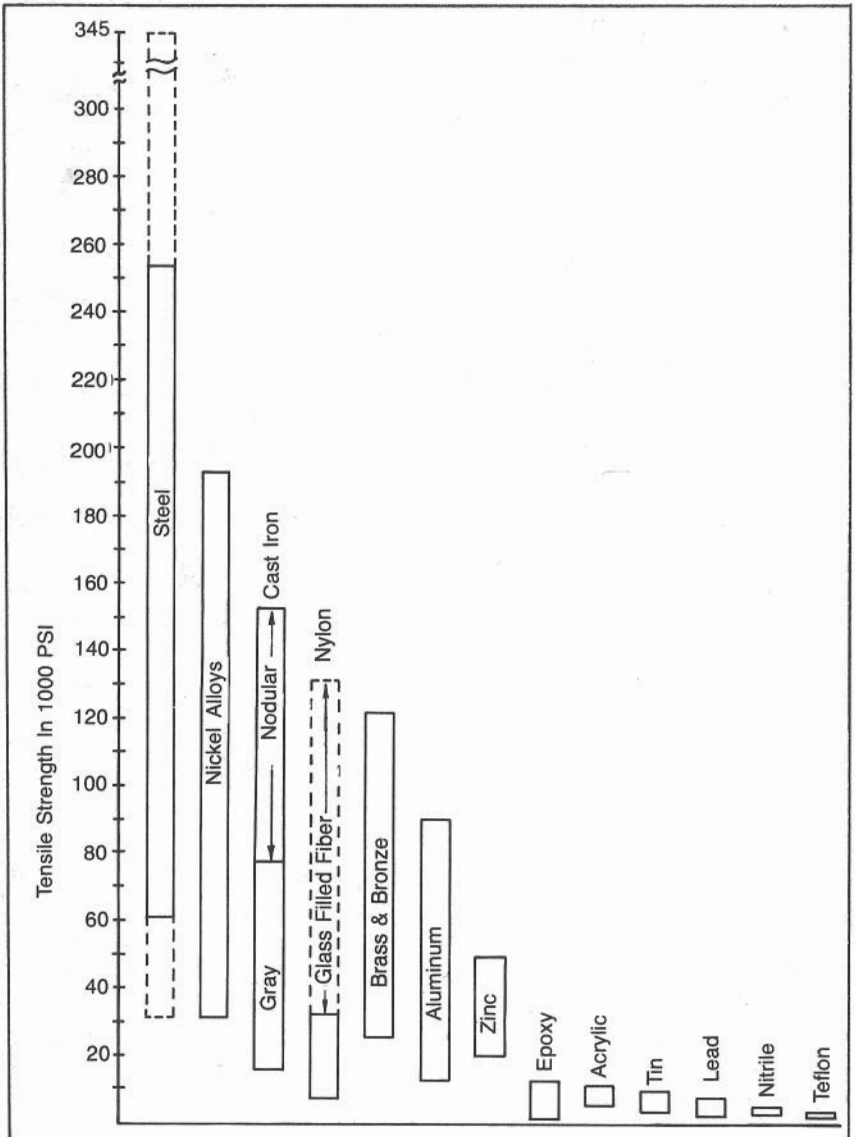

Fig. 15.2 *Tensile strengths of various materials*

This should be understood so that the proper equipment can be chosen for various applications, and so dangerous situations can be avoided.

The major types of materials used for safety systems are outlined in Fig. 15.3. The chart, however, is not complete.

Ceramics and cermets—The characteristics of these materials that first come to mind are that they are hard and brittle. This hardness is desirable in components used for wear, such as choke beans. Cermets such as tungsten carbide are compounds of metals and ceramic particles. The metal is an adhesive which binds the hard ceramic particles

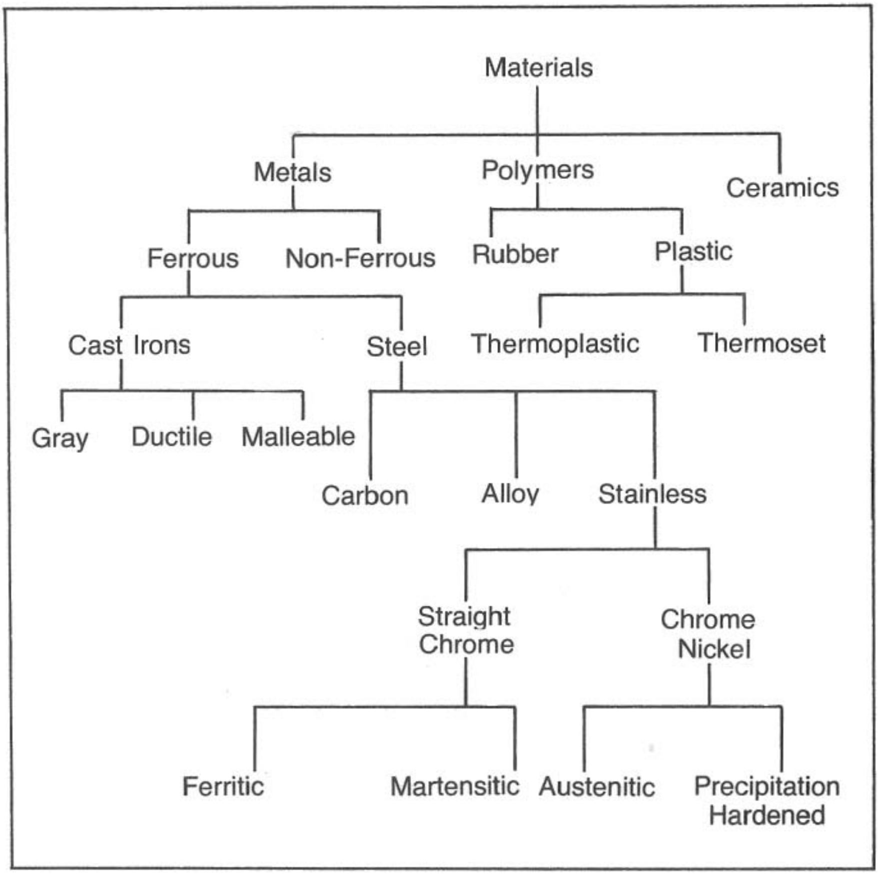

Fig. 15.3 *Major categories of materials used in safety systems*

together. Ceramics, such as aluminum oxide (alumina, rubies), are metal compounds. They do not have a metallic nature.

Polymers—The two main classes of polymers, rubber and plastic, are differentiated by their mechanical elastic properties, yet there really is no sharp distinction between them. Indeed some, such as urethane, are found in both classes, depending upon the particular compounding. Rubber is known for its elastic resilience and flexibility that makes it so useful as a packing and cushion material.

Much of the time the polymer is not used by itself. It is mixed with other materials to obtain a more optimum blend of properties. These other materials may be other plastics, rubbers, or inorganic materials such as glass, graphite, or molybdenum disulfide.

These additives help to improve some characteristic such as strength, stiffness, oil resistance, low temperature resilience, high temperature resistance, or slipperiness. Usually the improvement of one property is at the expense of another. So, for each application, the manufacturer will use what he thinks is the best compounding for the occasion. No one compound is best for all applications.

Rubber—The most generally used types of rubber in safety systems have resistance to oil as a primary requisite. Most common is nitrile. Nitrile is known also as Buna-N or Hycar (brand name).

The most O-rings used in petroleum service are of nitrile. It is strong and resistant, generally, to most of the fluids encountered except hydrogen sulfide. It will perform well through most of the temperature ranges encountered (less than 275 °F.). Neoprene is another very common rubber. It is the basic polymer for the very high performance choke packing, although it is highly filled with asbestos.

When temperatures get high (250 °F. to 400 °F.), or in an H_2S environment, the fluorocarbon elastomers Viton or Fluorel become affordable. They have only moderate strength, but can be compounded with glass, molybdenum disulfide, or asbestos for resistance to extrusion. These can be added to most basic polymers to strengthen them.

Resistance to H_2S, and cold weather resiliency, has offered opportunities for the use of polyurethane in seals; but, in the presence of hot water (180 °F.), it crumbles. There are many applications where this high temperature could be encountered due to crude and/or sun temperatures, so it should not be expected to endure crude oil and gas which contain any water. Quite often the urethane is used without solid fillers and therefore can be identified by its yellow color.

Even for urethane (yellow) or silicone (white), there is no dependable way by sight or feel of identifying the type of rubber that makes up a part. Most rubber is compounded with carbon black as a filler, which colors it black; but most rubbers can be molded in many colors. Since the hardness and "feel" can be identical for most kinds of rubber—depending upon the specific compounds, section geometry, and mold surface—it is imperative to keep the parts carefully packaged, marked, and stored to prevent mixing them.

Plastic—Like rubbers, different plastics have different compatibilities with various media. They have different mechanical properties and are processed differently. The two principle classes are thermoplastic and thermosetting. Thermoplastics are molded by melting resin, injecting it into a mold, and letting it cool to harden.

From this it follows that the higher maximum service temperatures are achieved by thermosetting plastics. Thermosetting plastics are molded by pouring plastic into a mold and applying heat and/or hardening agents to perform a chemical change that will harden it in the shape of the mold. Heating the part will not melt it. Some plastics, like TFE Teflon, have such high melting points that they must be molded with a sintering process. Other plastics, like the adhesive cyanoacralate (Loctite, Eastman 910), must be hardened either by being put between two close surfaces and/or by oxygen exclusion.

Most plastics are subject to attack by ultraviolet light. This encourages the use of protective methods where plastics are to be used outside. The simplest and most common protection is the addition of pigments. For this reason it is better to use black nylon or PVC (polyvinylchloride, "Polyflo") tubing for pilot control lines. In some applications a plastic that exhibits good resistance to ultraviolet light should be used. The most common of these is acrylic.

Plastics used for packing should be flexible, low friction, extrusion resistant, and compatible. Teflon is compatible with almost any oilfield material. It has good high temperature (400 °F.) and low temperature (−90 °F.) capabilities. It has about as low friction as anything. It has fair extrusion resistance and good flexibility. However, after a while it will relax away from the surface and leak. Seal rings of Teflon must be mechanically energized with a spring or rubber seal ring to take and maintain a seal. It therefore is primarily a back-up to a seal in most places where it is used in a pressure energized seal application.

Until recently the only high temperature (400 °F.) plastic available was Teflon. Unfortunately, Teflon extrudes at high pressure.

Two polymers show promise for extreme service conditions of pressure, temperature, and fluids. These are the polyimides (Vespel) and polyphenylene sulfide (Ryton). Both are rather stiff, so parts must have thin geometry to provide much flexibility.

Nylon is a strong thermoplastic with medium stiffness. It is compatible with sweet crude, but it absorbs water (10%) and swells, and laboratory data indicate hydrogen sulfide will attack it. Another plastic that may compete in general with nylon is acetal (Delrin), which doesn't absorb much water but crumbles badly in sour crude.

Metals—As Fig. 15.3 shows, there are several major classes and subclasses of metals. The most important of these divisions is between those that are mostly iron (ferrous) and those that are not (non-ferrous). Metals that are mixtures or solid solutions of more than one element are called alloys.

Since all metals of more than one element are alloys, it seems a little contradictory to call a whole class of steels "alloy steel." Indeed any steel is at least an alloy of iron and carbon. "Alloy steel" is simply a common broad name that has come to have a narrow meaning.

Non-ferrous alloys

The term "non-ferrous" does not mean that there is no iron. It just means that it is not primarily iron.

Copper Alloys—The most common are bronzes and brasses. Brass is an alloy of copper, zinc, and some other constituents. Bronze is an alloy of copper and tin, copper and lead, or copper and zinc. So a copper and zinc may be called bronze or brass. Other elements that are alloyed with copper include iron, aluminum, manganese, beryllium, and nickel.

Generally, the bronzes and brasses are corrosion resistant in the oilfield environment. In hydrogen sulfide and water they corrode very rapidly, though sulfide stress cracking is not a problem. Bronzes have good bearing and non-galling characteristics. Strengths of the common copper alloys run between low and moderate (10,000 to 80,000 psi, typically 50,000 psi max), depending upon the alloy, cold work, and heat treatment.

Aluminum alloys—The strength range of aluminum alloys is similar to that of copper alloys, but corrosion resistance is highly variable. Aluminum is used sometimes because it corrodes rapidly (in caustic or acid solution) and often because it is corrosion resistant. It is not used often for its poor resistance to corrosion. This points out the need for proper application. Generally, aluminum alloys corrode sacrifically to steel where galvanic corrosion can be a problem. Aluminum for sea atmosphere use should be a copper-free alloy. Anodize and paint aluminum where practical.

Cobalt alloys—Cobalt is an "exotic" material, but the petroleum industry has some exotic needs. Most applications for cobalt are for hardfacing alloys that will need wear and corrosion resistance since they are to be welded onto gates, seats, and the like. Colmonoys and Stellites are the more common of these. Cobalt is used also in ultra-high strength alloys, such as Elgiloy and MP35N, that are resistant to sulfide stress cracking. Cobalt is used also in some magnetic materials. It is expensive.

Nickel alloys—Nickel is the main constituent of Monels and Inconels which have good corrosion resistance and medium to high strength. They are useful particularly in equipment for hydrogen sulfide service because of their resistance to sulfide stress cracking and general corrosion.

Monels are approximately 70% nickel and 30% copper. The heat treatable grade, alloy K-500, is used often for such critical applications as valve stems for sulfide service.

In a few select fields Monel is not good because copper is leached out leaving only nickel and copper sulfide corrosion products. For a few fields (Jay, Florida; and Pincer Creek, Canada, for instance), Inconel alloy X-750 is used successfully at a slightly higher cost. Nickel alloys and steels with nickel in them have excellent cold temperature notch toughness and ductility. Nickel is expensive.

Ferrous alloys

Iron is the most useful metal for structural purposes. It can be alloyed and processed to attain a very wide variety of properties. Except when high percentages of expensive alloying elements are added or when processed with extreme care, ferrous alloys are relatively inexpensive.

Irons—Iron with about 1% or less of carbon is steel. If there is more than about 2% carbon, it will not all stay in solution. When it is cast in a mold, the carbon comes out of solution. The most common form of this carbon is graphite flake.

Cast iron that has excess carbon in flakes is called gray cast iron. When a piece is broken the surface has a rough gray appearance. Usually the graphite flakes are randomly oriented throughout the part and may almost form continuous cracks. For this reason gray cast iron is not very strong in tension, and is brittle.

Cast iron can be cast in thin sections, but because of its tension weakness and because the flakes are almost continuous, it is generally not good for pressure vessels.

If just before it is put in the mold some magnesium is added to the melt, the excess carbon graphite will collect as little spheres, or nodules. The material around the graphite nodules is like a low or medium carbon steel. Since the nodules are not like stress concentrating cracks, the iron has some ductility. In fact, it called ductile iron because of the fact that it is so much more ductile than the older gray iron.

With the help of some alloying agents, rapid freezing will trap the carbon of cast iron in a combined form. The resulting parts will be very hard and brittle and will break with a white appearance. This "white cast iron" can be soaked at a medium high temperature for a week or so to cause the carbon to collect as little nodules of iron.

The result is a microscopic structure similar in appearance and properties to ductile iron. The resulting iron, malleable iron, may be used interchangeably with ductile iron in most cases (Fig. 15.4).

Cast irons are not very expensive and can be cast in complex and intricate shapes. Welding is a problem though. It can be welded, but finished weld strength is very difficult to assure.

Steel—Steel is an alloy of iron with less than about 1.2% carbon. If there is only iron and carbon it is called carbon steel. If there is less than about 6% of other alloying elements the metal is called low alloy steel. Steel with more than about 11% chromium is called stainless steel.

The carbon in the steel is the main ingredient that makes it possible to strengthen most steels by heat treatment. If steel is heated to above a certain temperature and then cooled rapidly (quenched), the crystalline structure will change to a very hard form called "martensite". With the hardness come strength and brittleness.

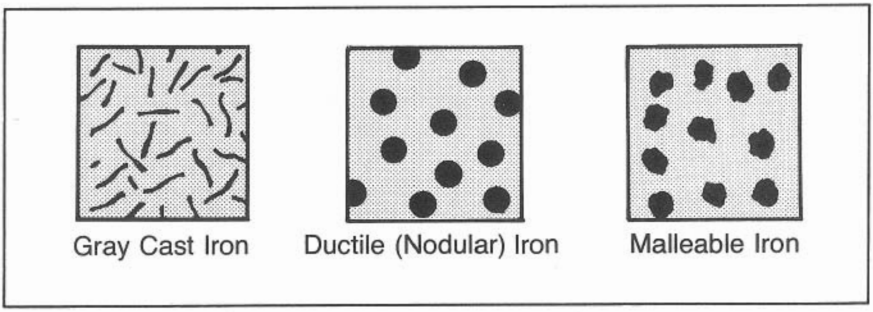

Fig. 15.4 *Microstructures of cast irons showing graphitic carbon formation etched and enlarged 200X*

By soaking the part for more than an hour at a temperature between 700 °F. and 1,300 °F. or so (tempering or drawing), some or all of the internal stresses will be relieved and the material will become more ductile. The higher the temperature, the softer and more ductile the metal will be.

If, instead of cooling very rapidly from the higher temperature, the metal is cooled very slowly, the steel will be very soft. This is called annealing.

Within limits, the more carbon there is in steel, the harder it can be made by quenching. At the same time it becomes more susceptible to cracking during quenching and is a lot more difficult to weld. Most steel is low carbon steel, 0.08% to 0.20% carbon. Medium carbon steel has about 0.20% to 0.45% carbon.

Alloy steel—Small additives of such elements as chromium, nickel, manganese, molybdenum, and vanadium have important effects upon the response of the steel to heat treatment and the effect it has on the mechanical properties.

Among other things, it greatly affects how rapid the quench must be and thus how deeply it can be fully hardened in a thick section. Not all additions are entirely good. Nickel for example can make the material more susceptible to sulfide stress cracking. In general the alloy steels require greater care in welding and heat treating.

Stainless steel—The addition of chromium to steel improves the corrosion resistance of steel. It does so by forming a chromium oxide film on the surface of the part. This film may be only a few molecules thick, but it acts as a barrier to further corrosion in an oxidizing environment.

When there is about 11 to 24% chromium in the steel, that film will form automatically (passivate) and will give good protection. Some stainless steels have just chromium and carbon (straight chrome).

If there is not enough carbon to make the steel hardenable by heat treatment, it is called "ferritic" stainless. If there is enough carbon, it is "martensitic" stainless. The addition of about 8% nickel (and very little carbon) will keep the crystalline structure in a form called "austenite". Hence, it is "austenitic stainless", which in the soft (annealed) condition is non-magnetic.

Straight chromium stainless—The most common of the straight chromium stainlesses in safety equipment is 12% chromium martensitic stainless. Where severe weight loss corrosion is a problem, as in high CO_2 and salt water wells, the 12% chrome stainless is the usual choice for valve bodies and bonnets. It is used for the critical parts, such as stems, gates, and seats. It is very deep hardening but it is difficult to weld and is subject to cracking during heat treatment and welding. It will rust a little in offshore environment, but rate of weight loss is very slow.

Where even a little corrosion can be serious, as on polished stems, there needs to be more chromium in the alloy. That is when a 16% chromium stainless should be used. The most common type has 2-3% nickel, but is martensitic stainless and is referred to as a straight chromium stainless. The nickel makes it a very tough alloy but eliminates its usefulness in hydrogen sulfide service.

Chromium nickel stainless—The austenitic stainlesses have about 18% chromium and 8% nickel. They are not hardenable by heat treatment. Cold working (plastically deforming at lower than the recrystallizing temperature) is the way they are hardened, and this can be very effective for such items as springs.

Austenitic stainless is very ductile and stays ductile down to very cold temperatures (−90 °F.). In the annealed condition they are non-magnetic. Corrosion resistance is excellent, except in the presence of chlorides (like salt water) and sulfides (like hydrogen sulfide) when highly stressed. They then suffer from stress cracking.

Austenitic stainlesses are easily welded, especially the extra low carbon varieties that are used to reduce the formation of embrittling chromium carbides.

Precipitation hardening stainless—The need for a stainless steel with the corrosion resistance of austenitic stainless and the strength of martensitic stainless brought about the development of the precipitation hardening grades of stainless.

Precipitation hardening is accomplished by dissolving at high temperatures more of a substance, like titanium or aluminum, into the metal than it can hold at a lower temperature. When the metal is heated to an intermediate temperature (about 900 °F.), little pieces of the precipitant will begin coming out of solution and occupying more space separately than was evidenced in solution (like sugar and water). This puts the steel under a strain and makes it stronger. Most other metals, like aluminum, copper and Monel, are hardened the same way.

Names

Discussions thus far have referred to types of metal by description. Each alloy has its own name. Names are assigned by the technical society most concerned about the standards involving the particular type of alloy. Some names are proprietary and are assigned by the company developing them.

Wrought steels are referred to primarily by the number series developed by the American Iron and Steel Institute (AISI). Carbon and alloy steels have a four-digit number. The first two digits describe the type of alloy and the last two digits tell the nominal carbon content. Thus "1018" is a carbon steel with 0.18% carbon, 4140 is a low alloy steel with chromium and molybdenum and 0.40% carbon.

Stainless steels have a three digit AISI number. The 300 series are the austenitic stainlesses and the 400 series are the straight chromium grades.

American Society for Testing and Materials (ASTM) has designations for materials but there is little or no significance to the numbers except that ASTM-A specifications are for ferrous alloys and ASTM-B specs are not. The same material may show up in several specifications.

For example, the cast equivalent of AISI 410 is grade CA-15 of ASTM A-351, A-296, and A-487. Cast ferrous alloys and plate are usually specified by the ASTM number. Bar and tubular materials are specified more often by AISI number.

API has developed some material standards for tubular goods and wellhead equipment. The wellhead equipment specification, API Spec. 6-A, describes the materials only by mechanical properties (with a partial exception of Type 4). The chemistry is excluded intentionally.

Stainless equipment usually is 12% chromium stainless (AISI 410 or CA-15 grade of ASTM A-296, A-351 or A-487). Non-stainless usually is carbon steel or low alloy steel (1020; 4130; 4140; 8620; ASTM A-487 Class 4, 8 or 9; etc.)

Service

To this point, materials have been described as to the various types. For the same type of part, different materials will be used for different service conditions. Some of these are described below:

Standard—Standard service is non-corrosive, −20 °F, to +250 °F., no H_2S, conditions for which most equipment is used. Unless otherwise specified these conditions are presumed. One important connotation in industry literature is that there is no hydrogen sulfide. Standard service is the least expensive.

H_2S service—The significance of hydrogen sulfide is the effect it has on causing hydrogen enbrittlement stress corrosion cracking in suscepti-

ble materials. Materials which can be used for sour (H_2S) service also can be used for standard service. The reverse is not necessarily true. NACE standard MR-01-75 defines H_2S service as operation in fluids with liquid water and H_2S with a partial pressure of .05 psia and a total pressure of 65 psia or more.

Low temperature—The standard temperature range for API equipment is from 20 °F. to +250 °F. (+100 °F. for ANSI). Equipment for lower temperatures must have special materials that do not become brittle or otherwise unserviceable at the lower temperature. In the case of metals that are not inherently ductile at the minimum service temperature, expensive Charpy V-notch impact tests must be made on samples from each heat and heat treat load of parts to assure compliance. The standard minimum service temperatures are −25 °F., −50 °F. and −75 °F.

Some CO_2 present—Most weight loss corrosion concern is related to the amount of CO_2 present in the well fluids. The usual designation for valve material combinations, where there is "some CO_2 present", is stainless steel trim. This means the valve body and bonnet are of alloy or carbon steel and the gates, seats, and stem are stainless. Unless otherwise stated, this type of corrosion is the only concern, there is no H_2S present, and temperatures are within the standard range.

Extreme CO_2 service—A lot of CO_2 with water causes accelerated weight loss corrosion. The corrosiveness results to a great extent from the carbonic acid formed by the CO_2 and water. The standard material combinations include 12% chrome stainless (410 or CA-15) body and bonnet, and stainless or other corrosion resistant materials for other internal parts. It is presumed that no H_2S is present.

Some CO_2 and some H_2S—A little bit of H_2S is bad, but a lot of H_2S is not much worse. Although laboratory data indicates a correlation between H_2S concentration and time till failure, it doesn't affect equipment design. The equipment either is or is not designed to resist sulfide stress cracking. "Some CO_2" has the same connotation as described above, so stainless trim is the material combination used.

There are additional provisions for insuring resistance to sulfide stress cracking. Some have to do with material differences, but heat treat control is the major technique used. "Some H_2S" is being described by NACE Specification MR-01-75 as in excess of 0.05 psia partial pressure with water present. Partial pressure is determined by multiplying the mol fraction (mol percent ÷ 100) of H_2S in the gas times the total system pressure. It is the responsibility of the user of equipment to specify to the supplier when the service is sour.

"Some CO_2" and "some H_2S" may add up to a lot of corrosion. The combination may be more corrosive than just the sum of the two individually.

Extreme CO_2 with H_2S—"Stainless" or "full stainless" is the designation for valve materials for this service. The body and bonnet are specially heat treated martensitic stainless and the internal parts likewise are corrosion resistant. Quite likely the stem will be of Monel K-500.

Waterflood—Produced fluids usually have little or no free oxygen present. Waterflood waters, on the other hand, probably will have a lot of dissolved oxygen and probably will be very corrosive. For this service, austenitic stainlesses will be used. The internal surfaces of the body and bonnet may be coated with a plastic or electroless nickel.

It should be noted that for standard service some valve manufacturers normally will supply 10,000 psi and 15,000 psi valves with stainless trim. For 15,000 psi and 20,000 psi it is not unusual for full stainless valves to be supplied for standard service.

Partially, this is because the service is so critical. It is also because of the deep hardening response of martensitic stainless to the heat treatment required by the high pressure for the thick sections.

It is difficult to provide equipment for the combination of CO_2, H_2S, and low temperature. The reasonably priced materials that can stand the CO_2 are brittle at the low temperature. One material, CA6NM, can handle CO_2, H_2S, and cold, but it is susceptible to chloride stress cracking. Salt water is almost always present.

Materials for safety equipment.

The following is an explanation of the material selections for various illustrative parts of safety equipment.

Bonnet—The bonnet material for a safety valve should match the body material. Sometimes it is desirable to use a stainless bonnet, which is excess inventory, in place of a less expensive alloy bonnet, which would have to be specially made. This is satisfactory if there is no problem with galvanic corrosion, i.e., little or no free water. But when the well fluids produced have more than about 25% water (later in the life of the well), there is a high probability of accelerated weight loss corrosion due to the galvanic cell being set up between the stainless bonnet and other parts of alloy steel.

Stem—Weight loss corrosion is far more critical for moving seal surfaces. A little roughness will cause leaks in packing when they rub together. For this reason the critical surfaces should be of corrosion resistant material. The most generally severe service for these parts is atmospheric corrosion of the polished surface in offshore air.

For sour service K-500 Monel is commonly used. For sweet service the 16% and 17% stainless steels work well (431 and 17-4 PH). Large size stems which require large pieces of metal are candidates for alloy steel with a flame spray welded thick film of Colmonoy No. 5 alloy. Cost and material availability determine the best choice.

Cylinder—Alloy steel, carbon steel, or ductible or malleable iron must be protected from corrosion in coastal or offshore air. Lack of coating integrity limits the use of these materials for high pressure service. Pneumatic cylinders commonly are made of ductile iron or malleable iron. They usually are coated with an epoxy or phenolic paint.

Some cylinders are coated with an electroless nickel plating. High pressure cylinders are more commonly made of 12% chrome stainless. Arctic applications sometimes require the use of alloy steel cylinders to comply with ductility and toughness requirements. These situations usually do not require the normal corrosion resistance because control fluids inhibit corrosion. Most of the time the surfaces are protected and there is little free water in the air. Stainless cylinders are stronger and more ductile than are cast irons, but economics often prevail.

Piston—Some hydraulic actuator pistons are made of stainless in order to reduce the hazard of galvanic corrosion, but the usual is ductile or malleable iron, or alloy steel. Large pistons may be partially protected with a paint coat.

Some pneumatic pistons are made of ductile or malleable iron of limited ductility and strength to provide overpressure protection as a contained rupture disc.

Springs—Power springs for actuators are commonly plastic coated alloy steel wire. This is a non-shock-loaded part, so the material performs well in cold service even though it is brittle. The material is susceptible to sulfide stress cracking, but normally it is acceptable since the primary closing force is from valve body pressure, the spring normally is outside the sour environment, and H_2S resistant springs are extremely expensive.

Smaller springs for sour service pilots and the like are made of nickel alloys such as Inconel X-750 instead of the stainless used for standard service.

Pilots—Except for some highly stressed parts, austenitic stainless steel is the common construction material. Free machining grades (303, 416) are used where pressure containment is not critical. Some highly stressed parts are made of 17-4PH, or Monel K-500 for sour service. Many instrumentation people have a strong preference for 316 stainless steel because of its superior corrosion resistance offshore.

Packing adapter—Male packing adapters are just formers that take up space, so they are often phenolic. Female adapters may serve as close fitting bearings, so their material selection is more critical. Brass or bronze works well in standard service but corrodes rapidly in sour service. Monel or austenitic stainless, if annealed, works well in sour service. It is desirable that the packing adapter be a lot softer than the moving seal surface in order to reduce the scoring or galling.

Packing retainer—Unless there are other conditions to satisfy, packing retainers are made of alloy steel. They normally are screwed onto the mating part. The choice of alloy or carbon steel reduces chances of galling.

Control manifolds—Wherever possible, use 316.

It should be understood that the parts and materials recommended are general cases. If a specific situation is critical, the individual part needs to be checked. For inventory reduction purposes some standardization on materials suitable for severe service (H_2S, CO_2, etc.) may be used on less severe applications.

Fig. 15.5 shows some metallic materials used in safety equipment.

Mat'l	Name	General Type	Chemistry %, NOM *									Tensile Yield Strength	Comments
AISI	Other		C	Cr	Ni	Mo	Mn	V	Cu	Fe	Other	Range X 1000 psi	
1020		Low Carbon	.20	—			.45			Bal		30–60	
4130		Low Alloy	.30	1.0		.20	.50			Bal		50–160	
4140		Low Alloy	.40	1.0		.20	.80			Bal		60–160	
4340		Low Alloy	.40	.80	1.80	.25	.70			Bal		65–165	Not good for H_2S (Ni)
8620		Low Alloy	.20		.55	.20	.80			Bal		56–120	
303		Austenitic Stnl.	.15 max	18	10		2 max			Bal		35–60	Free machine grade, difficult to weld, not good for H_2S (S)
304		Austenitic Stnl.	.08 max	19	10		2 max			Bal		35–125	
316		Austenitic Stnl.	.08 max	17	12	2.5	2 max			Bal		35–125	
410	ASTM A-___ CA15	Martensitic Stnl.	.15 max	12			1 max			Bal		40–150	
431		Martensitic Stnl.	.20 max	16	1.88		1 max			Bal		95–150	Not good for H_2S (Ni)
440C		Martensitic Stnl.	1.50	17	1.88		1 max			Bal		65–230	Not good for H_2S (Hardness)
17-4PH		Precipitation Harden	.04	17	4		1 max		4	Bal		75–185	
	Monel 400	Nickel Alloy	.12		66		.90		31.5	1.35		40–170	Harden by cold work only*
	Monel K-500	Nickel Alloy	.15		65		.60		29.5	1.00	Ti. 50/ A12-8	40–110	Precipitation Harden*
	Inconel 600	Nickel Alloy	.04	15.8	76		.20		.10	7.20		35–210	Harden by cold work only*
	Inconel X-750	Nickel Alloy	.04	15	73		.70		.05	6.75	Ti2-5/C6 Al .80/.85	40–170	
	ASTM B-134	Yellow Brass							66		Zn 34	17–60	
	ASTM B-150/2	Nickel Alum. Bronze			5.0		1.0			2-5	Al10	45–75	
	ASTM A-536	Ductile Iron	2.5				.50			Bal		40–90	Approx.
	ASTM A-47/220	Malleable Iron	2.2				.80			Bal		35–90	Approx. chem.

---

* Sulfur, silicon, and phosphorus are neglected though they may be important factors in alloying.

* 35 RC max for H_2S

Fig. 15.5 *Some metallic materials used in safety equipment*

16

Total System Design

Discussions on components, circuits, and criteria are academic unless they point toward useful application of the knowledge. The purpose is to create a safety system to protect a production facility so that oil and gas can be produced safely and efficiently.

This chapter deals with the application of the information discussed previously. Safety system design is the tailoring of concepts and equipment to a given production system.

To illustrate the types of solutions that can be used, this chapter includes sample problems. Sometimes there are several solutions to a given problem.

The examples are generally progressive in complexity to show that as the needs progress, the solutions increase in complexity. But the principles remain simple.

Many of the problems and their solutions are shown in diagrams. When data for an answer is presented, go to a source for information and verify the proper choice and why it is made. Different options should be considered. API specifications 6-A, 14-C, 14-E, and others should be consulted. ANSI Standard B16.5 needs to be consulted. Catalogs, listings, and design specifications need to be considered. All are valuable resources for solving the problems discussed here.

Many of the example solutions have numbers for which there is no apparent source. These numbers were shown to illustrate an approximate value that might be used in a practical situation. The numbers and specifications are not intended to be used in your real problem. You should refer to the actual data and specifications of the situation and equipment in your problem.

Problem 1: Flow line protection. This problem (Fig. 16.1) is a simple one with a simple solution:

Five existing shallow oil wells near a road and a stream are producing, with 350 psi flowing tubing pressure and 525 psi shut-in tubing pressure, directly into a pipeline with 250 to 300 psi flowing pressure. Because of proximity to a road and a stream, it was deemed

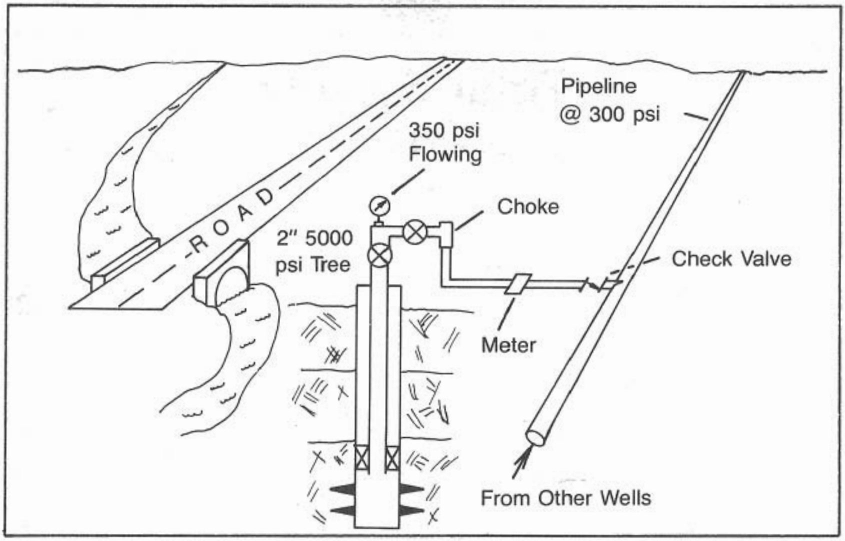

Fig. 16.1 *Simple problem requiring flowline protection (Problem 1)*

necessary to install protection to reduce hazard to motorists and pollution of the stream in case of flow line ruptures. The well produces sweet clean oil and water and a minimum of paraffin. The flow line is a 2-in. line pipe.

Solution 1: A solution is to install a direct controlled surface safety valve downstream of the choke (Fig. 16.2). The safety valve can consist of a line pressure powered actuator on a gate valve with a low pressure sensing pilot; or an integral piloted SSV with a low pressure pilot.

If there is a rupture of the flow line, pressure in the line will drop to the setting of the low pressure pilot which will actuate to close the safety valve. Since the low pressure pilot can sense pressure only at the valve, it must be placed downstream of the choke. A flow line break may not lower the pressure much on the upstream side of the choke. To provide maximum protection, the safety valve should be placed as close to the choke as is practical.

The pilot must be chosen for the proper service and pressure range. It must be set to actuate at a pressure below the lowest operating pressure but well above the minimum operating pressure of the safety valve.

The valve chosen depends upon several specific conditions existing at the location. Among these are end connections, pressure rating, and

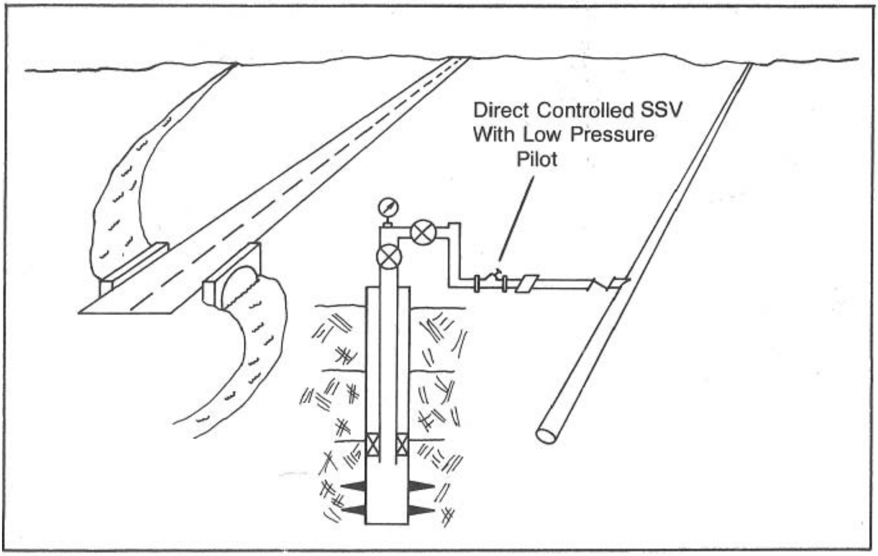

Fig. 16.2 *Direct controlled system for flowline protection (Solution 1)*

materials. To install the valve in an existing line it will be necessary to cut the line and prepare connections.

Below are listed some of the specifications that need decisions or that will affect the selection of the equipment. The data provided is for example purposes, other choices could be made. For example, 5,000 psi flanges or line pipe threads could be used.

Valve:

- Type—Line pressure powered and controlled
- End connections—Flanged end, 2¹⁄₁₆ in., 3,000 psi, API, R-24 (In some cases screwed end connections may be applicable.)
- Service—Standard (no H_2S), non-corrosive
- Body material—Alloy
- Bore—Significantly larger than the wellhead choke but not necessarily full-open nor thru-conduit
- Minimum operating pressure—100 psi, to insure enough pressure to power the valve

Pilot:

- Type—Low pressure sensitive
- Setting range needed—100 to 250 psi
- Setting range of pilot—75 to 630 psi
- Set point—240 psi

Additional materials and equipment needed include:

- Flanges—2 each, weld end, 2$\frac{1}{16}$ in., 3000 psi, carbon steel, API, for schedule 80 ASTM A-106 (unless screwed end valve is used)
- Studs—16 each, $\frac{7}{8}$-9 UNC x 6-in. length per API 6-A (ASTM A-193 Grade B-7)
- Nuts—32 each, $\frac{7}{8}$-9 UNC, per API 6-A (ASTM A-194 Grade 1)
- Ring Gasket—2 each, R-24, carbon steel
- Gages and valve to adjust pressure for setting pilot
- Wrenches and lubricants for making connections
- Welder to install flanges 12 $\frac{3}{8}$-in. apart face to face (12-in. end-to-end length of SV plus 2 x nominal standoff of $\frac{3}{16}$-in.)
- $\frac{1}{4}$-in. pipe by $\frac{3}{8}$-in. tube fitting and 15 ft of tubing to direct pilot exhaust to collection sump

Problem 2: Short flow line version of problem 1.

For this problem, consider that the flow line of the previous problem is so short that it is feared the safety valve may not have time to react before the line pressure drops below the minimum operating pressure of the safety valve.

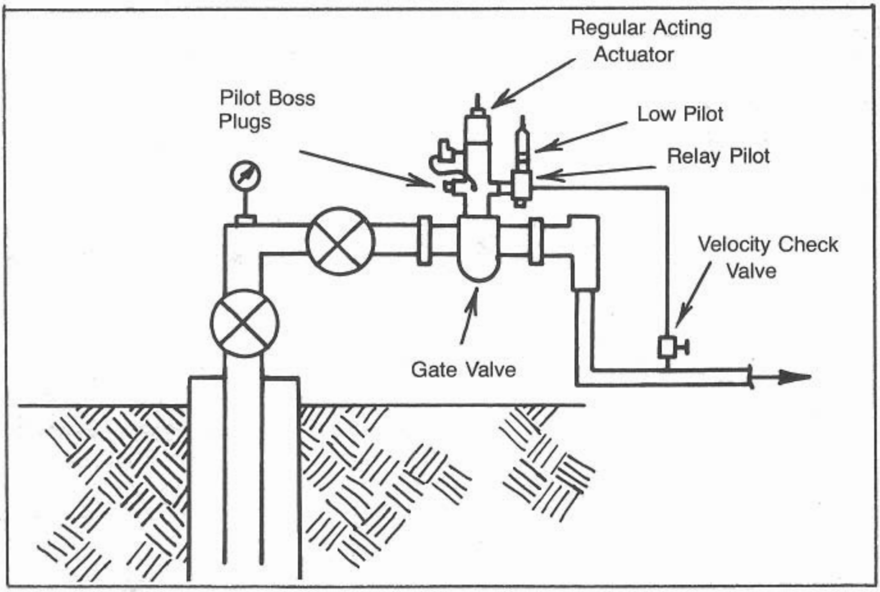

Fig. 16.3 *Remote sensing line pressure controlled system for flowline protection (Solution 2.1)*

Solution 2.1: Use direct acting line pressure powered actuator on a gate valve type SSV with ratio piston relay pilot and low pressure bleed pilots. This type of system remotely senses the lower pressure downstream of the choke and uses the higher pressure upstream of the choke to power the valve closed.

This system could not be used if there was danger of freezing in the small sensing line between the ratio piston relay velocity check (safety protection in case the small line is broken) and the ratio piston relay pilot.

This system does not require clean dry low pressure supply gas. The produced fluid is the control media and provides the power. The pilots will tolerate some contamination but an excess will give continued problems. The system does require exhausting well fluids, so provisions must be made to pipe the exhaust for proper disposal.

Selection of the relay pilot ratio is critical only in that it exceeds the pressure ratios and has a high enough pressure rating. Low pressure pilot selection is made on the basis of pressure range.

Valve body choice would depend upon several factors: what the rest of the tree has, what the preference of the company is, and which valves are most available for the actuator that is most available.

Below are listed the specifications for equipment to be used.

Valve:
Make and model—To match tree, regular acting
Size—2$1/16$-in.
Pressure rating—5,000 psi, to match tree
Service—Standard (sweet, no H_2S)
Trim—Alloy
End connection—Flanged end, 2$1/16$-in., R-24

Fig. 16.3 shows high pressure remote controlled systems with line pressure controlled SSV.

Actuator:
  Regular acting, line pressure powered and controlled
Relay pilot:
  Service—Standard
  Ratio—5:1 or larger
Pilot:
  Service—Standard
  Pressure setting—285 psi (75 to 300 range)
Velocity check:
  Service—Standard
  Pressure rating—Greater than shut-in pressure

Other equipment and supplies include:

- Ring Gasket—2 ea., R-24, carbon steel
- Studs—8 ea., 7/8-9 UNC x 6-in., ASTM A-193 Grade B-7
- Nuts—16 ea., 7/8-9 UNC, ASTM A-194, Grade 1
- Line Pipe—1/4-in. nom. x 25 ft, cut and threaded to fit, for the sensing line and exhaust line
- Unions—1/4-in., 2 ea., 3,000 psi, steel
- Couplings and elbows—6 ea., approximately, 3,000 psi
- Half coupling—1/2-in. NPT (or weld fitting) welded on top side of flow line downstream of the choke.

The flow line will need to be changed 15 in. to allow the addition of the valve body between the wing valve and choke, or between the master valve and tee.

Solution 2.2: The problem is concerned with the minimum operating pressure of the surface safety valves. Minimum operating pressures for safety valves are limited by the line pressure required to close the safety valve.

The same limits are true for the reverse acting SSV with a spring; but if the SSV has a spring closure, minimum operating pressure is determined by the pressure required to hold the valve open against the spring force. The reverse acting SSV with spring closure therefore can be used by either direct control downstream of the choke or by remote control upstream of the choke.

A remotely controlled reverse acting line pressure powered SSV (Fig. 16.4) would have the following specifications to consider:

Valve:
  Make—To match tree, reverse acting.
  Size—2 1/16-in.
  Pressure—500 psi
  Service—Standard
  Material—Alloy, trim
  End connection—Flanged end, R-24 ring joint. (If it were a slab gate valve with floating seat, the flange would need to be drilled and tapped for a velocity check valve.)
Actuator:
  Type—Reverse acting line pressure controlled
  Size—2 1/16-in.
  Pressure rating—500 psi
  Service—Standard
  Bonnet material—Alloy

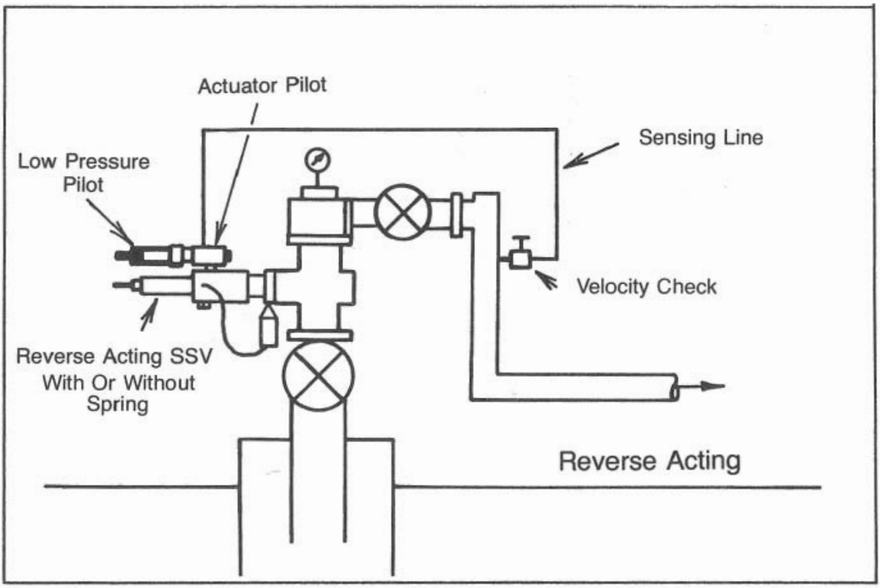

Fig. 16.4 *High pressure remote sensing system with reverse acting actuator for flowline protection (Solution 2.2)*

- Spring—Yes (Not needed for closure because of being upstream of choke, but spring closure is often required by policy.)
- Shock cylinder—No (Low pressure oil well not severe service, and oil being exhausted works as shock absorber)
- Minimum operating pressure of SSV—Must be much less than minimum line pressure

Relay pilot:
- Service—Standard
- Ratio—Greater than the pressure ratio which is 525/300 = 1.75

Low pilot:
- Service—Standard
- Pressure range needed—75 to 300 psi
- Set point—285 psi

Velocity check:
- Service—Standard
- Pressure rating—Greater than shut-in pressure

Fig. 16.4 is a high pressure remote controlled system with reverse acting line pressure powered and controlled SSV.

Other equipment and supplies include:

- Ring gasket—2 ea., R-24, carbon steel

- Studs—8 ea., 7⁄8-9 UNC x 6-in. ASTM A-193 Grade B-7
- Nuts—16 ea., 7⁄8-9 UNC x 6-in. ASTM A-194 Grade 1

Solution 2.3: The direct controlled reverse acting SSV with spring closure has the advantage of simplicity and yet retains the security of fail-safe closure regardless of flow line pressure. The safety valve should be located close to the choke to provide maximum protection.

Since the valve is thru-conduit, there is no problem with impingement erosion due to turbulence from the choke.

Equipment specifications are:

Valve body:
  Make & model—To match tree, reverse acting
  Size—2 1⁄16 in.
  Pressure rating—3,000 psi (5000 psi may be used, but is not needed due to pressures involved)
  Service—Standard
  Material—Alloy, trim
  End connection—Flanged end, R-24 ring joint (If it is a slab gate valve, the flange would need to be drilled and tapped for the velocity check valve.)
Actuator:
  Type—Reverse acting line pressure controlled
  Size—2 1⁄16 in.
  Pressure—3,000 psi
  Service—Standard
  Bonnet material—Alloy
  Spring—Yes
  Shock cylinder—No
  Minimum operating pressure—Less than minimum flowing pressure to prevent valve from drifting to the closed position due to the spring force

Fig. 16.5 represents a direct controlled system with SSV with spring

Low pilot:
  Service—Standard
  Pressure range needed—75 to 300 psi
  Set point—285 psi

Other equipment includes:

- Ring gasket—2 ea., R-24, carbon steel
- Studs—8 ea., 7⁄8-9 UNC x 6 in., ASTM A-193 Grade B-7
- Nuts—16 ea., 7⁄8-9 UNC, ASTM A-194 Grade 1
- Line Pipe—1⁄4-in: nom. 10 ft to pipe exhaust
- Elbow—2 ea., 3000 psi, 1⁄4-in. NPT

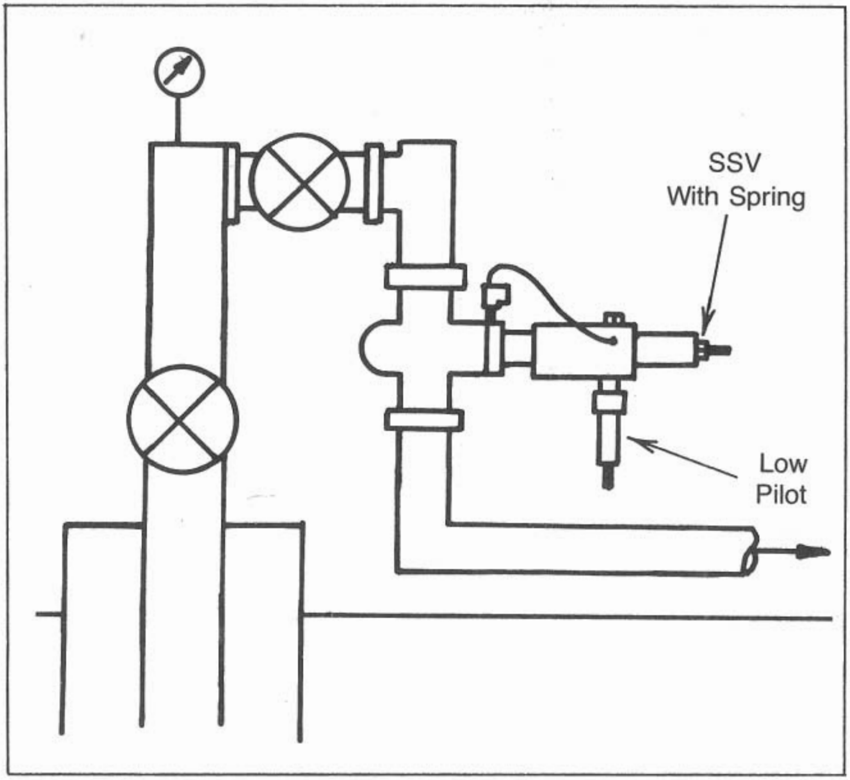

Fig. 16.5 *Direct controlled actuated reverse acting gate valve SSV for flowline protection (Solution 2.3)*

Problem 3: Fig. 16.6 shows a new oil well and the process train. The problem is to design a safety system to protect it. The system will be installed when the surface equipment is installed. The location is on land about ½ mile from the field gathering center. Produced fluids have very little sand and CO_2, and no H_2S.

Solution 3.1: A safety system for the single oilwell is shown in Fig. 16.7. The surface safety valve is a pneumatic reverse acting actuator on the upper master valve of the tree. It is controlled by pressure sensing pilots on the flow line, separator, and flash separator, and level sensors on the production and flash separators.

The flow line pressure sensor detects failures of the flow line between the choke and check valve. High-low pressure sensors on the separators or adjacent piping protect against overpressure of the vessels; and, if failure does occur, the well is shut in to reduce further hazard.

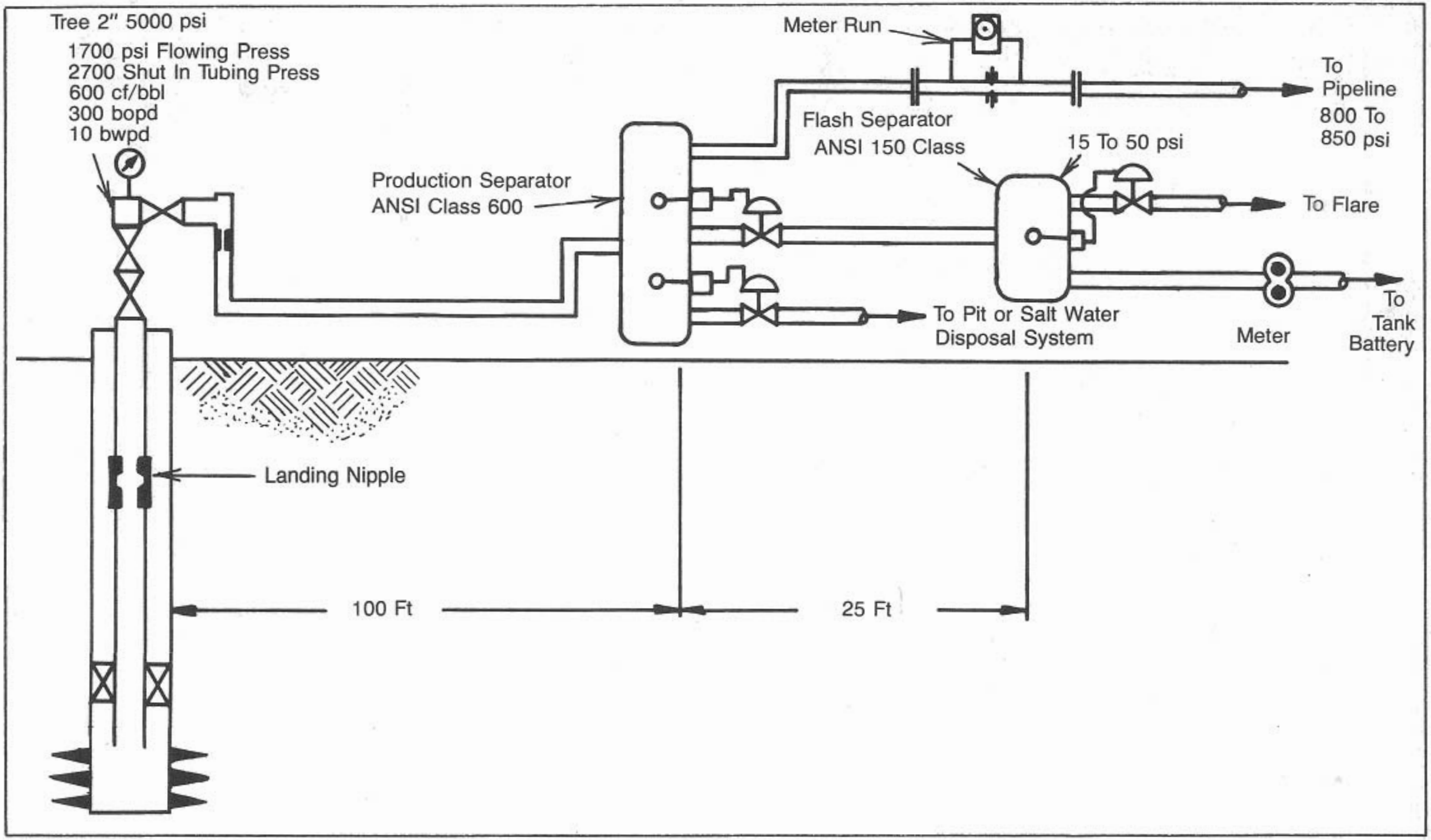

Fig. 16.6 *Oilwell and process train requiring safety system (Problem 3)*

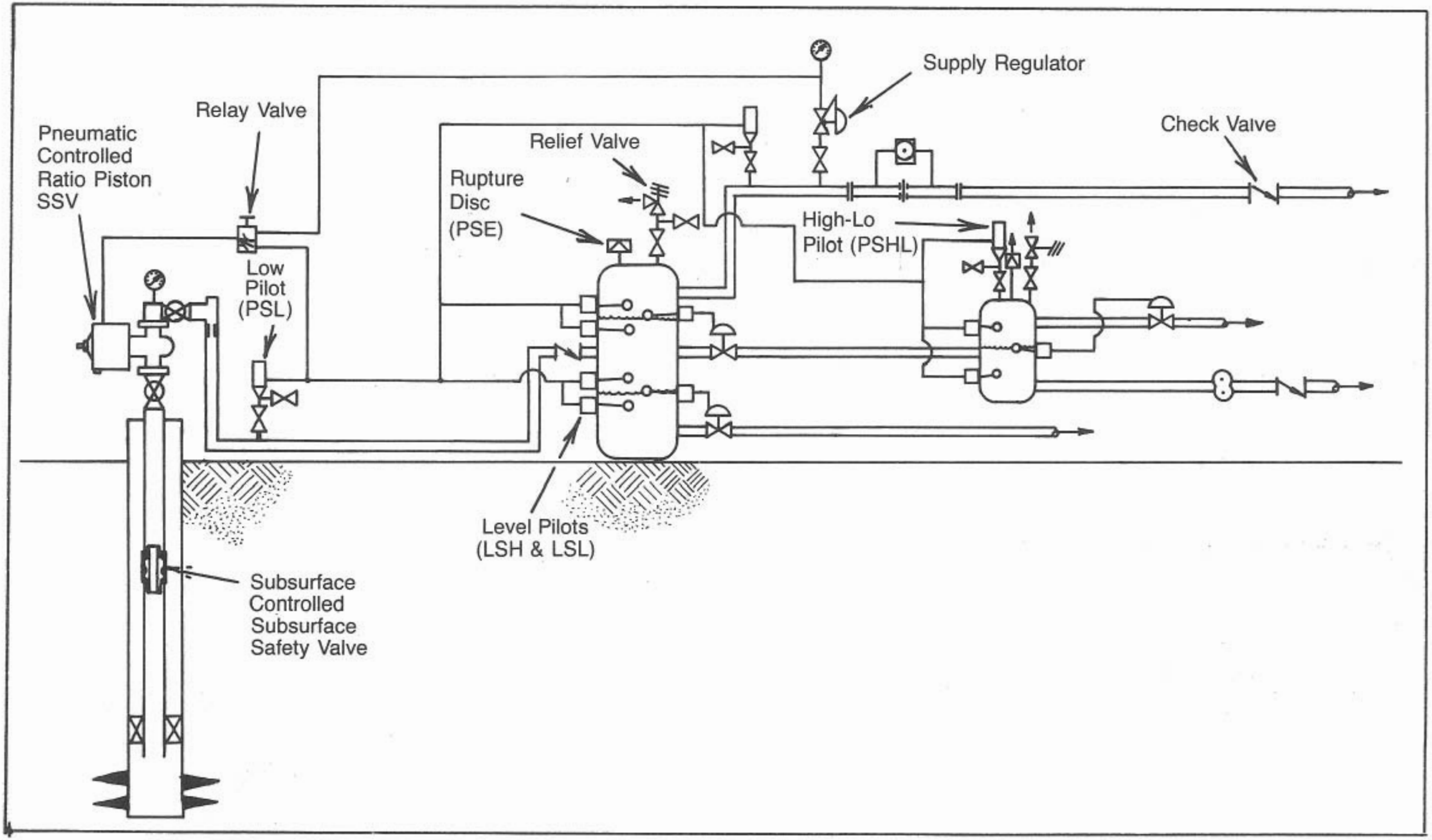

Fig. 16.7 *Safety system for oilwell and process train (Solution 3.1)*

Level sensors on the separators are for preventing contamination of the downstream systems in case the primary control system malfunctions.

All the monitor pilots (sensors) are connected to a common pilot line controlling a single-pressure relay which controls the surface safety valve. The system is powered by produced gas taken from the top of the production separator, or from the gas line from the separator through a regulator.

The regulator, pressure monitor pilots, and relief valves are installed with isolation valves for testing and maintenance.

Piping of the control system can be done with standard threaded and coupled pipe or tubing and fittings. For illustration purposes this solution will use ⅜-in. OD tubing and fittings.

Check valves (FSV), relief valves (PSV), and rupture discs (PSE) are parts of the total safety system. Selection and sizing of these components are usually the function of the pressure vessel and piping designer and will not be considered here.

Generally, relief devices are sized to exhaust pressure faster than the input so that pressure will not rise above the working pressure of the vessel. ASME Pressure Vessel Code (Section VIII) and API RP-520 and RP-521 should be consulted.

The subsurface safety valve chosen for this solution is a direct controlled type. The most reliable type is surface controlled so any of several parameters can be sensed to shut in the well. The remote controlled type is not sensitive to changing well conditions. Direct controlled valves are very reliable when properly applied and flow can exceed the present limit of the valve.

Specifications for equipment needed includes:

Valve:
- Make to match tree, reverse acting
- Size—2$\frac{1}{16}$ in.
- Working pressure—5,000 psi
- Service—Standard
- Material—Alloy, trim
- End connections—Flanged end, R-24

Actuator:
- Reverse acting ratio piston pneumatically controlled (large ratio)
- Ratio—74:1 (Minimum ratio required = 2700 x 2 − 150 = 36:1 for actuator assuming maximum supply pressure is 150 psi)
- Bonnet material—Alloy
- Service—Standard

Relay Valve:
  Type—Bleed
  Pressure rating—40 psi low, 200 psi max
  Service—Standard
Regulator:
  Type—Pressure regulator
  Port size—¼-in. N.P.T.
  Primary pressure range—1,500 psi max
  Secondary pressure range—150 psi max
  Secondary pressure setting = 75 psi (Pressure in cylinder = 2 x pressure in valve ÷ ratio = 2 x 2700/74 = 73 psi). This is more than the relay valve actuation pressure, so the relay valve is not the minimum limit. Maximum limit is 150 psi for actuator, 200 psi for the relay, and 150 for pressure monitor pilots. It is better to set system pressure near minimum for better pilot operation.
  Materials—Corrosion resistant to salt water entrained in produced gas, and methane
  Valve—Relieving
  Capacity—Not critical; should be large enough to reduce freezing problems
  Gages—With outlet pressure gage

Pressure monitor pilots for flow line and production separator (PSHL) have the same pressure settings since they operate at essentially the same pressure. The check valve separating the two sections of the flow stream requires two pilots.

Pilot selection:
  Type—Monitor
  Sensing—High and low pressure
  Valving—Bleed
  Service—Standard
  Pressure setting—720 psi low (10% below 800 per OCS order), 935 psi high (10% above 850 but less than 1,700 psi flowing pressure)
  Plunger size and spring combination selection should be made for greater sensitivity in the normally operative range.

As an alternate to the combination high-low pilot, two single function pilots may be used. The high only/low pilots used in pairs are good choices. Pilots which are only high or low pressure sensing usually have a high degree of design commonality. Differences may exist only in connection methods.

The two pilots are each easier to maintain than one, but two usually cost more and have more failure sources, thus complicating the system.

Pressure monitor pilot for flash separator (PSHL). This vessel is for separating the gas which is liquid or dissolved in the oil at the production separator pressure, and which evaporates or comes out of solution at the oil line pressure.

Since there is very little of this gas, it may be flared. If there were enough gas to warrant the capital expenditure, the gas would be recompressed and sold.

Pilot selection:

Pilot type—Monitor
Sensing—High and low pressures
Valving—Bleed
Service—Standard
Flowing pressure range—15 to 50 psi
Pressure settings—Low 13 psi (15% less than 15 psi), and high 100 psi (less than maximum working pressure of ANSI Class 150 vessel, which may be 195 to 285 psi depending upon material used.)

Alternate to the combination high-low pilot is a pair of high only-low only pilots (PSH & PSL).

Subsurface valve selection is a system selection. For the purposes of this solution it will be assumed that a landing nipple is run with the tubing along with a flow coupling above. The wireline retrievable package would include:

- Nipple—2.375-in. OD tubing x 1.875-in. bore key type landing nipple
- Lock mandrel—1.875-in. OD x 1.000-in. ID × 1.375-in. fish neck equalizing valve
- Safety valve—1.75-in. OD x 0.75-in. ID

Closing adjustments of bean and spacers to be made according to computer calculations based on extensive well data.

Detailed liquid level pilot (LSHL) selection is beyond the scope of this book except for the following considerations:

Service—Standard
Working pressure—vessel working pressure
Valving—bleed, .08" minimum equivalent diameter, min.
Working pressure of control gas—150 psi

Other equipment and supplies include:

Tubing:

⅜-in. OD, x 0.049-in. wall x 500 ft stainless

Tube fittings:

—¼-in. male pipe thread x ⅜in. OD tube, stainless, ferrule type, straight, 12 ea.

—Tee of ⅜-in. tube, stainless, 8 ea.

Gage or needle valve:

—¼-in. NPT, male-female, carbon or alloy steel, 1,500 psi working pressure minimum, 3 ea., (bleed valve at pilot.)

—½-in. NPT male-female, straight flow, carbon or alloy steel, 1,500 psi working pressure minimum, 3 ea. (isolation for pilots)

Pipe bushing:

½-in. x ¼-in. NPT, steel (at the actuator)

Auxillary equipment for installation and maintenance includes:

Opening jack:

Type—Mechanical, to fit actuator thread and have a stroke sufficient for the actuator to insure full movement of valve

Load capacity—Minimum = 2 x maximum test pressure × lower stem area.

Load output—Minimum = 2 x maximum shut-in pressure × lower stem area.

Test pump assembly for setting pilots consisting of:

Pump—hand; with reservoir; 10,000 psi

Gage—10,000 psi, ¼% accuracy, ½-in. NPT, bottom connection

Hose—¼-in. ID x 3 ft, with swivel fittings, ¼-in. NPT

Pipe tee—10,000 psi; ¼-in. NPT female

Nipple—¼-in. NPT x 4-in., schedule 160

Problem 4: High pressure gas wells have the added problems of freezing due to gas expansion and higher control pressure. Fig. 16.8 shows the new well and lease equipment that is to be protected by a safety system.

The problem is set up as a single well, to reduce the complications involved in consolidating the flows of several wells in the process train. Several conditions and concerns that become a part of the problem include:

1. A nipple was run in the 2⅜-in. OD, 4.7 lb/ft, N-80 tubing for a surface controlled subsurface safety valve to be installed by wireline methods.

2. There is concern that the packer may leak and overpressure the tubing casing annulus. It is desired to maintain annulus pressure at less than 2,000 psi by periodically bleeding down any accumulated pressure. It is desired not to bleed continuously.

3. The high CO_2 content, along with water, makes the well fluids corrosive. To reduce the hazard, the tree components (valves, choke, cross, etc.) have bodies of 12% chromium stainless steel (AISI 410 or ASTM A-351 Grade CA-15)

4. The subsurface valve is to close if there is a fire or vessel rupture. The surface safety valve is to close if there is a fire or rupture, too, or if

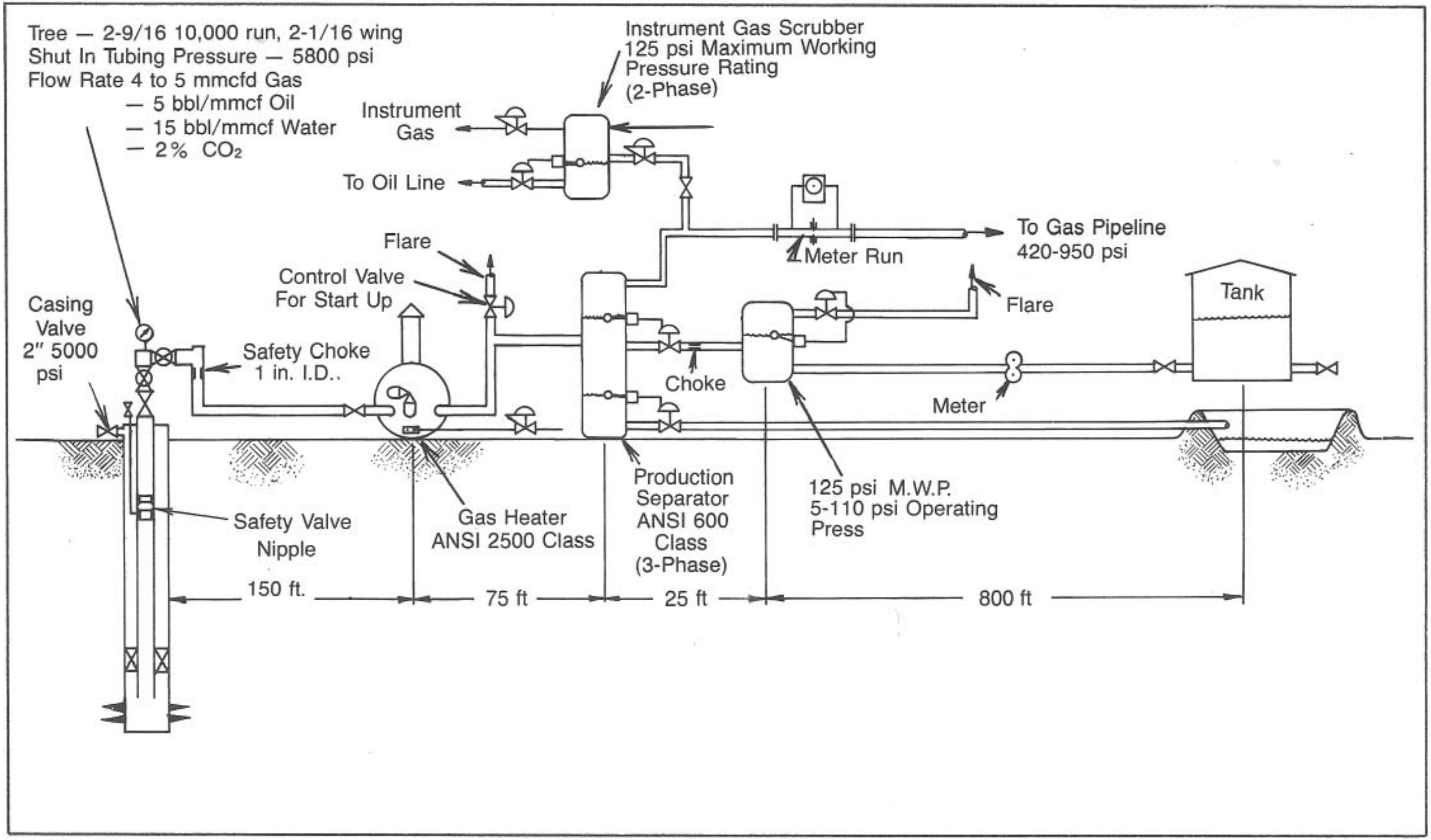

Fig. 16.8 *Single gas well (Problem 4)*

there is a high pressure or level alarm. Casing relief operates independently of the other two. Fuel gas shuts off if the SSV closes.

Fig. 16.9 is a safety system for the high pressure gas well installation (Solution 4.1). Fig. 16.10 is a simplified schematic of the control circuit for Problem 4.

Solution 4.1: This problem is relatively complex because of the three safety valves, multiple control circuits, hierarchy of logic, fire protection, multiple supply pressures, and concern for freezing. Because of this complexity the solution explanation will be divided into two sections.

1. Check valves (FSV) in flow train are placed on the gas sales flow line as it leaves the lease or as it enters the sales pipeline, depending upon the distances; on the flow line into the storage tank; and on the flow line leading into the gas heater to prevent backflow in case of pressure vessel rupture upstream.

The specifications for these valves is outside the scope of this solution except that sizing, pressure rating, and end connections will be consistent with the piping in which they are installed.

2. High and low level sensing pilots are installed on the production separator, flash separator, and instrument gas scrubber to prevent the wrong fluids from entering the flow lines if there is a malfunction in the primary controls. A high level sensing pilot is on the storage tank to prevent overflow.

These level sensors must be capable of operating at the maximum working pressure of the vessel on which they are installed. They should be installed or adjusted so that there will be a long enough lead time between sensing that something is wrong and having the well quit flowing, in order to prevent overflow.

3. The tank will need a relief or vent to prevent rupture or collapse during filling or emptying operations.

4. The three separator vessels, which are at different pressures, must all be fitted with relief valves (PSV) and/or rupture discs (PSE) as secondary protection from overpressure. These devices are to be sized and set according to ASME Pressure Vessel Code (Section VIII) and API RP-520, and the heater will be protected from over and under pressure by the flow line pressure sensors.

Temperature and ignition protection is to be provided by the following items which are normally supplied by the vessel manufacturer. The sensors will shut off fuel supply and shut in only the surface safety valve.

- Stack spark arrestor to prevent a spark from igniting any combustible gas mixture in the area.

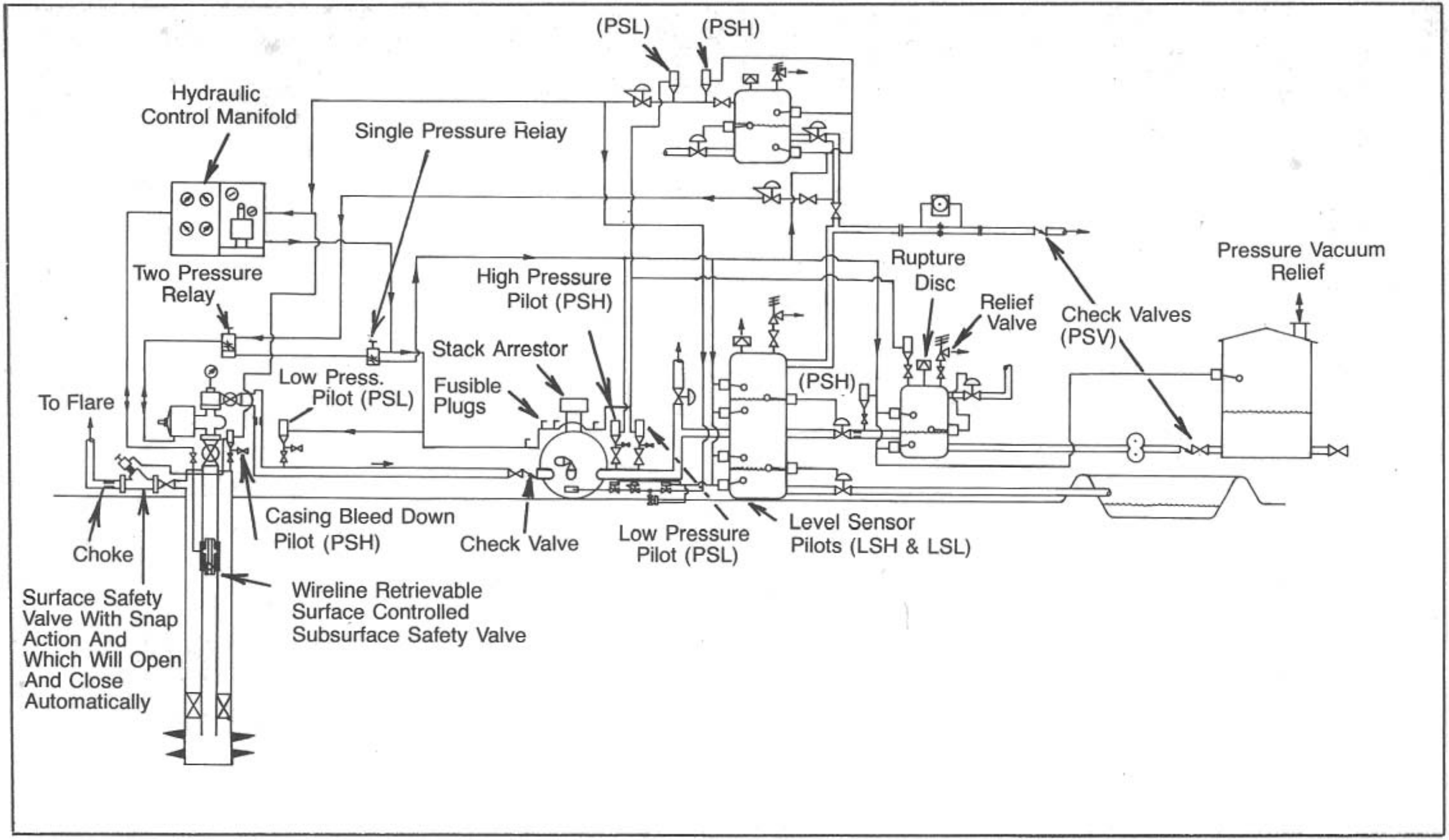

Fig. 16.9 *Safety system for high pressure gas well (Solution 4)*

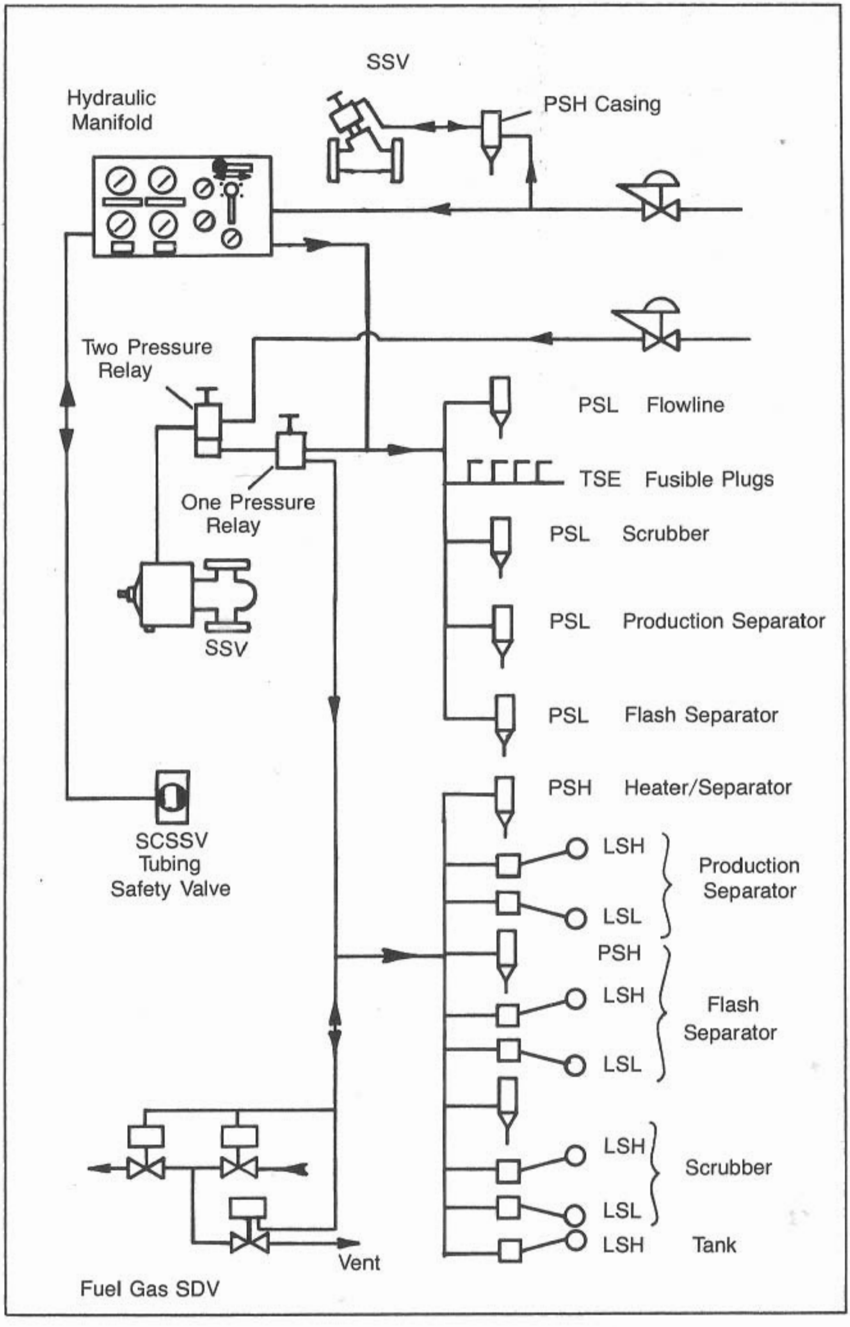

Fig. 16.10 *Simplified schematic of control circuit (Solution 4.1)*

- Flame arrestor on the air inlet to prevent the flame from migrating back out.
- Burner flame detector (BSL) or low temperature sensor (TSL) to shut off fuel if flame goes out in order to prevent accumulation of gas that could explode.
- Double shut-off valves plus vent valve between them to prevent leaky shut-off valve from causing gas accumulation that could explode.
- High temperature sensors for the stack and for the outlets of the heated gas to insure against overheating which could weaken the tubes to cause rupture. If the heater is indirectly fired and the heat transfer media can be ruined by heat, a high temperature sensor must sense this. A high temperature sensor at the air intake on a natural draft burner will detect migration of the flame back into the intake. All these sensors will shut off fuel and close the surface safety valve to halt production.

5. A fusible plug shall be located in the area of the flame arrestor of the heater. Plus, at least two (since the heater is assumed to be less than 48-in. OD) must be used for each 5 ft of length (Total = 5). (See API RP 14C).

Temperature used is 203 °F. This is the most common temperature used. There is no exact method of determining what temperature to use. The piping in hot climates can exceed 117 °F. and 136 °F. from the sun's radiation alone. If there is significant heat coming from the heater the temperature easily could exceed 158°. If too high a temperature melting point is used, the time for reaction to a fire gets longer.

Body material is malleable iron and steel and size is ¼-in. NPT.

6. The low pressure pilot on the flow line between the well and the heater is for closing the well in the event of flow line or heater rupture upstream of the pressure reducing choke which is between passes through the heater.

The flow line must be capable of holding full well shut-in pressure, so no relief valve or high pressure sensor is required. Shut-in tubing pressure is 5,800 psi and the temperature can reach 200 °F., according to the logic of the fusible plug choice.

ANSI Class 2500 equipment is rated for up to 6,250 psi @ 200 °F. depending upon the materials used (It could be as low as 3615.)

In any case, the equipment must be capable of sustaining the maximum well pressure at the actual operating temperature.

The pilot must also be capable of sustaining the pressure and actuating at 10% below the lowest operating pressure in the flow line.

There will be some pressure drop through the safety choke and some due to flow through the cross and piping. In winter there may be additional pressure drop due to hydrates freezing and causing partial plugging. The pressure drop through the safety choke may be as much as 400 psi.

For purposes of this solution and because these calculations are outside the scope of this book, the flow line pressure will be assumed to be 500 psi less than the minimum flowing tubing pressure of 4,500 psi, or 4,000 psi. The pilot setting should not be less than this minimum pressure. Use 3600 psi.

The specifications for this pilot are:
Type—Monitor
Sensing—Low pressure
Valving—Bleed
Service—Standard

7. The high pressure sensing pilot on the flow line downstream of the heater should be placed as close as possible to the heater to protect against pressure buildup in the case of freezing due to the heater not working well. It also would protect the production separator and piping due to a valve closing or other plugging downstream.

The pressure in the system downstream of the heater is very close to the gas sales line pressure of 420 to 950 psi. API RP-14E recommends a maximum of 1.2 psi per 100 ft of pipe, so there should be less than about 15 psi at the highest flow rate, or 965 psi at the heater.

ANSI 600 Class working pressures range from 1,030 to 1,500 psi, but for the purposes of this solution we will assume the system pressure to be 1,125 psi maximum working pressure (material group 1.5 at 200 °F. per ANSI B16.5 1973).

The maximum operating pressure is therefore 14% below the maximum working pressure($(1125 - 965) \times 100 \div 1125$). The setting of the pilot should split the difference or be a little less to compensate for inconsistency of the pilot.

The specifications on the high pressure pilot are:
Type—Monitor
Sensing—High pressure
Valving—Bleed
Service—Standard
Pressure setting—1040

8. The low pressure pilot on the production separator should be set not lower than 15% below the minimum operating pressure, 420 psi.

The pilot is to shut the well in if there is a rupture of the pressure vessel or associated piping.

Specifications for this pilot are:

Type—Monitor
Sensing—Low pressure
Valving—Bleed
Service—Standard
Pressure setting—357 psi

9. The surface safety valve design controls, to some extent, the design of much of the rest of the installation. The rest of the tree determines which SSV to use. The tree is a 2⁹⁄₁₆-in., 10,000 psi working pressure tree. For consistency the same make and model valve body normally would be used for the surface safety valve.

Presumably, with 2% carbon dioxide and water in the flow stream, the body material would be 12% chromium stainless steel (AISI 410 or ASTM CA-15) and the gates and seats would be stainless and perhaps overlaid with hardfacing to reduce the corrosion damage rate.

If it were decided to use alloy steel for body material for the rest of the tree in order to reduce initial cost, the safety valve body and bonnet material should be alloy.

Since it is desirable to keep control system pressure below 150 psi for the monitor pilot, the preferable ratio of the actuator would be greater than 78:1 (5800 x 2 ÷ 150). But if the standard ratio for a 2 ⁹⁄₁₆-in., 10,000 psi valve actuator is 53:1, for example, supply pressure must exceed 220 psi (5800 x 2 ÷ 53), which is more than the scrubber can supply (125 psi).

This causes the choice for the two-pressure system, taking gas from upstream of the instrument gas scrubber, and living with the additional entrained liquids.

The SSV specifications are:

Valve body:
  Make and model—To match tree, reverse acting
  Size—2 ⁹⁄₁₆ in.
  Working pressure—10,000 psi
  Material—Stainless body and internals, trim
  End connections—Flanged end, BX-153
  Service—Standard
Actuator:
  Type—Pneumatically powered ratio piston, for reverse acting gate valve
  Bonnet material—Stainless
  Service—Standard
  Ratio—Approximately 53:1

10. The hydraulic control manifold supplies hydraulic control pressure to the subsurface safety valve to open it and hold it open. The unit is powered by gas from the instrument gas scrubber. This gas also is used for the control supply to the pilot system.

The hydraulic pressure required by the safety valve is approximately 1,000 psi more than the shut-in tubing pressure (5,800 psi), or 6,800 psi. This means that 600 psi hydraulic pressure output is not enough. The next step up is 10,000 psi.

The volume needed to open the one safety valve, with ¼-in. OD control line, is very small (10 to 20 cu in.), so only a single well small pump manifold is required. The ratio of the pump for such a manifold is 110:1, so supply pressure for the pump needs to be at least 62 psi (6,800/110). This is less than the 100 psi maximum rating for the pilot line pressure, so the maximum supply pressure needed would be 100 psi from the instrument supply gas scrubber, which has a 125 psi maximum working pressure.

Manifolds come with one pump for price, or two pumps for reliability through redundancy and maintenance without interrupted production. Another choice is with or without manual pump; or manual override for the pneumatically powered pump.

Since the pneumatic power supply is downstream of the safety valve, there is no supply pressure available for reopening if the process train is depressured after shut-in. A manual pump therefore is desirable in this case. Likewise a manual override on the control valve is needed.

Specifications for the manifold (Fig. 16.11) include:

Maximum hydraulic pressure—10,000 psi
Supply pressure—100 to 400 psi
Hydraulic outlets—1
Pilot line pressure—40 to 100 psi
Manual pump—1, as manual override on pneumatic pump, or separate
Pneumatic pump—2 ea. ratio piston with manual override
Service—Standard
Reservoir capacity—4 gal
Manual override—screw knob on relay valve

11. The flash separator is operating at just enough pressure to push the produced oil into the tank. This will vary between 5 psi and 110 psi. The maximum working pressure is 125 psi. Since there is such a difference between what happens on low and what happens on high, there must be two pilots. These are described as:

	(PSL)	(PSH)
Type:	Monitor	Monitor
Sensing:	Low pressure	High pressure

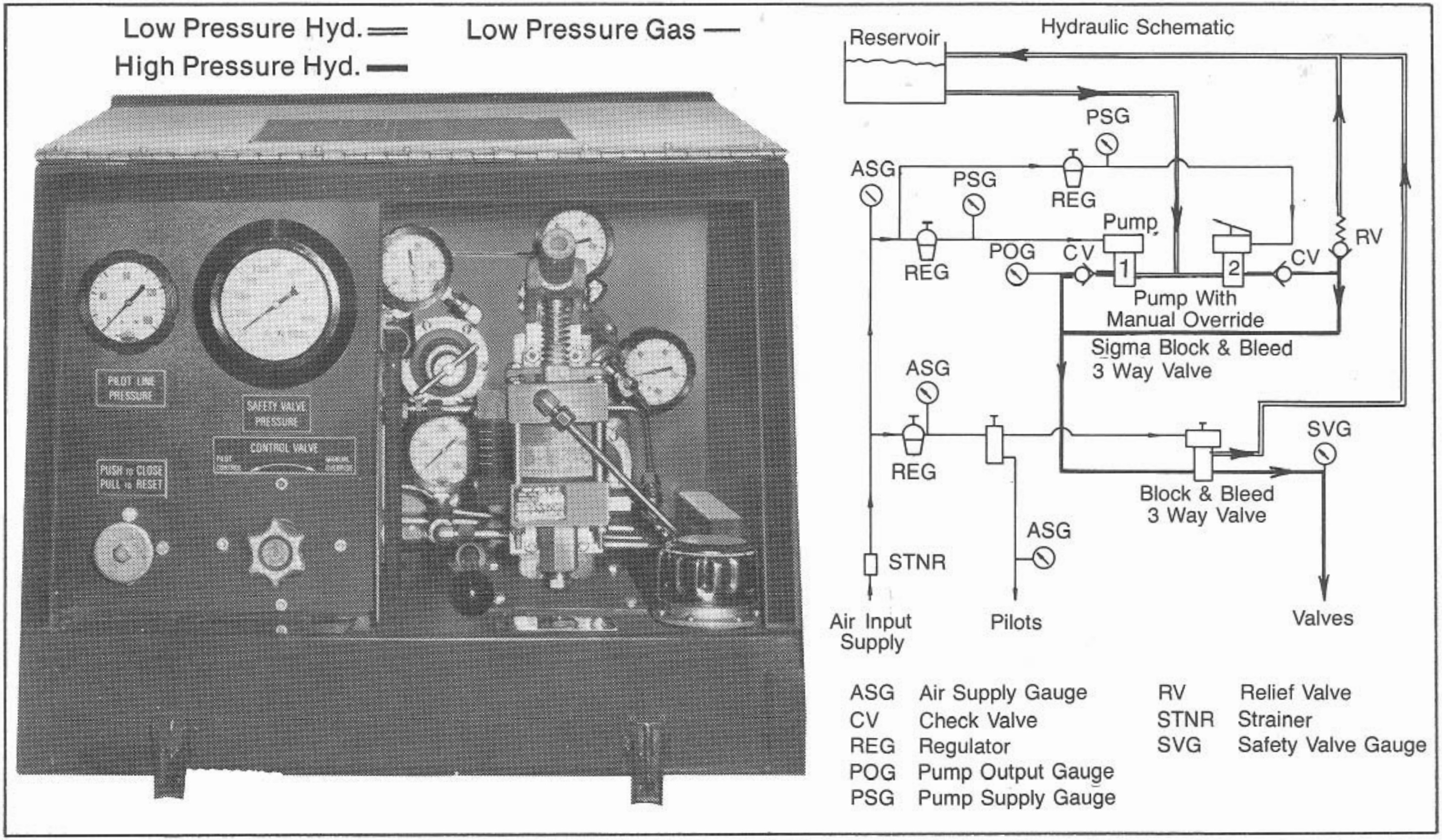

Fig. 16.11 *Hydraulic manifold data (Problem 4)*

Valving:	Bleed	Bleed
Service:	Standard	Standard
Pressure setting:	5 psi	110 psi

12. The instrument gas scrubber has basically the same problem as the flash separator except that the pressures can be handled by a similar pilot with the same part number. These two pilots are:

	(PSL)	(PSH)
Type:	Monitor	Monitor
Sensing:	Low pressure	High pressure
Valving:	Bleed	Bleed
Service:	Standard	Standard
Pressure setting:	70 psi	110 psi

Minimum supply pressure required to open the well is the 62 psi for the pump (see item 10). Under flowing conditions only 49 psi (5400/110) is needed to hold the safety valve open. As much as 225 psi is needed to operate the SSV, but that is supplied through a different source.

13. The relay valving circuit uses the pilot line pressure from the hydraulic manifold to control the surface safety valve relay, which is controlling the higher pressure required by the SSV. Thus, if the fusible plugs or low pressure pilots actuate, the manifold will cause the subsurface valve to close. Pressure will be bled backwards through the single pressure relay to actuate the two-pressure relay controlling the SSV by releasing the pressure being applied to the piston. Both will close, but if a level control or high pressure pilot actuates, only the surface safety valve will close.

To reopen, the relay for the partial shutdown must first be reset. This means the subsurface valve is opened first. Then the SSV can be opened. This helps insure longer downhole valve life.

The specifications of these two relays include:

Type:	One-pressure	Two-pressure
Relay valve:	Poppet 3-way	Poppet 3-way
Signal:	Bleed from orifice in relay	Applied to piston in relay
Valve working range:	40 to 200 psi	50 to 350 psi
Pilot line pressure range:	40 to 200 psi	18 to 35 psi
Material:	Stainless	Stainless
Service:	Standard	Standard

14. Casing bleed down is accomplished with a compact, snap acting, auto re-opening surface safety valve. The SSV is controlled by a high

pressure pilot which as a large deadband between actuation and reset. The valving is designed to bleed off pressure when the sensed pressure decreases below a preset value, and apply pressure when the sensed pressure rises above a preset value. This is the way a regular low pilot works.

Care must be taken that the pressure in the valve body does not go below 100 psi, at which pressure the valve may not close. If the SSV is spring load opened, and closed by pressure, it will be necessary to insure that there will be pressure in the valve during bleed down.

There should be a restriction in the line from the safety valve to the flare or pit. This restriction should be equivalent to less than 25% of the flow area through the safety valve. The sensing pilot should be placed so that it will be affected very little by the pressure drop due to flow. The setting of the pilot also should be made to assure a margin of safety.

The requirements of the problem state that casing pressure is not to exceed 2,000 psi. If the safety valve pressure must not be less than 100 psi, deadband range should be 1,900 psi. Four casing bleed pilots available have these ranges.

Pilot	*Max high setting, psi*	*Deadband range, psi*
1	634	53 to 140
2	2128	120 to 320
3	5344	305 to 800
4	7744	610 to 1600

None cover the entire range so a compromise must be made. It would be better not to have the valve operate very often, so a large deadband is an advantage. The No. 4 pilot seems to be the best choice.

Specifications for the casing bleed down system include:

Valve:

Type—Auto reopen, line pressure powered, pneumatically controlled
Service—Standard
Body material—Alloy
End connections—Flanged end, R-24
Maximum operating pressure—5,000 psi
Minimum operating pressure—100 psi
Bore—Approximately 1-in. equivalent flow area minimum. Does not need to be thru-conduit.

Actuator pilot:

Service—Standard

Piston pressure—35 to 100 psi = (Valve pressure ÷ 150) + 20 psi. This determines the minimum control system pressure.

Monitor pilot:
 Type—Casing bleed monitor
 Service—Standard
 Sensing—High pressure
 Valving—Block and bleed
 Maximum high setting—7744 psi
 Deadband—61 to 1600 psi
 Setting—1800 psi high, 300 psi reset

Piping downstream:
 Flange—2-in. 5,000 psi x 1-in. nominal NPT
 Piping—1-in. nom. NPT Schedule 160 (0.815-in. ID) to flare (20 ft minimum length) This is larger than the ½-in. mentioned earlier, but the length increases the restriction to a diameter equivalent of less than ½ in. Thus the bleed down time is kept approximately the same for maintaining pilot sensitivity.

15. Other supplies and equipment required include:

Regulator for SSV supply:
 Primary pressure—1,500 psi maximum
 Secondary pressure range—0 to 250 psi
 Secondary pressure setting—230 psi
 Capacity—not a problem with one SV

Regulator for pilot system supply:
 Primary pressure—125 psi
 Secondary pressure range—0 to 125 psi
 Secondary pressure setting—100 psi
 Capacity—19 scfm (required by pump in manifold)

Opening jack for surface safety valve:
 Load capacity required = Area of SV lower stem × test pressure
 Load output required = Area of SV lower stem × 2 × shut-in tubing pressure. This may be very close to the maximum output rating of a mechanical jack with a 20-in. OD handwheel. Since the capacity is within the range, a mechanical jack could be used. The capacity rating of the mechanical/(hydraulic jack might be exceeded by a slight margin but well within the output range. The hydraulic jack would have an output rating well in excess of the needs. The choice comes down to a safe choice for the hydraulic jack or a choice that requires the operator to exert an extra physical effort and use a mechanical jack. The choice is mostly one of convenience or ease of operation.

Isolation valves for pressure pilots:
 Size—½-in. NPT male-female
 Working pressure—10,000 psi or 6000 psi except for flow line pilot

Type—Gage or needle
Material—Alloy steel or carbon steel
Quantity—9 ea.

Bleed valve for pressure pilots:
Size—¼-in. NPT male
Working pressure—10,000 psi or 6,000 psi except for flow line valve.
Type—Gage or needle
Material—Alloy steel or carbon steel
Quanity—9 ea.

Piping:
Can be tubing or pipe. Over 2500 ft will be required to hook up the system. The only high pressure consideration is with the hydraulic control line between the manifold and the wellhead. This will require a 10,000 psi capability. Special care must be exercised to be sure that the line to the storage tank level sensor is large enough. Otherwise intermediate relays will be required. Sizing can be done for optimum bleed down time with computer analysis, if needed, but the system must be tested for reliable operation when installed.

A pressure testing manifold for setting the pressure pilots:
The pump used for the hydraulic jack can be used for testing the pilots if provided with ¼% accuracy test gages and the proper connection fittings.

Problem 5: One of the problems affecting safety in an oilfield is hydrogen sulfide. It is very poisonous, and highly corrosive, in combination with carbon dioxide and water.

Often a field will produce directly into a plant which will remove the H_2S from the gas or crude (sweeten it) for sale to the pipeline. For this reason the flow line may be long.

This problem concerns one well in a field which is producing into a plant 1.5 miles away (Fig. 16.12). The well is in open wooded pasture land in Texas. To power the safety system a ½-in. pipeline was run from the plant to provide compressed air to the wells. The flow line is a 4-in. Schedule 160 welded line. It is intended that sensors detect breaks or leaks in the equipment and shut the well in. There should be remote manual shut-in stations and capability for remote shut-in at the plant.

Solution 5: In addition to the normal concern for safety of people and equipment, Texas requires compliance with Rule 36 of the General Conservation Rules if there is the possibility of the release of hydrogen sulfide gas in concentrations exceeding 100 parts per million (0.01%).

In the text of the rule, the minimum radius of escape is defined for reduction of concentration to the 100 ppm or 500 ppm level. The formula calculating this "safe" radius is:

$$X = [(1.589)\ (\text{mole fraction } H_2S)\ (Q)]^{(0.6258)}$$

Where X = radius of exposure,
Q = maximum volume available for escape, cu ft/day

For this problem:

$$X = (1.589 \times 0.02 \times 8{,}000{,}000)^{(.6258)}$$
$$= 2413 \text{ ft}$$

This means that manual shutdown stations must be located at least 2,413 ft away from the well in four directions so that someone can go up wind to a shutdown station in case of an emergency.

Since hydrogen sulfide soon ruins the sense of smell, one's nose is not dependable for continued monitoring of H_2S presence. Instruments should be used to monitor. They can be purchased with four sensors which can be placed in different directions from the source.

Selection of this equipment is outside the scope of this book, but it should be noted that these are electronic devices and need electrical power. They can be integrated into the pneumatic control system with a solenoid valve as shown in Chapter 12.

Two surface safety valves are incorporated in the system. One is in the upper master valve of the tree and one is located in the flow line just before the flow line enters the plant. Both are controlled by pressure sensing pilots on the flow line and will actuate if pressures are higher or lower than the preset range.

Rupture of the flow line will cause a drop in pressure. Plugging of the flow line, by freezing or closure of a downstream valve, will cause the pressure to rise. In either case the abnormal conditions will be sensed by the pilots and close the safety valve. The check valve downstream of the flow line safety valve helps insure that backflow from the header will not mask the effect of the rupture.

The purpose of the pilot at the downstream end of the line is to detect more positively a break near that end of the line. The downstream pilot controls a relay valve which bleeds down the supply line to the well.

When the pressure in the relay at the well reaches the safety actuation pressure (40 psi), the relay actuates and quickly closes the surface safety valve on the tree.

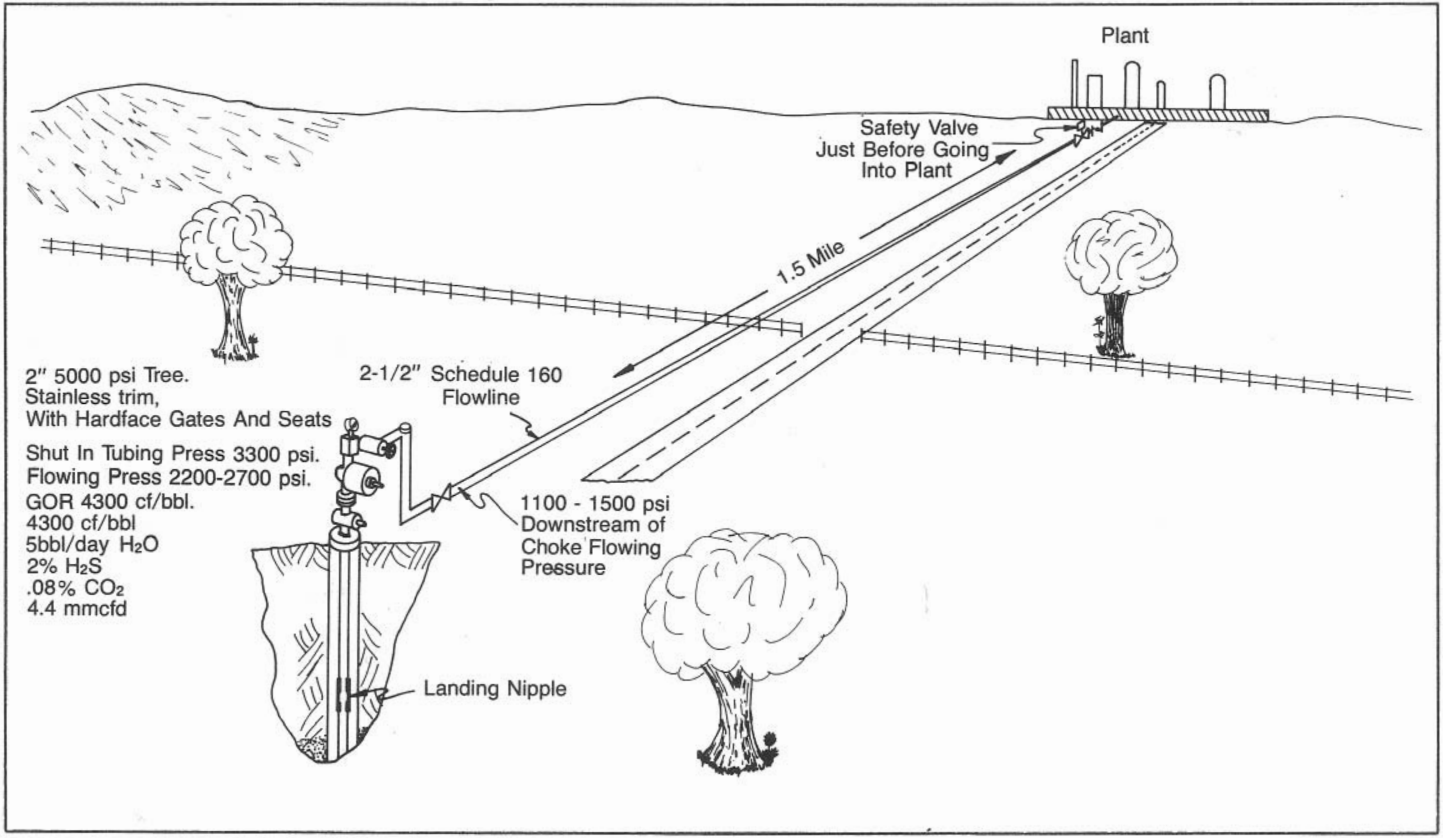

Fig. 16.12 *Sour gas well (Problem 5)*

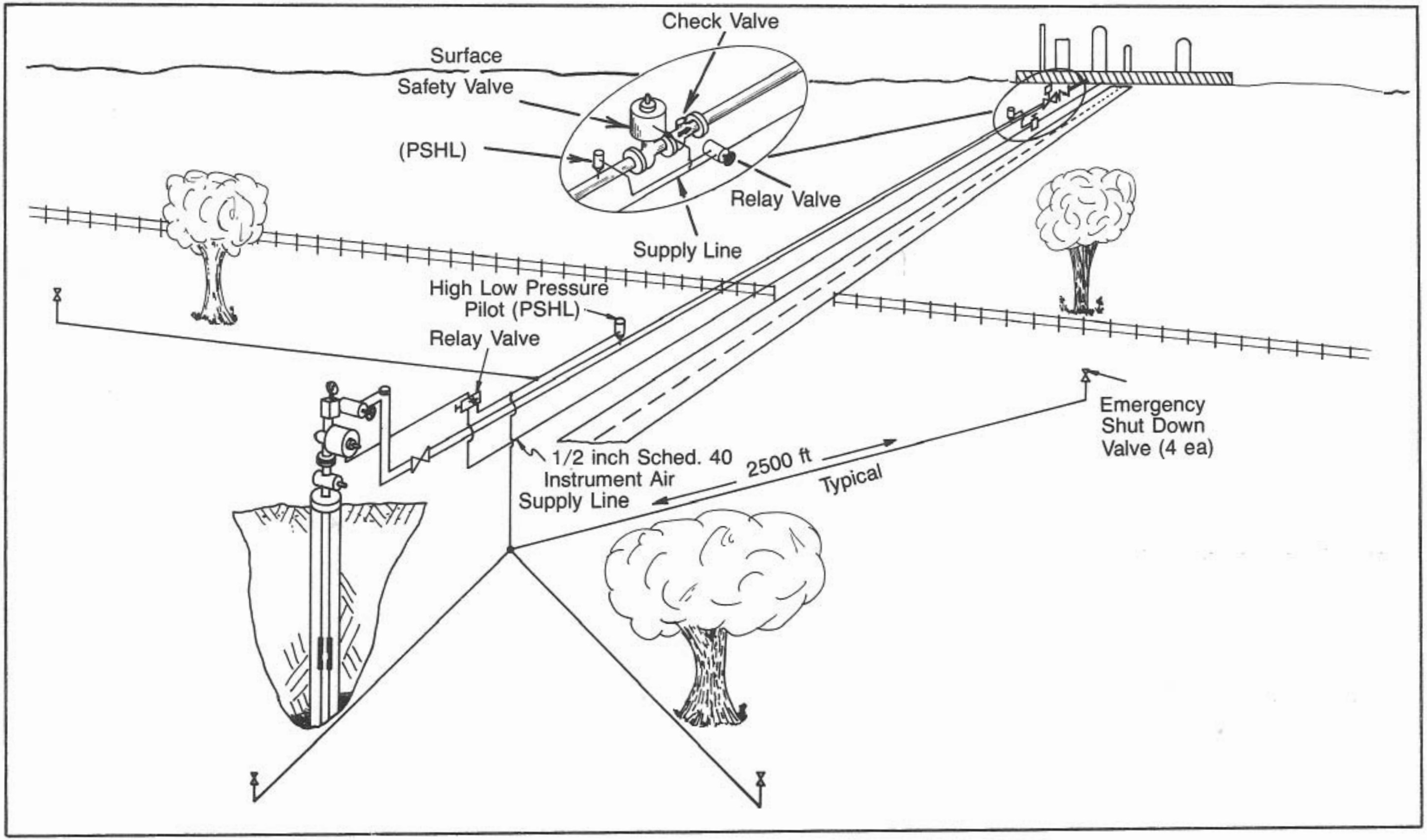

Fig. 16.13 *Safety system for sour gas well (Solution 5)*

The plant has a similar shutdown capability with valving on the instrument supply air it furnishes for the safety system. Closure could be speeded by installing quick exhaust valves in the supply line between the relay valves.

Calculations indicate that there will be about 380 psi decrease in pressure due to flow friction in the flow line. This means that the sensing pilot at the well must not be set to actuate below 400 psi or it would not be able to sense even a complete rupture.

Since the minimum flowing pressure is 1,100 psi and sensing is critical, a 10% margin would be about right and 1,000 psi would be a good choice. Although the working pressure of the pipe, 3,376 psi per ASME code for seamless pipe, is slightly above the shut-in tubing pressure of 3,300 psi, it is best to reduce the pressure loading on the line.

A pilot setting of 10% above the maximum flowing pressure of 1,500 psi would be appropriate (1,650 psi). The downstream pilot also should bracket the flowing pressure range of 715 to 1,150 psi. The setting on low is less critical at the downstream end because of the help provided by the check valve (FSV). A 700 psi setting should be appropriate and would be within the usual 10% below minimum operating pressure.

On the high end, a close setting is desired to give the safety system more time to actuate in order to prevent excessive pressure buildup. A 10% buffer here would call for a 1,265 psi setting.

The well was provided only with a landing nipple that could be used for installing a subsurface safety valve. If nearby traffic possibly could run into the well, or if population is close enough to require H_2S monitoring instruments, or if some other special problems arise, it would be advisable to install a surface controlled subsurface safety valve. Without the necessary nipple the choice left is for a direct controlled valve only.

The main criteria for choice of equipment is according to type of safety valve and what materials to use that are suitable for H_2S. In some cases, stainless equipment suitably heat treated is adequate. In most cases K-500 Monel equipment is proper. And, in a few cases, Inconel must be used where experience shows that copper may be leached from Monel.

The surface safety valve size and pressure rating are already established by the rest of the installation. Since the tree is a 2¹⁄₁₆ in. 5,000-psi tree, the safety valve should be:

Valve body:
- Size—2¹⁄₁₆ in.
- Working pressure—5000 psi
- Make & model—To match the rest of the tree

Service—H_2S
Material—Stainless trim, alloy body and bonnet, stainless or Monel internal parts with additional hard faced gates and seats
End connections—Flanged end, R-24
Actuator:
Type—Pneumatically controlled, ratio piston
Bonnet material—Alloy
Service—H_2S
Ratio—74:1
Cylinder working pressure—150 psi

Fig. 16.13 shows a safety system for the sour gas well in Problem 5.

The 2½-in. flow line must be capable of holding the shut-in pressure of 3,300 psi. Either an API 5,000 psi or ANSI 1500 Class valve must be used, except that the 1500 Class equipment must be of one of the material classes that has a working pressure exceeding 3,300 psi.

Because of the need for a weldable (H_2S resistant as welded or field stress relieved) material for the flanges in the pipeline, careful consideration is required of the pressure rating used on the pipe flanges. ANSI 1500 Class and API 5,000 psi flanges have the same geometry so either rating is acceptable for the valve body.

Equipment specifications include:

Valve body:
Size and pressure—2⁹⁄₁₆-in., 5,000 psi
Make and model—To match tree, reverse acting
Material—Alloy body, stainless internal parts
Service—H_2S
End connections—Flanged end, R-27
Actuator:
Type—Pneumatic controlled, ratio piston, reverse acting
Bonnet material—Alloy
Service—H_2S
Ratio—52:1
Cylinder working pressure—150 psi

The monitor pilots can be combination high and low pressure sensing pilots or pairs of high only and low only pilots. For simplicity of the installation and to reduce the number of leak points, combination pilots should be chosen. The specifications include:

	Upstream	*Downstream*
Type:	Monitor	Monitor
Sensing:	High-low	High-low
Valving:	Bleed, poppet	Bleed, poppet
Service:	H_2S	H_2S
Pressure setting, high:	1,650 psi	1,265 psi
Pressure setting, low:	1,000 psi	700 psi

Since the relay valves are subjected only to the compressed air, it is not necessary for them to be suitable for H_2S service. The same is true for the emergency shutdown valves. Relay valves are chosen partially on the basis of the low system pressure at which they actuate.

This will of course limit the minimum control system pressure in some cases. In this case the pressure needed by the safety valve on the tree is:

$$\text{Cyl. press.} = \frac{\text{Valve press} \times 2}{\text{Ratio}} = \frac{3{,}300 \times 2}{74} = 90 \text{ psi}$$

For the flow line valve the pressure is:

$$\text{Cyl. press.} = \frac{1650 \times 2}{52} = 64 \text{ psi}$$

or:

$$\text{Cyl. press.} = \frac{3300 \times 2}{52} = 128 \text{ psi}$$

depending upon whether it is assumed that the flow line valve needs to be reopened with shut-in tubing pressure on one side and zero on the other, or if a more logical, pilot setting pressure is on the upstream side.

There is also probably less than full differential across the valve due to header pressure being on the downstream side of the valve. If worst case conditions are assumed, the actuation time will be lengthened due to the excess time it takes to bleed down the pressure in the pilot system. Bleed down time will be rather long in this case due to the long control and supply lines. A more appropriate pressure at which to set the regulators is about 100 psi.

Specifications for the relay valves include:

Type—One-pressure
Valve—Poppet, 3-way

Signal—Bleed from orifice in relay
Working pressure—40 to 200 psi
Material—Stainless
Service—Standard

Specifications for the ESD valves include:

Valve—Spool
Handle—Pull to open
Material—Stainless
Service—Standard

Piping size is important for the long lines needed in this installation. If the ESD lines are too small in diameter, flow friction will be so great that the relay will not actuate. If they are too large, the time to bleed down the pressure can be excessive. The optimum size of the line can be calculated with a computer program; or an estimate can be verified by test.

Estimates can be costly with this much length. The supply line sizing will not cause failure; but here, too, there is an optimum size that can be calculated. If the line is too small, flow friction will slow the operating time. If too large, bleed down time for closure by the downstream relay will be longer. Also, cost will be higher.

Calculations are outside the scope of this book. Fig. 16.14 shows how the addition of check valves in the ESD lines can reduce actuation time by minimizing the volume that must be bled down.

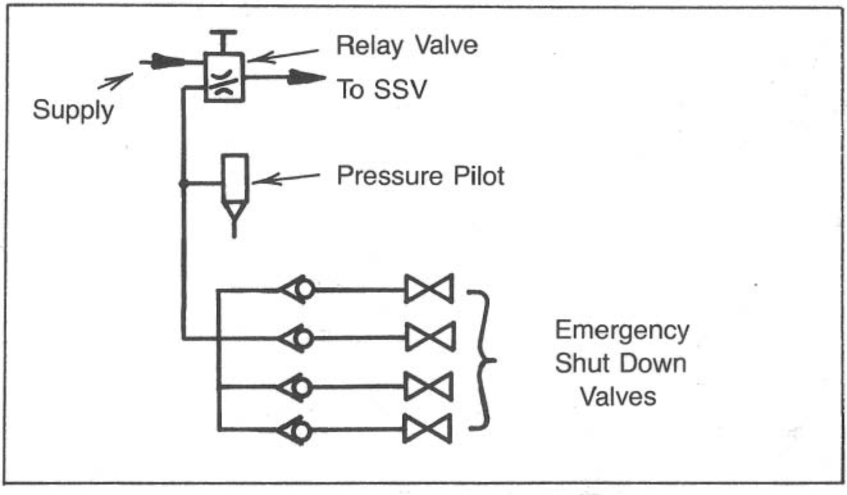

Fig. 16.14 *Check valves may be used to speed closure by reducing expansion time (Solution 5)*

Index

Note: 83 Underlined numbers indicate primary explanation where subject is found in several locations.