# AIR
# POLLUTION
# CONTROL
# EQUIPMENT
# SELECTION
# GUIDE

# AIR POLLUTION CONTROL EQUIPMENT SELECTION GUIDE

## Kenneth C. Schifftner

LEWIS PUBLISHERS

A CRC Press Company

Boca Raton London New York Washington, D.C.

**Library of Congress Cataloging-in-Publication Data**

Schifftner, Kenneth C.
Air pollution control equipment selection guide / Kenneth Schifftner.
p. cm.
Includes index.
ISBN 1-58716-069-2 (alk. paper)
1. Air--Purification--Equipment and supplies. I. Title.

TD889 .S35 2002
628.5′3--dc21 2002017493

Direct all inquiries to CRC Press LLC, 2000 N.W. Corporate Blvd., Boca Raton, Florida 33431.

International Standard Book Number 1-58716-069-2
Library of Congress Card Number 2002017493
Printed in the United States of America 1 2 3 4 5 6 7 8 9 0
Printed on acid-free paper

# *Acknowledgments*

I thank the following people for applying their considerable talents to the creation of this book:

Roy Prosser, draftsman, designer, and consummate good friend who produced sketches and drawings to supplement the text.

Tracy Leigh Schifftner, daughter, skilled technician, writer, and computer whiz who helped this computer novice clear some considerable hurdles regarding the writing and composing of the book.

Carolyn Ann Schifftner, daughter, athlete and scholar, whose humor and positive attitude made the rough spots more bearable.

Patricia Ann Schifftner, wife and efficient expeditor, who prodded me along with consistent "When are you ever going to finish that book?" encouragement.

# The Author

Kenneth Schifftner has more than 35 years of experience in the area of air pollution control. Starting as a draftsman in 1966, he has been involved with more than 800 successful gas cleaning projects. He holds a Bachelor of Science degree in Mechanical Engineering from the New Jersey Institute of Technology.

An author of more than 50 technical articles on gas cleaning technology, Schifftner was co-author with Howard Hesketh of the technical book *Wet Scrubbers* (Technomic Publishers, CRC Press), which is in its second printing, and provided the chapter on particulate removal in the *Air Pollution Engineering Manual* published by Van Nostrand Reinhold. Schifftner has been an instructor for numerous courses sponsored by the EPA, provided academic and corporate technical training seminars, served as an expert witness regarding air pollution control technology, and functioned as a consultant to small and large firms interested in solving air pollution problems.

Schifftner has also received four U.S. and foreign patents to date on novel mass transfer devices, which are used worldwide.

His experience includes the application of gas cleaning technology to hazardous and medical waste incinerators, boilers, pulp bleach plants, lime kilns, dissolving tank vents, fume incinerators, rotary dryers, tank vents, blenders/mixers, plating operations, metals cleaning, semiconductor manufacturing processes, and other systems. He has also applied dry filtration technology to woodwaste fired boilers. He has designed odor control systems using a wide variety of oxidants including hydrogen peroxide, sodium hypochlorite, ozone, chlorine dioxide, and potassium permanganate. He has researched and solved entrainment and visible plume problems in both conventional and novel gas cleaning systems. He is a specialist in the collection of fine particles that can affect public health.

Schifftner is a former chairman of the Environmental Control Division of the American Society of Mechanical Engineers (ASME). He is an active member of ASME, the Semiconductor Safety Association, and Technical Association for the Pulp and Paper Industry (TAPPI).

A resident of Encinitas, California, Schifftner is currently the product and district manager for Bionomic Industries Inc., which is based in Mahwah, New Jersey.

# Contributors

**Kenneth Schifftner**
Bionomic Industries Inc.
Oceanside, California

**Dan Banks**
Banks Engineering, Inc.
Tulsa, Oklahoma

**Deny Claffey**
**and Michael Claffey**
Allied Mechanical
Las Vegas, Nevada

**Joseph Colannino**
John Zink Company, LLC
Tulsa, Oklahoma

**Dan Dickeson**
Lantec Products, Inc.
Agoura Hills, California

**Wayne T. Hartshorn**
Hart Environmental, Inc.
Lehighton, Pennsylvania

**Joe Mayo**
Advanced Environmental
Systems, Inc.
Frazer, Pennsylvania

**Bob Taylor**
BHA Group, Inc.
Kansas City, Missouri

# Introduction

Welcome to the *Air Pollution Control Equipment Selection Guide*.

The selection of air pollution control hardware can be a daunting task. There are literally hundreds of equipment vendors offering a wide variety of air pollution control technologies. If this book has one purpose, it is to make that selection process easier.

In the following pages, we have labored to include the important information required by people interested in air pollution control that can be used in selecting the proper equipment for any air pollution control problem. There are no endorsements of one technology over another. Instead, the information is based on the type of technology used by the device, its effectiveness, its size and relative cost, and its common application(s). From this general information, one can decide the best technology to use or, lacking a clear cut decision, choose the areas in which to obtain more detailed information.

To provide an understanding of the terminology used and the basic technology applied to particulate capture, gas cooling, and gaseous contaminant control, we included an "Air Pollution Control 101" chapter. In this chapter, the basics of air pollution control are described. Inertial forces such as impaction and interception are discussed, along with less "forceful" forces such as diffusion, electrostatics, Brownian motion, and phoretic forces. Any, or all of these forces may be used by a particular pollution control device. Not only does this section serve as an introduction to the concepts mentioned in this book, but it also enables the reader to save time by quickly referring back to this section for clarification of terminology or of the technologic descriptions. Although you are welcome to, you do not have to go to another text on air pollution control basics. Even if you are an experienced applications engineer, we suggest that you review this section first to obtain an understanding of the terms we use and the context in which we use them.

The subsequent sections purposely use a common structure. The sections are divided by the primary technology used, that is, quenching, cooling, particulate removal, gas absorption, and so on. Within these sections, specific technology types are mentioned in detail. This structure is intended to make it easier for the reader to jump from section to section as technologies are compared. In each section, we define the type of gas cleaning device, the basic physical forces used in it, its common sizes and costs, and its most common uses. Caveats and suggestions about applying the technology are mentioned as an aid. These comments are not intended to be limiting. Quite to the contrary, descriptions of the devices are intended to let the reader select the type of equipment that, after review of the information, best suits his or her application. There may be occasional mentioning of a particular vendor or device type by tradename; however, this is not intended to be an endorsement of that device.

We define the equipment by device type based on primary function, not by trade name or most common application. The index, however, is structured to help you link the application to the equipment. This was done intentionally to speed up the selection process. If you are researching an application in a specific industry, it is suggested that you go to the index first. Look up the application, and it will direct you to the common devices used.

Many air pollution control problems are solved not with one type of device, but with a variety of designs applied synergistically. An example may be a hot gas source (say, an incinerator) the gases of which must first be cooled (quencher), the particulate removed (Venturi scrubber or precipitator), and the acid gases absorbed (packed or tray scrubber). To make this task easier, we included sections on each of these devices and noted where they are commonly used in concert with other equipment. You can imagine that there are near endless varieties of equipment combinations. That is why we highlight the primary functional area of the device. Many times, the designs can be combined in novel fashion to suit a particular application. You are encouraged to be inventive.

Wherever possible, we have included current photographs or drawings of typical equipment within that device type. This was intended to help you obtain an understanding of the equipment arrangement and to help you recognize existing devices that, perhaps, no longer are properly marked or identified. It is like a spotter's guide for air pollution control equipment. Again, showing a photo is not to be construed as an endorsement of that particular design. It is merely a representation of a common type of device within that category.

As you may have noted already, the publisher has chosen the authors partly for their knowledge and partly for their conversational writing style. We hope this combination will make this book an easy to read, technologically accurate reference book that will make the selection of air pollution control equipment easier for you.

# Contents

## Chapter 9 Filament (mesh pad) scrubbers

## Chapter 10 Fluidized bed scrubbers

## Chapter 11 Mechanically aided scrubbers

## Chapter 12 Packed towers

# Appendix B: List of photo contributors

# chapter 1

# Air pollution control 101

Having spent more than 30 years in the air pollution control industry, I am still amazed by how the basics of air pollution control are misunderstood by so many.

Our newspapers have numerous articles regarding the need to control toxic or carcinogenic substances, but rarely do you see an article explaining *how* it is done. In this chapter we will explore the basics of air pollution control, how the devices work, and, in doing so, introduce some of the terminology used in the industry.

## It is separation technology

Air pollution control can be generally described as a "separation" technology. The pollutants, whether they are gaseous, aerosol, or solid particulate, are *separated* from a carrier gas, which is usually air. We separate these substances because, if we don't, these pollutants may adversely affect our health and that of the environment. Of primary importance is the effect of the pollutants on our respiratory system, where the impact is most noticeable.

Gaseous pollutants are compounds that exist as a gas at normal environmental conditions. Usually, "normal" is defined as ambient conditions. These gases may have, just moments before release, been in a liquid or even solid form. For the purposes of the air pollution device, however, the state they are in just prior to entering the control device is what is most important.

Aerosols are finely divided solid or liquid particles that are typically under 0.5 μm diameter. They often result from the sudden cooling (condensation) of a gaseous pollutant, through partial combustion, or through a catalytic effect in the gas phase. In the latter condition, a pollutant in the gas phase may combine to form an aerosol in the presence of, for example, a metal co-pollutant. Acid aerosols such as $SO_3$, for example, can form in the presence of vanadium particulate that may be evolved through the combustion of oil containing vanadium compounds. Solid metals in a furnace can sublime (change phase from solid directly to gaseous) in the heat of an incinerator, then cool sufficiently to form a finely divided aerosol.

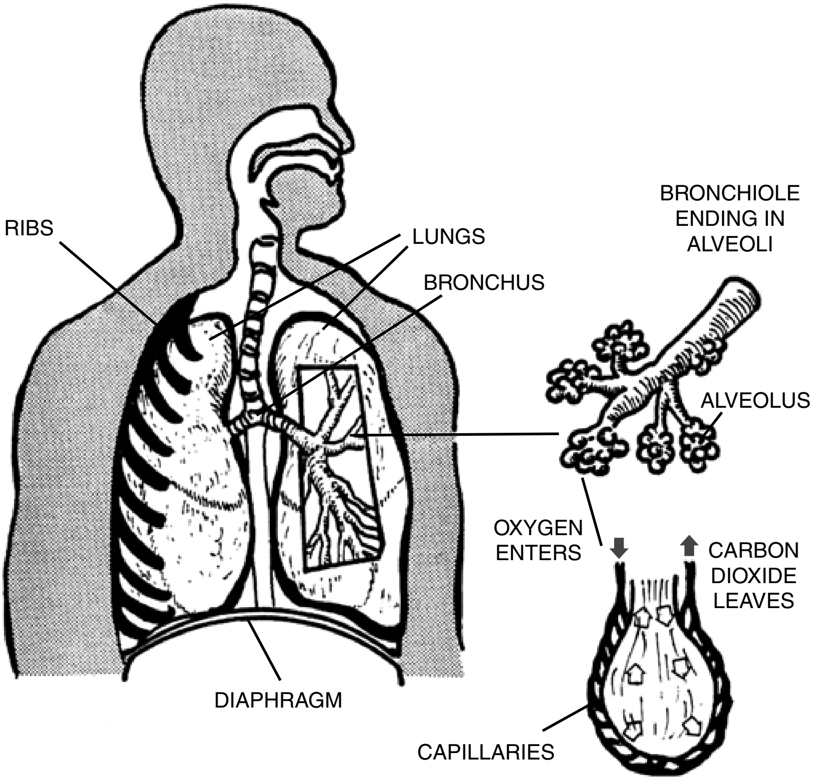

***Figure 1.1*** Respiratory system diagram. (From Marshall, James, *The Air We Live In*, Coward, McCann, and Geoghegan, New York, 1968.)

Solid particulate can be evolved through combustion or through common processing operations such as grinding, roasting, drying, calcining, coating, or metallizing.

Whatever the state of the pollutant, the function of the air pollution control device is to separate that pollutant from the carrier gas so that our respiratory system does not have to.

Our respiratory system is our natural separation system. Figure 1.1 depicts the major portions of the human respiratory system. Large particles are removed in the larger openings of the upper respiratory area, smaller particles are removed in the more restricted bronchial area, and the tiniest particles are (hopefully) removed in the tiny alveolar sacs of the lungs.

Air pollution control truly mimics Mother Nature in its separation function. In general, low energy input wet-type (those using water as the scrubbing medium) gas cleaning devices remove large particles, higher energy devices remove smaller particles, and even higher energy (or special technology) devices remove the finest pollutants. In order of *decreasing* pollutant size, it goes like this:

The larger the particle, or liquid droplet for that matter, the easier it is to separate from the carrier gas.

| Mother Nature | Man-Made Devices |
|---|---|
| Upper Respiratory | Low Energy Input |
| Bronchial | Moderate Energy Input |
| Alveolar | High Energy or Special Technology |

These characteristics were codified into a helpful chart known as the "Frank" chart, shown in Figure 1.2. It was named after its creator, an engineer at American Air Filter. This chart shows common particulate sizes and the general types of collection mechanisms and devices used for their control. The pollutants are grouped by their settling characteristics. Larger particles (above about 2 µm aerodynamic diameter) generally follow Stokes law regarding settling velocities. Below about 2 µm, a correction factor (Cunningham's correction factor) is needed to adjust Stokes for the longer settling times for these size particles.

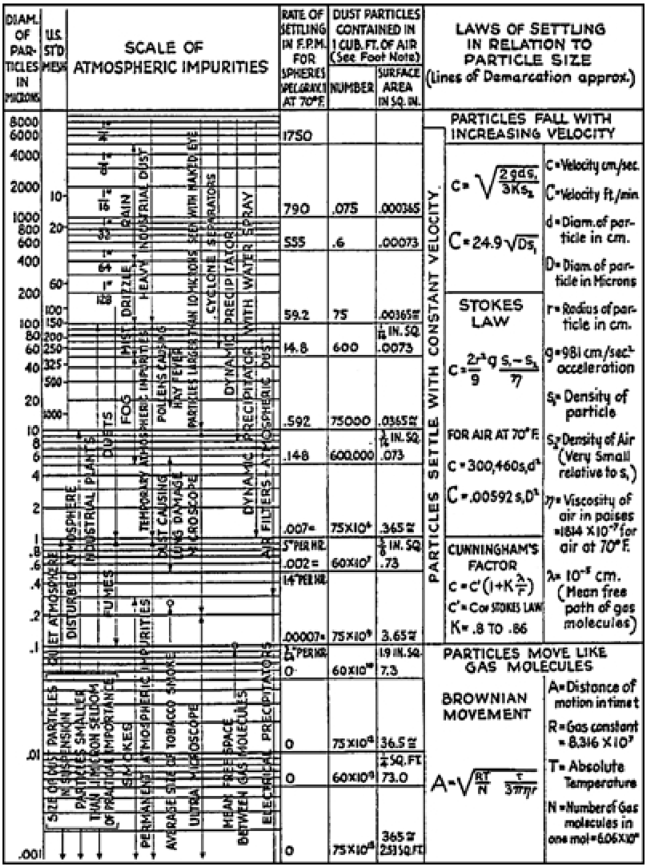

*Figure 1.2* The "Frank" chart (American Air Filter).

In general, particles greater than 20 μm in aerodynamic diameter can be controlled using low energy wet-type devices. Subsequent chapters will explore these devices in detail. These are knock out chambers (traps or settling chambers), cyclone collectors, mechanically aided wet scrubbers, eductors, fluidized bed scrubbers, spray scrubbers, impactor scrubbers, and venturi scrubbers (low energy).

For particles in the 5-μm aerodynamic diameter and above, the Venturi scrubbers (moderate energy) are the most common type devices in use. Some vendors have improved the performance of low energy devices sufficiently to span the gap between those capable of removing 20+ and 5+ μm pollutants. Some mechanically aided wet scrubbers also bridge this gap at higher energy input. For lower concentrations of particles in this size range, enhanced scrubbers such as air/steam atomized spray scrubbers, and some proprietary designs are used.

For particles below 5 μm aerodynamic diameter, higher energy input devices are typically used or techniques are applied to enlarge these particles to make them easier to capture. Such designs are Venturi scrubbers (high energy), air/steam atomized spray scrubbers, condensation scrubbers, and combination devices. If the inlet loading (concentration) is less than approximately 1 to 2 grs/dscf (grains per dry standard cubic foot), electrostatic forces can be sometimes applied. These include wet electrostatic precipitators and electrostatic scrubbers.

For dry type separation devices such as fabric filter collectors (baghouses) and electrostatic precipitators, the energy input is fairly constant regardless of the particle size. Even among these designs, however, increases in energy input yield increases in the collection of finer pollutants. Baghouses are often precoated with a fine material to reduce the permeability of the collecting filter cake and improve fine particulate capture. This cake adds to the pressure drop which mandates, in turn, an increase in energy input. Precipitators are often increased in field size to remove finer particulate thereby requiring greater power input. These dry devices, in general, use less total power input than equivalent wet devices when removing particulate.

## *Wet collection of particulate*

Wet scrubbers exhibit an increase in total energy input as the target particle size decreases as a result of the capture technique used.

How is particulate removed in a wet scrubber?

Studies of particle settling rates and motion kinetics have shown that particles greater than approximately 2 to 5 μm behave inertially and smaller particles tend to behave more like gases. For the former, if you could throw a particle like a baseball it would follow a given trajectory (perhaps curve or slide but generally follow a given path). Particles less than approximately 2 μm diameter tend to be influenced by gas molecules, temperature and density gradients, and other subtle forces and do not follow predictable trajectories. If you could throw one of these particles, it might turn and hit you in the face. These are the "givens" in the wet scrubber design equation.

Nearly all wet separation devices use the same three capture mechanisms. These are:

Impaction
Interception
Diffusion

Basically, wet scrubbers remove particulate by shooting the particulate at target droplets of liquid.

Figure 1.3 shows a target droplet being impacted by a particle. The particle has sufficient inertia to follow a predicted course into the droplet. Once inside the droplet, the combined particle/droplet size is aerodynamically much larger, therefore the separation task becomes easier. Simply separate the droplet from the gas stream (more on that later) and one removes the particle(s).

Figure 1.4 shows a particle, perhaps a bit smaller, moving along the gas stream lines and being intercepted at the droplet surface. The particle in this case comes close enough to the droplet surface that it is attracted to that surface and is combined with the droplet. Again, once the particles are intercepted, the bigger droplet is easier to remove.

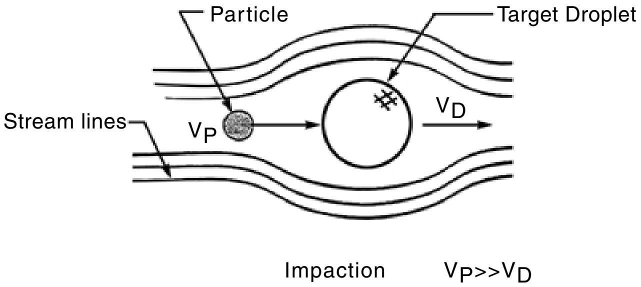

*Figure 1.3* Impaction (Bionomic Industries Inc.).

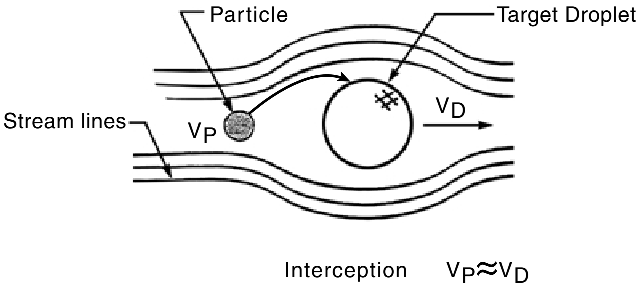

*Figure 1.4* Interception (Bionomic Industries Inc.).

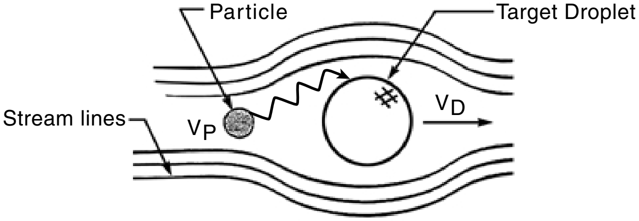

*Figure 1.5* Diffusion (Bionomic Industries Inc.).

Figure 1.5 depicts an even tinier particle that is so small it bounces around in the moving air stream buffeted by water and gas molecules. In this case the particle *diffuses* over to the droplet and, by chance, is absorbed into the droplet. Obviously, to increase the chances of capture by diffusion, increase the number of droplets per unit volume. This decreases the distance the particle has to travel and reduces the chances that it might miss a droplet. Experience has shown that the smaller the target droplet and the closer the droplet is to an adjacent droplet, the greater the percentage particulate capture. To make greater quantities of smaller droplets requires increased energy input to shear or form the liquid into tiny target droplets. This is evident in common garden hose spray. The higher the velocity out of the nozzle, the finer the spray.

Once the particulate is into the droplet, Mother Nature tends to help us. Luckily, water droplets generally tend to agglomerate and increase in size upon contact. If we spin, impact, or compress the droplets together, they combine to form even easier to remove droplets.

In Figure 1.6, we see a Venturi scrubber (left) connected to a typical cyclonic type separator. This device separates the droplets using centrifugal force. The centrifugal force pushes the droplets toward the vessel wall where they form a compressed film, agglomerate, accumulate, and drain by gravity out of the air stream.

Sometimes chevron type droplet eliminators are used. These place a waveform in the path of the droplet (Figure 1.7). The same thing occurs. The droplets build up, drain, and carry their particulate cargo out of the gas stream.

Other forces can also be used to separate fine particulate. If we saturate the gas stream with water vapor then cool the gas stream, the water vapor will condense on the particulate to form water drops. This same event occurs everyday in the form of rainstorms. If it was not for the fact that water vapor condenses on micron and submicron particulate during cleansing rainstorms, we would all suffocate. Condensation scrubbing is the manmade version of the rainstorm.

## *Dry collection*

What about collecting the particulate *dry*?

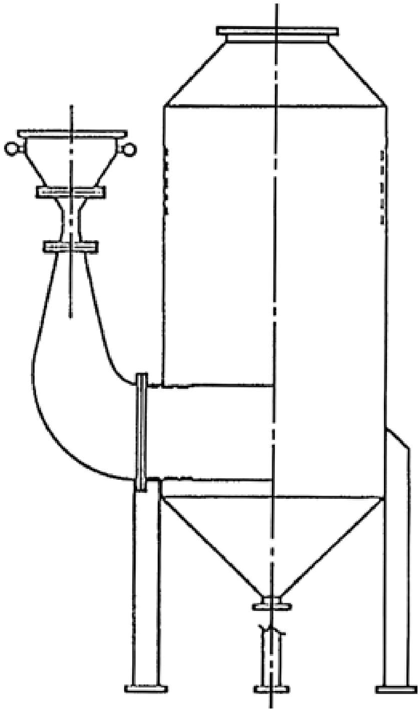

*Figure 1.6* Venturi scrubber and cyclonic separator.

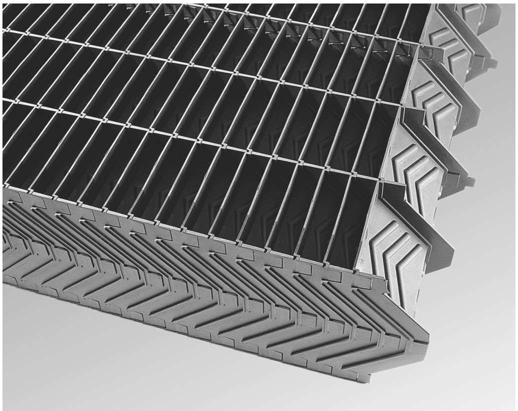

*Figure 1.7* Chevron droplet eliminator (Munters Corp.).

For very large particles (those greater than approximately 50 µm aerodynamic diameter or about the diameter of a human hair), traps, and knockout chambers are used. These basically slow the gas stream down sufficiently so that the particles drop out. These are often seen on the end of lime kilns and mineral calciners as primary separators.

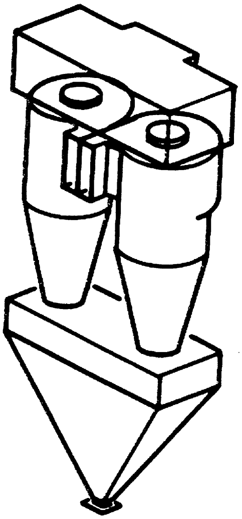

*Figure 1.8* Cyclone collector (Bionomic Industries Inc.).

Using the same centrifugal techniques previously mentioned for cyclonic separators, dry cyclone collectors (Figure 1.8) could be used to separate the particulate in a dry form. These devices are commonly used to separate particles in excess of 5 μm diameter because these particles exhibit the inertia effects mentioned previously. In general, the smaller the cyclone diameter, the smaller the particle that can be removed (because the radius of turn is greater).

To remove more particulate dry, fabric filter collectors or baghouses are used. These devices filter the gas stream through filter media, previously removed particulate, or both to remove more particulate. The filter media is shaken, shaker type collector, pulsed with air or inert gas, pulse type baghouse, or the airflow is reversed to separate the accumulated dust from the filter media, reverse air baghouse.

Subsequent chapters will reveal some of the basics of baghouse selection and design. The general sizing involves selecting the proper filtration media for the application, the proper cleaning method, and the sizing of the housing velocity or can velocity so that the particulate removed does not entrain back into the gas stream.

For very large gas volumes at low inlet concentrations (or loadings) of particulate, dry electrostatic precipitators are used. These units are sized based upon the resistivity of the target dust or particulate (an electrical characteristic) and the particle's ability to migrate to a collecting surface. These parameters determine the electrostatic charge that needs to be applied to charge the particle and the surface area required to collect the particle to a thin enough depth so that it does not insulate the collecting surface and prevent subsequent capture. Subsequent chapters will present the details of precipitator design and selection and how they operate.

## *Gas absorption*

What about gases?

In the most basic terms, Mother Nature likes to be in equilibrium. If you blow totally clean air over smelly liquid, some of the smelly gaseous components from the liquid will leave the liquid and seek equilibrium with the gases over the liquid. True equilibrium occurs when the smelly gas ceases to leave the liquid and also ceases to return to the liquid.

In the separation of contaminant gases from carrier gases, we help Mother Nature. Figure 1.9 shows a condensing wet scrubbing system.

The processes involved in the separation of contaminant gases from a carrier gas include:

1. Condensation
2. Absorption
3. Adsorption
4. Gas phase destruction (thermal or chemical)

Condensation involves cooling the gas stream sufficiently to condense the contaminant gas. The limit of condensation is the equilibrium condition between the contaminant gas and the carrier gas at the final mixture temperature. For example, a gas stream saturated at 200°F can be condensed to, say 100°F; however, the resulting outlet gas stream may still contain the amount of contaminant gas that will be at equilibrium with the carrier gas at 100°F. Condensation is therefore useful but not always totally effective unless one cools the carrier gas to very low temperatures.

Absorption is the most common mechanism used in the control of contaminant gases. In general terms, absorption is maximized by:

1. Creating and maintaining the highest liquid surface area to unit gas volume as possible
2. Creating and maintaining a favorable concentration gradient in the scrubbing liquid vs. the contaminant gas
3. Doing the above at the lowest energy input

Contaminant gases can only enter a liquid stream at a given number of molecules per unit area. This varies by the type of contaminant, the type of liquid, the temperature, solubility, and other parameters. In general, however, the greater the surface area of liquid, the greater the amount of gas that can be absorbed and the greater the *rate* at which it can be absorbed.

The leaner (or cleaner) the scrubbing liquid, the greater the transfer of contaminant into the liquid. Gas scrubbers are therefore typically designed to place the cleanest liquid near the cleanest gas (usually at the discharge of the scrubber).

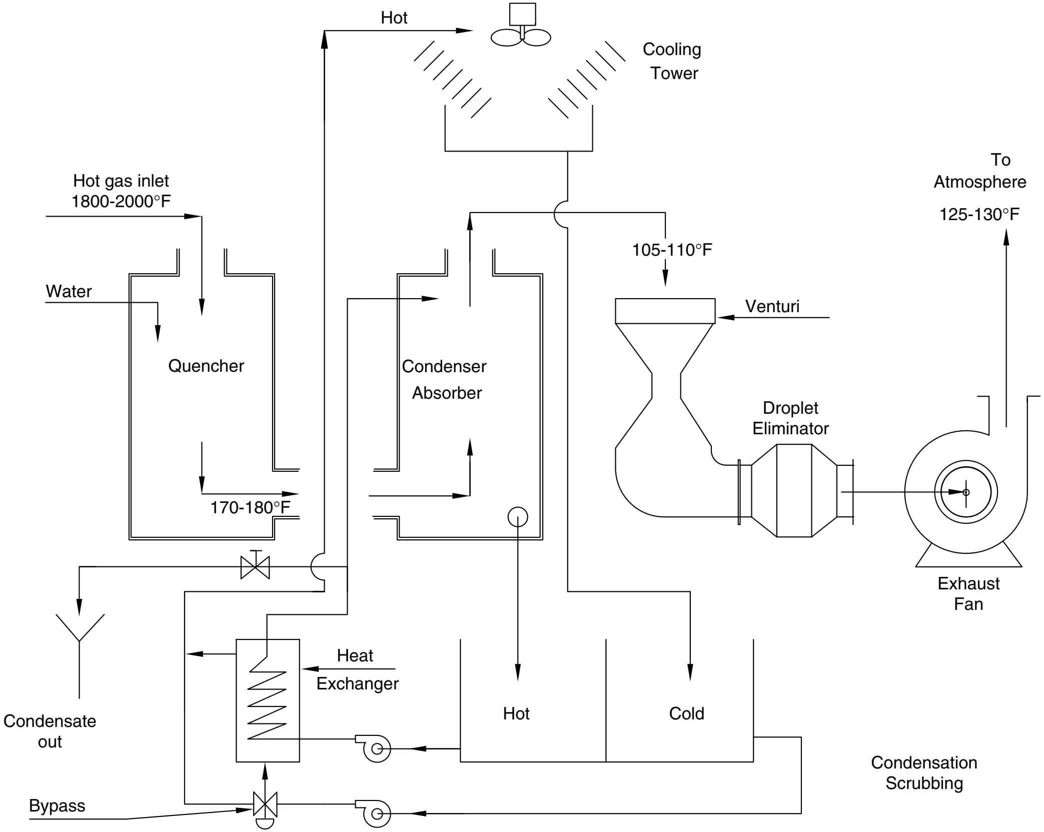

*Figure 1.9* Condensation scrubbing system components.

## *The concept of number of transfer units in absorption*

Most gaseous air pollution control processes involve the absorption of the contaminant gas followed by a liquid phase reaction to a salt or oxide that exerts a much lower partial pressure than the raw gas. This process is sometimes called *chemical absorption* or *chemisorption* because the absorption is completed by the subsequent chemical reaction. This action simplifies the design immeasurably because little if any of the absorbed gas wants to strip back into the gas stream. In these very common cases, the concept of number of transfer units (NTUs) can be used.

The NTUs are defined by the *gas absorption process*, not by the scrubber design. The NTU concept generally refers to counterflow designs where the liquid moves in the opposite direction to the gas and where the subject gas is absorbed and reacted to form a compound that exhibits little or no vapor pressure at the design conditions or where the system is very dilute, that is, where the dissolved gas is unreacted but still exhibits little propensity to strip back out of the liquid.

The following explanation of NTUs was contributed by Dan Dickeson of Lantec Products (Agoura Hills, CA).

## *The transfer unit concept in gas absorption*

Wet scrubbing can be an efficient way to purify air by removing toxic gases that are soluble in water, or that can be decomposed by water-based chemical additives.

When water comes in contact with air that is polluted with a soluble gas, the water can only dissolve a certain amount of that gas before becoming saturated. Once saturated, it cannot absorb any more. However, the amount of pollutant that can be absorbed by water is not a constant; it depends on how polluted the air is. For example, air inside a closed bottle of vinegar contains acetic acid vapor (which is what we smell). When the last drop of vinegar is poured out of the bottle, the smelly air left inside can be purified by pouring some clean water into the bottle and closing it. Acetic acid vapor will dissolve in the water, leaving less and less odor in the air. But as acid is absorbed from the air, the water itself becomes smelly, so it is impossible to remove all the odor from the air with a single shot of water. What happens is illustrated by Figure 1.10.

At first, when the water is clean and the air very polluted, acid transfers quickly from the air to the water. But as the amount of acid in the air decreases, and the water gets closer to being saturated, the contents of the bottle change more and more gradually. The first 20% of the acid is easy to remove. The last 20% takes much longer to remove. In this example the last 10% is impossible to remove. The closer the two curves get, the more difficult it becomes to absorb additional acid. Chemical engineers define a *transfer unit* as a reduction in pollution by an amount equal to the driving force for absorption (the distance between the curves). This is a useful concept because

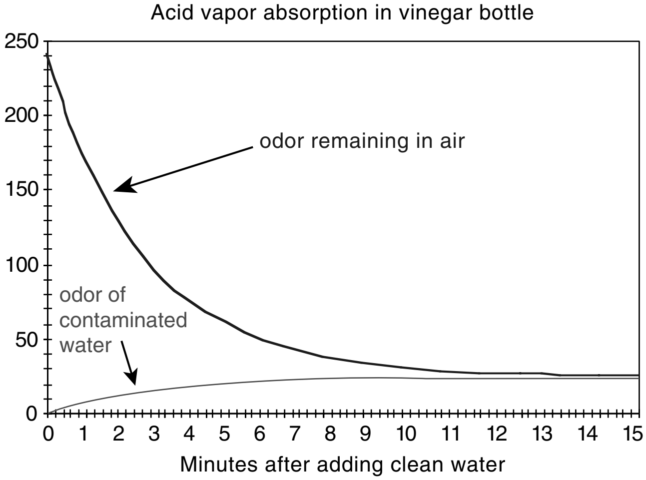

***Figure 1.10*** Equilibrium (Lantec Products, Inc.).

it turns out that each transfer unit takes the same amount of time to accomplish in a closed system like a bottle, or the same amount of *residence time* in a continuous device such as a scrubber.

The NTU is a measure of how close a scrubber can come to the saturation limit when purifying polluted air. If neutralizing chemicals are added to eliminate the odor of contaminated water, then there is no limit, and the NTU is a measure of how close to zero the pollutant level will come.

Note that the process of odor reduction in the empty vinegar bottle could be speeded up considerably by shaking the bottle to bring the air and water into closer contact. In continuous-flow scrubbers, intimate air-water contact is obtained by using packings, froth trays, or spray nozzles to reduce the residence time needed for absorption. The effectiveness of these devices in accelerating absorption is measured by the height of a transfer unit (HTU), which is the height — or depth — of the contacting section needed to accomplish one transfer unit of purification at a given speed of air flow through it. (Note: NTUs are also described in detail in classic textbooks such as Robert Treybal's textbook *Mass Transfer Operations* published by McGraw-Hill.)

Because the gas absorption process determines the NTUs, not the device itself, all gas absorbers can be modeled as equivalents. Any absorption problem can be defined in the terms of an equivalent of a packed tower, tray tower, fluidized bed scrubber, spray tower, a mesh pad tower, and so on. There are no miracles that somehow allow a particular design to avoid the realities, the chemistry, of gas absorption. The concept of NTUs makes it easy to compare devices.

The number of transfer units can be expressed simply as:

$$\text{NTU} = \ln(\text{concentration IN}/\text{concentration OUT})$$

where ln is the natural log.

The NTUs required are simply the natural log of the ratio of the inlet concentration to the desired outlet concentration.

The NTUs required, for example, to reduce an inlet loading of 1500 ppmv hydrochloric acid to 5 ppmv when scrubbing with caustic (low vapor pressure sodium chloride is produced) would be:

$$\text{NTU} = \ln(1500/5) = \ln(300) = 5.7$$

This means that 5.7 transfer units supplied by *any* absorber of *any* design will be required to reduce the hydrochloric acid inlet from 1500 ppmv to 5 ppmv when scrubbing with caustic.

Vendors of gas cleaning equipment typically perform tests on their designs to determine the NTUs that their design may be able to produce. A tray scrubber vendor may determine, for example, that each of their trays will provide 0.8 transfer units per tray when operated under normal conditions.

To remove the acid in the previous example, we would need:

$$(5.7 \text{ transfer units required})/(0.8 \text{ transfer units provided per tray}) = 7.12 \text{ trays.}$$

A packed tower with inefficient packing might need 2 feet of their packing to provide 1 transfer unit. They would need:

$$5.7 \times 2 = 11.4 \text{ feet of packing.}$$

A packed tower vendor with better packing may only need 1.5 feet of packing per transfer unit. They would need:

$$5.7 \times 1.5 = 8.55 \text{ feet of packing.}$$

Please note: The removal efficiency of all of these systems would be the *same.*

It is also obvious that, for a given inlet loading, the lower the required outlet loading, the higher the NTUs required.

If the gas system is not dilute or does not react with the scrubbing solution, the process gets much more complicated. Dickeson will touch on those issues in his chapter.

Adsorption is a separation process where the contaminant gas becomes physically attached to a medium, usually activated carbon, zeolites, or clays. The contaminant gas is physically attached to the adsorbent's surface or in pores in that surface or both. Because the pollutant is physically attached, conditions can often be applied that desorb the pollutant from the adsorbent.

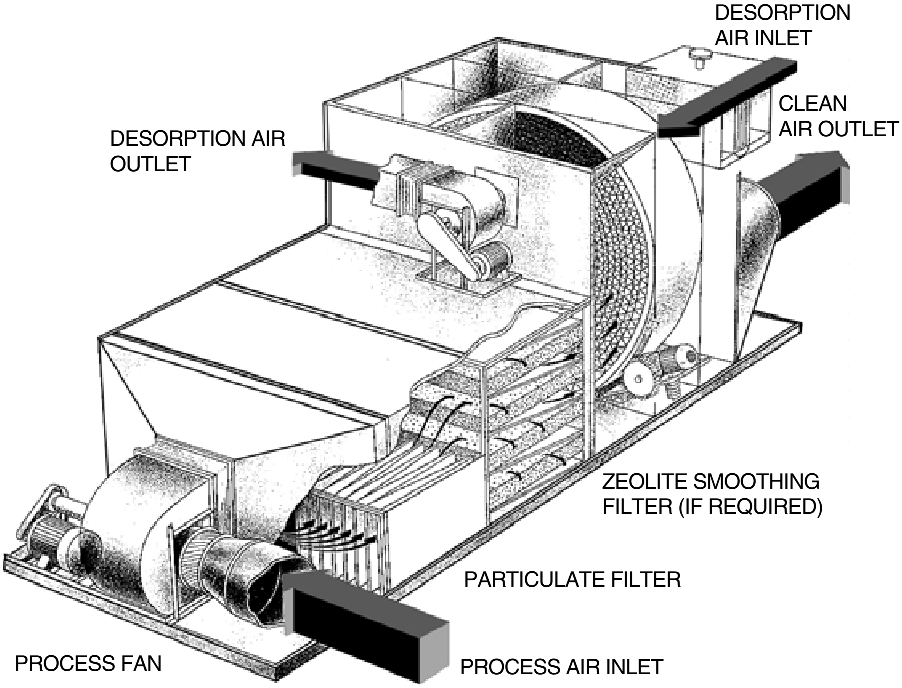

***Figure 1.11*** Rotary concentrator (Munters Corp.).

Other desorption methods involve the application of inert gas (such as nitrogen) or heat. In Figure 1.11, we see a wheel-shaped accumulator (concentrator) device that is charged with zeolite. The wheel gradually rotates so that one section adsorbs the contaminant and the other section is thermally desorbed. The contaminant, in this case a hydrocarbon that has some heating value, is thermally oxidized in a separate section and this heat is used to perform the desorption.

The design of adsorption systems involves the development of adsorption characteristics for each contaminant compound. These characteristics are graphed and the result is called an isotherm for that compound. Upon accumulation of the compound into the adsorbent, a point is reached wherein the adsorbent cannot retain any additional gaseous component and break through or bleed through is observed. By regulating the type of adsorbent, its depth, and its time between desorbing (or replacement), the proper removal conditions can be obtained.

Because water vapor can be adsorbed by many of the activated carbon products, water vapor is typically removed prior to an adsorber using carbon. This is accomplished by first cooling the gas stream, then reheating it either using the heat of compression of the fan or by adding supplemental heat.

Gas phase destruction generally occurs in devices called thermal oxidizers. At present, other technologies such as plasma and the application of intense ultraviolet (UV) light are beginning to be explored. In these devices, the chemical bonds of the pollutant are broken through the application of heat, electrical, or light energy.

Thermal oxidizers include *direct flame* (either open in the form of a flare or enclosed in a refractory or water lined chamber), *catalytic* (where a catalyst is used to increase the speed of the bond separation), *regenerative* (where the heat from the combustion process is used to preheat the incoming gas stream and improve thermal efficiency), and *recuperative* (where the heat generated is recovered for subsequent use). These devices typically contain a burner that, at least, preheats and initiates the thermal oxidation process, and a chamber or housing that contains the products of combustion long enough to allow the desired destruction of the pollutant. In many cases, the pollutant concentration is sufficiently high to allow sustained oxidation without the addition of supplementary fuel.

The residence time in the oxidizer at a minimum temperature has been shown to be an important parameter that controls the ultimate destruction efficiency of the oxidizer. Many regulatory codes require minimum residence times.

For burning solid or mixed wastes, the solid wastes may be first volatilized or converted to carbon, then oxidized in an afterburner. The afterburner becomes the first stage, in effect, of an air pollution control system. This arrangement is common for medical and hazardous waste incinerator systems.

In systems that use UV light, an oxidant (such as hydrogen peroxide) is typically injected into a mixed gas stream followed by the application of intense UV light. The hydroxyl radicals formed by breaking the oxygen/hydrogen bond in the peroxide rather than using free oxygen present in the gas stream attack the pollutant.

## Hybrid systems

To make life really interesting, combinations of two or more of the previously mentioned technologies are not uncommon.

As pollution control regulations have tightened, the need to remove high percentages of each component of a multicomponent pollutant stream has become more important. One control technique may be perfect for one of those stream components; however, it may be totally unsuited for another. For this reason (and others as you will learn in ensuing chapters), hybrid systems combining various technologies are used.

The *order* in which these technologies are used is very critical to their success. For example, if ammonia is present in a stream where it might react in the gas phase with another pollutant (say, an acid), the ammonia is usually removed first. This is done so that the ammonia/acid reaction does not form a particulate that would subsequently have to be removed. Another example is the purposeful combustion of sulfurous odorous compounds using a thermal oxidizer, then scrubbing out the sulfur dioxide that is formed using a wet scrubber.

The condensation scrubbing system mentioned previously may include a variety of gas cleaning techniques and even be followed by a wet electrostatic precipitator for fine residual particulate removal.

The combinations used are dictated by the problem to be solved. The problem is broken down into its respective components, suitable technology is selected to control each, then a review is made to minimize or eliminate interferences or redundancies in the control systems. An example of the latter is the use of a wet direct condenser/absorber vs. an evaporative cooler on a hot gas cleanup problem. If acid gases and submicron-sized particulate are present and need to be controlled at high efficiency, a wet scrubber can be configured to both subcool the gases and absorb the acid gases. If the acid gas content is minor, an evaporative cooler could be used followed by a baghouse or precipitator. If the acid gas content is somewhere in between and the plant does not have water treatment capability, a spray dryer (dry scrubber) followed by a baghouse or precipitator might be a better choice.

The foregoing hopefully provided the basics, and some important detail, on how air pollution control equipment operates and some of the theories on which the technology is based. Combining the information contained in this chapter and the more detailed information contained in subsequent chapters, you will be able to properly select the best air pollution control equipment for your application. “Air Pollution Control 101” is just the start. In the following chapters, we will describe various types of technologies that can be used to control your specific air pollution control problem. You will find that nearly any combination of pollutants can be effectively controlled if the proper control technique is applied. This chapter, and the ones that follow, should make this selection much easier and provide confidence that your ultimate selection is a wise one.

# chapter 2

# Adsorption devices

## Device type

*Adsorption devices* consist of adsorptive media, either static or mobile, in a containing vessel through which the gas and its contaminants are passed. The contaminants are adsorbed onto and into pores in the adsorbing media.

## Typical applications and uses

*Adsorbers* are most commonly used for solvent recovery, control of hydrocarbon emissions from storage tanks, transfer facilities, printing operations, and similar processes where volatile hydrocarbons are present. Activated carbon types are also used to control sulfurous odor, such as that from sewage treatment plants. Special impregnated carbons are used to chemically react with the contaminant once it is adsorbed thereby extending the carbon life. Where the hydrocarbon has recovery value, adsorbers are often used after process vents, evaporators, or distillation columns to polish the emission down to regulatory limits. They are also used on process vents in lieu of thermal oxidizers.

Regenerative adsorbers are generally not used where the contaminant is not economically recoverable or the desorption process has a low yield. For example, cases where adding steam to desorb the carbon results in an unusable water mixture tends to make adsorption less attractive.

Drum type units are often attached to process tanks to control hydrocarbon breathing or fill venting losses. The gas flow rates are typically low and these drum type units can be applied very economically.

Filter type units are used in ventilation systems for hospitals, clean rooms, auditoriums, bus stations, loading docks, and other environments where adsorbable hydrocarbons may be present.

## Operating principles

*Gas adsorption* is the physical capturing of contaminant gas molecules onto or into the surface of a suitable solid adsorbent, such as activate carbon, zeolite, diatomaceous earth, clays, or other porous media. The gas molecule is physically trapped by the pore openings in the media and accumulates over time until the media saturates and can hold no more. In some devices, the media is desorbed in place through the application of a gas such as nitrogen, or steam, to drive the contaminant from the pore openings of the media. In others, the media itself is directed to a device where thermal energy (heat) is applied to desorb and recover the media.

Adsorption is basically a pore surface and size phenomenon. The size of the gas molecule dictates the pore size of the required adsorbent and the bulk pore area of the adsorbent per unit volume determines the amount of adsorbent required to control the specific pollutant. Adsorbents exhibit certain physical characteristics with respect to pore size. These characteristics are generally called *macropores* and *micropores* as shown in Figure 2.1. As defined by the word prefixes, *macro*pores are large pore openings and *micro*pores are small pore openings. In practice, adsorbents exhibit a mixture of both. The volume of adsorbent required is controlled by the contaminant

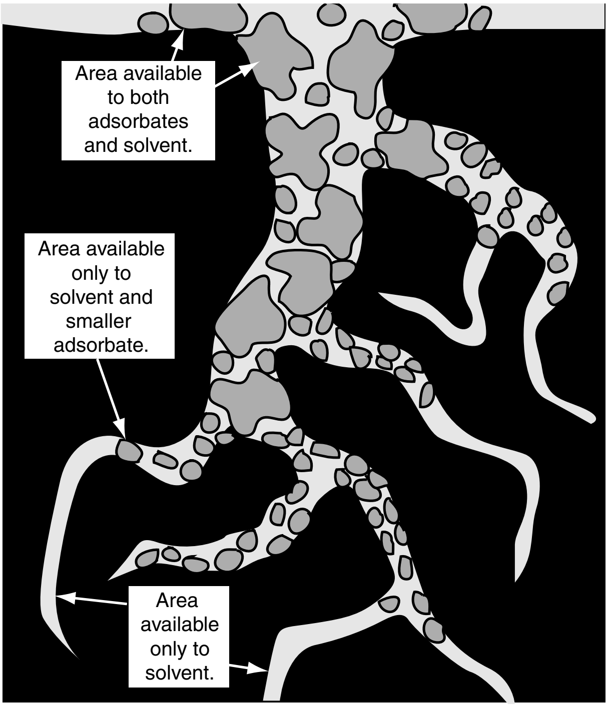

***Figure 2.1*** Macropores and micropores (Barnebey Sutcliffe Corp.).

gas rate and the amount of time allowed before breakthrough is permitted to occur. Breakthrough occurs when the pores are effectively filled with the contaminants or interfering compounds.

The process of activating activated carbon is basically one of opening up its pores. The carbon can be acid-washed then carefully heated in a reducing atmosphere or it can be otherwise treated to open the available pores.

Various adsorbents reflect known pore sizes and exhibit specific areas per unit volume. Application engineers have developed *adsorption isotherms* for various pollutants as they relate to specific adsorbent types. In the family of activated carbons, for example, there are dozens of different carbon types (peanut shell-based, coconut shell-based, mineral carbon-based, etc.), each exemplifying specific pore size and area characteristics. The adsorption isotherms are used to predict the rate of capture of that pollutant in the adsorbent and to therefore anticipate breakthrough.

Figure 2.2 shows a typical adsorption isotherm curve. Adsorption tends to follow the lessons learned earlier about number of transfer units (NTUs) and driving force. The concentration gradient is important in adsorption processes because a large gradient tends to fill pores quickly, thereby reducing the probability of continued adsorption at a high rate. The designer therefore must allow for a sufficient volume of adsorbent, not only for its ultimate capacity prior to breakthrough, but also for the concentration gradient that may exist. If the contaminant exists in high concentration, the volume of adsorbent is increased and the speed at which the gas flows through the adsorbent is decreased.

## Primary mechanisms used

Although the contaminant gas molecule must be fitted to the available pore size of the adsorbent, the mechanism actually holding the molecule onto the adsorbent is believed to be van der Waals and other weak attractive forces.

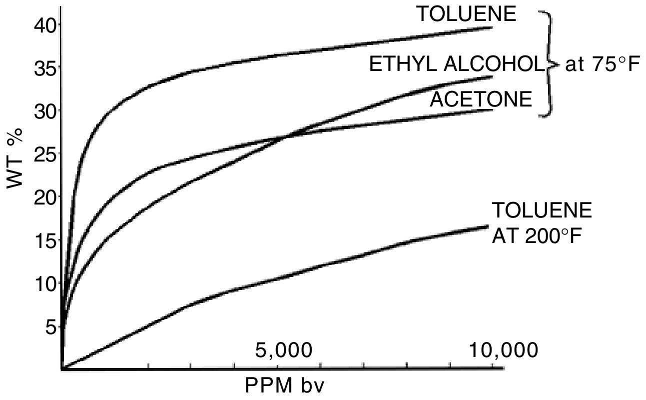

***Figure* 2.2** Adsorption isotherm (Amcec, Inc.).

The adsorption process is more mechanical than chemical. An exception to the latter is chemically treated adsorbents wherein the pores are precharged with a chemical that reacts with the contaminant upon contact.

Given that the contaminant molecules are mechanically attached, they can often be de-attached or desorbed through the application of steam, heated gases, inert gases, or other processes that force the contaminant out of the pores. In this manner, the adsorbent can be regenerated and resused to some extent until the useful life of the adsorbent is reached.

## Design basics

*Adsorbers* are usually either of the throwaway or regenerative type. The throwaway type involves the use of a fixed bed of adsorbent in a containing vessel. These vessels can be either periodically emptied of the adsorbent or the entire chamber with adsorbent can be exchanged for a new one. The adsorbent is either regenerated remotely or is thrown way. In the regenerative type, the adsorbent is regenerated or desorbed in place. This typically involves two chambers that can be isolated. One chamber is actively adsorbing while the other is being desorbed either with steam, hot air, or an inert gas such as nitrogen.

The ancillary equipment includes dampers to swing the contaminant gas stream from one chamber to the other, and isolation valves and controls to administer steam to desorb *in situ*. Some of these designs use an inert gas such as nitrogen for desorption purposes. The desorbed vapors are often condensed and collected or are directed to a thermal oxidizer for destruction. Figure 2.3 shows a multiple chamber adsorber schematic for capture and recovery of solvent-laden air and regeneration *in situ* using steam.

Sometimes, the designer creates a deep bed of adsorbent and installs it in a modular housing. These are popular for point of use volatile organic compound (VOC) control. Equipped with its own fan and pressure drop monitor, the packaged unit is simple to install and operate. When the adsorbent is consumed (breakthrough occurs), the adsorbent housing can be shipped for regeneration off-site. Figure 2.4 shows a packaged, deep bed type adsorption unit.

Adsorber gas velocities are usually very low to reduce the pressure drop of the system. Because the adsorbent particles are close together, their resistance to gas flow is quite high. Gas velocities of 1 to 3 ft/sec or less are common. The bed depth is dictated by the calculated volume of adsorbent needed to operate before breakthrough based upon the adsorption isotherm(s) for the contaminant(s) to be removed. To avoid channeling of gases, multiple beds are sometimes used. Each bed may be 1 to 2 feet thick followed by a vapor space to permit gas redistribution. This low gas velocity means that adsorbers are generally large devices.

A throwaway type (drum) adsorber is shown in Figure 2.5. The adsorbent is precharged in the drum and the drum is designed for off-site regeneration or disposal.

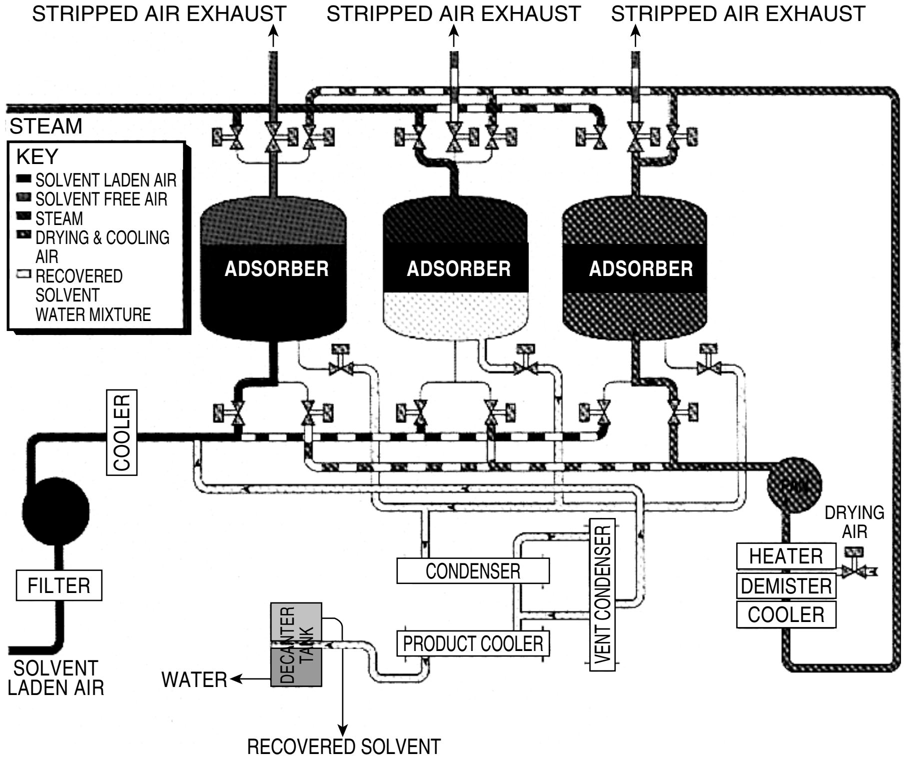

*Figure 2.3* Regenerative adsorber (Barnebey Sutcliffe Corp.).

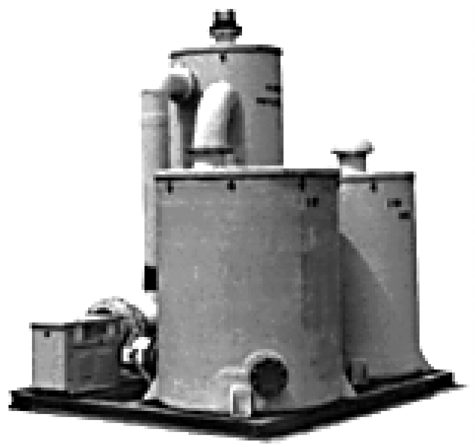

*Figure 2.4* Packaged adsorption unit (Barnebey Sutcliffe Corp.).

*Figure 2.5* Canister type adsorbers (Carbtrol Corp.).

These designs are often used for tank vent emissions control for volatile hydrocarbons where the gas flow rate is 50 to 150 acfm. Upon achieving breakthrough or scheduled replacement, the canister is removed from service, sealed, and shipped to the supplier for off-site regeneration or replacement.

Unfortunately, water and water vapor can be adsorbed as well on most adsorbents (exception: zeolites). The water vapor becomes, in effect, an unwanted contaminant because it takes away adsorbent area that would be better used to collect the real contaminant. To reduce water's effect on the adsorbent, humid gas streams are sometimes reduced in water vapor content by first cooling the gas stream to condense water vapor, then reheating the stream to be well above the water dewpoint. The adsorber housing is then insulated to prevent the water from cooling and reforming a vapor. In low humidity applications, the gas stream is sometimes sent through a bed of gravel or rocks to remove entrained water vapor. Sending the gases through a strong acid scrubber can also dry the gases so that the adsorption process is maximized.

The canister type systems often include a bed of gravel or a separate water trap canister to reduce the carryover of water to the adsorption canister. Others are band heated to keep the gas humidity below the dewpoint. Sometimes heated air is bled into the system to reduce the gas moisture content. The most effective method, however, involves cooling the gases to condense water followed by indirect reheat.

If the contaminant gas easily desorbs and can exceed the lower explosive limit (LEL), the adsorber vessel must be designed for explosion-proof operation. The adsorption process is one of concentrating a dilute gaseous stream so LEL considerations must be taken into account.

The activated carbon type adsorbers are generally used in applications of less than 150°F. For higher temperatures, zeolites are often used.

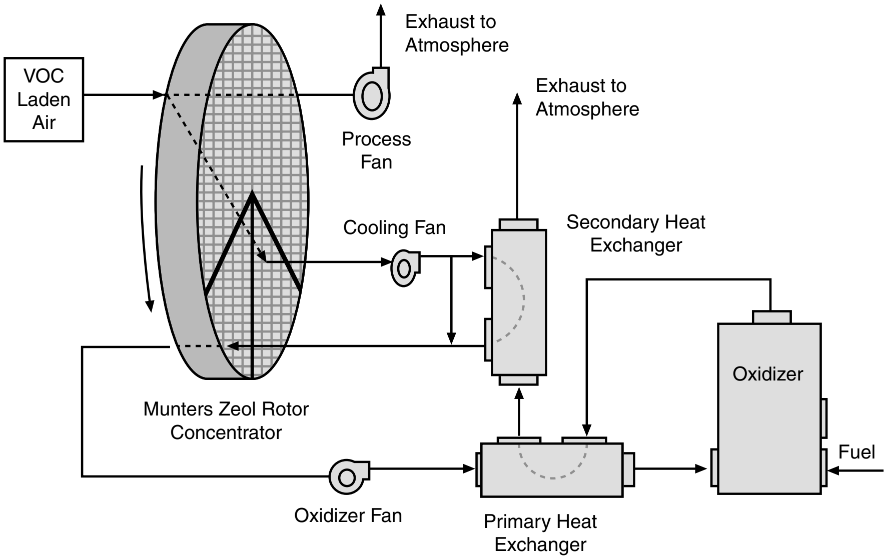

***Figure 2.6*** Zeolite type adsorption concentrator (Munters Zeol).

Zeolites are mineral-based adsorbents that are less affected by water vapor and temperature. Zeolites have been effectively used in rotating wheel type devices as shown in Figure 2.6 and as mentioned in Chapter 1. They are used ahead of thermal oxidizers to concentrate the contaminants in a dilute gas stream to a point where they can economically be thermally destroyed. This concentrator type service reduces the size of the required thermal oxidizer.

Panel type air filters are also available precharged with activated carbon or other suitable adsorbent. Figure 2.7 shows such a panel filter wherein the finely divided carbon is mixed with the filter media itself. In other designs, pelletized carbon fills the space between filter media panels thereby providing some VOC control. These designs are used in room ventilation systems. The adsorbent, the filter media, or both can be pretreated with a biocide to kill bacteria that may also be found in the gas stream. Highly specialized filters such as these are used to protect military personnel who handle mobile vehicles such as tanks and personnel carriers from gaseous weaponry and deadly battlefield smoke particulate.

## *Operating suggestions*

As previously mentioned, water and water vapor should be removed prior to non-zeolite type adsorbers. If regenerative type adsorbers are contemplated, the vendor should be consulted regarding the integration of the adsorber into the process and a thorough economic analysis be performed.

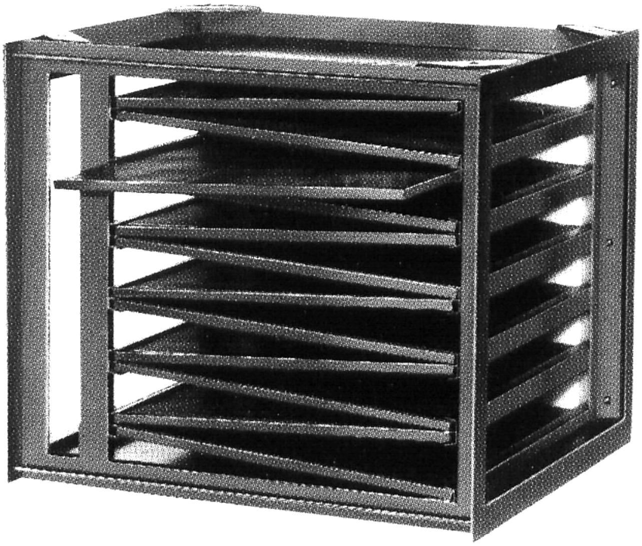

*Figure 2.7* Panel type adsorption filter (Barnebey Sutcliffe Corp.).

On many applications, the use of a regenerative type adsorber can provide significant savings in recovered solvent or chemical.

With the exception of the rotating wheel type adsorber, the capacity of any adsorber slowly decreases from the moment of initial operation. As the adsorption gradually moves to the point of breakthrough, the adsorption efficiency stays relatively constant. For this reason, time or a breakthrough sensor (hydrocarbon analyzer) must be used to determine breakthrough. If batch type adsorbers are used, one must carefully monitor the time between regeneration or replacement, or invest in monitoring equipment that indicates when regeneration or replacement is required.

## chapter 3

# Biofilters

## Device type

*Biofilters* use biologic colonies that reside on a supporting substrate (biomass) and are selected for their ability to produce enzymes that reduce absorbed organic pollutants to less hazardous or less volatile forms. The biofilter itself is a combination of adsorber (the media on which the bacteria colonize provides an adsorption surface) and absorber (the moist biofilm on the media surface absorbs the contaminants).

Biofilters are considered by some to be green technology, that is, environmentally friendly. In reality, the organic chemical action that occurs within a biofilter is often more complex than that of inorganic chemisorption systems.

## Typical applications and uses

*Biofilters* are often used to control the emissions of water-soluble or condensable hydrocarbons (such as alcohols), phenols, aldehydes such as formaldehyde, odorous mercaptans, organic acids, and similar compounds. They are used to control emissions from aerosol propellant manufacture and filling operations, meat processing and packing processes, pharmaceutical manufacture (fermenter emissions), and fish and other food processing sources.

Candidate pollutants that can be controlled by biofilters, in general, must be water soluble because the biodegradation occurs in the moist biofilm layer supported in the biofilter. Aliphatic hydrocarbons are generally more easily degraded than aromatic hydrocarbons. Halogenated hydrocarbons show an increased resistance to this method as their halogen content increases, although some exceptions exist.

A typical biofilter is shown in cutaway format in Figure 3.1. The basic components consist of a humidification system to produce a saturated gas stream (to the lower left), a substrate to support the biomass, a containing vessel, and some means (such as a fan; upper right) to move the gases through the biofilter.

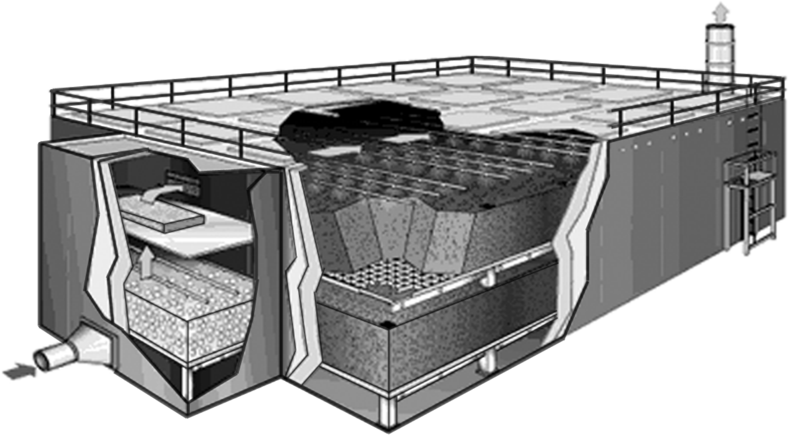

*Figure 3.1* Biofilter (Monsanto Enviro-Chem Systems, Inc.).

Biofilters have also been used to control the emissions of propane and hexane from the filling of aerosol cans. These systems can actually be built into the ground, so the containing vessel becomes the surrounding earth. Buried distribution pipes introduce the contaminated gas beneath the biomass and its support. The gases percolate and diffuse through the biomass layer.

Some meat packing facilities ventilate their meat processing devices (cookers, etc.) into biofilters for odor control. More intense odors are controlled using packed towers, tray towers, fluidized bed scrubbers, and varieties of spray type devices where oxidizing chemicals are used. These devices can be followed by biofilters, however, wherein the latter act as polishers to remove residual pollutants.

Operating efficiencies of 70 to 90% are obtainable with a properly designed unit with higher efficiencies available if extended residence times are economically feasible. These efficiencies, in the United States at least, are often less than the levels required by the regulatory authorities; therefore, biofilters are not as popular here as in other countries.

To be successful, a biofilter must be used under conditions that are conducive both to the viability of the biofilm and to the absorption of the contaminant. Typical biofilters are operated under 100°F and at 100% relative humidity. They usually operate using a preconditioning spray chamber or scrubber to ensure high humidity. Because the resistance to gas flow through a biofilter is significant, they are often very large devices. Sometimes, an entire field containing underground distribution pipes is used to provide an adequately large and stable biomass.

Biofilters are used in applications wherein the gas stream does not contain compounds that are toxic to the bacteria, where the gas stream temperature and humidity can be controlled within a range suitable for sustaining the bacteria colonies, and where the concentration of pollutants is sufficiently

***Table 3.1*** Common Pollutants Recognized as Biodegradable

Atrazine
Acetone
Acrylonitrile
Antracene
Benzene
Benzoic acid
Benzopyrene
Butanol
Butylcellosolve
Carbon tetrachloride
Chlordane
Chloroform
Chrysene
p-cresol
DDT
Dichlorobenzene
Dichloroethane
Dioxane
Dioxin
Dodecane
Ethylbenzene
Ethyl glycol
Heptane
Hexane
Isopropyl acetate
Isopropyl alcohol
Lindane
Methylene chloride
Methylethyl ketone
Methylmethacrylate
Napthalene
Nitroglycerine
Nonane
Octane
Pentachlorophenol
Phenol
PCB
Pyrene
Styrene
Tetrachlororethylene
Trichlorothylene
Trinitrotoluene (TNT)
Vinyl chloride
Xylene

low so that the bacteria colony is not overwhelmed. These conditions vary based on application and bacteria or enzyme selected. Table 3.1 is a list of popular pollutants that are treatable using biologic methods. This table was derived from information from Microbac International, *Bioremediation: A Desk Manual for the Environmental Professional*, by Dennis Schneider and Robert Billingsley (Cahners Publishing), and from the *Handbook of Bioremediation*, by Robert S. Kerr (ed.), (Lewis Publishers).

## *Operating principles*

Bacteria that produce enzymes suitable for the oxidation or reduction of the target pollutant are harnessed to do the work in biofilters. They represent millions of tiny catalytic oxidation sites that in most cases take oxygen in the gas stream and fix it to the pollutant to mineralize it (convert the pollutant to $CO_2$, water, and innocuous residuals). Some particular bacteria strains use their enzymes to cleave organic molecules or extract specific elements (such as sulfur) thereby changing the characteristics of the contaminant molecule.

A number of firms have developed specific bacteria strains and/or enzymes tailored to the control of particular pollutants. If the gas stream can be conditioned to provide an environment wherein this bacteria strain or its enzymes can be sustained, the application is a candidate for biofiltration.

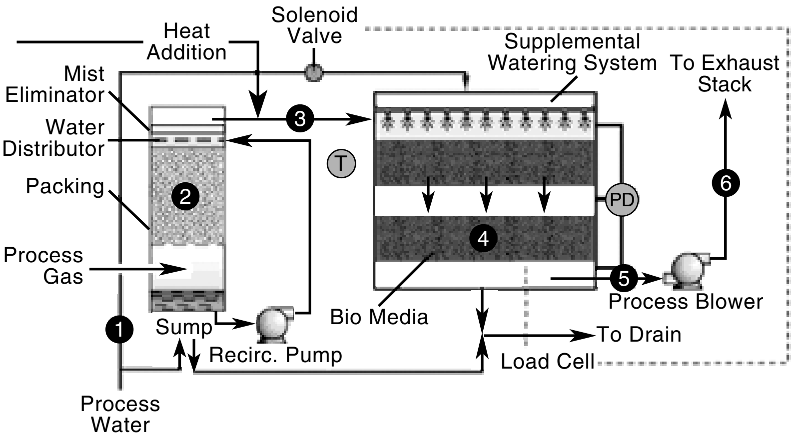

*Figure 3.2* Biofilter components (Monsanto Enviro-Chem Systems, Inc.).

Figure 3.2 shows the basic components of an above-ground biofilter. It consists of a preconditioning and humidification chamber to raise the gas relative humidity to 100%, a gas distribution system or header, large vessel containing a mixture of organic material that both supports the bacteria colonies and provides food, the bacteria dosing system, and a condensate return system.

The mixture of organic material the bacteria in the biofilter adhere to is called *biomass*. This biomass may be cellulose or similar wood-based material, peat, carbon (or charcoal), straw, waste organic material, or plastic material (like scrubber packing) or mixtures thereof designed to support the bacteria colonies. Generally, a thin wetted layer called a *biofilm* is formed throughout this media thereby extending the film's surface area (this is akin to the use of packing in a packed tower). Because the bacteria usually enjoy a warm, moist environment, the humidification spray is used to prevent the biomass from drying out, thereby killing the bacteria. These reactions occur in a moist environment in the biofilm; therefore, the pollutant must be soluble in water and be absorbed.

The contaminant gas is absorbed into the moist biofilm and enzymes secreted by the bacteria reduce or oxidize the contaminant. Given adequate time, the hydrocarbons are converted to carbon dioxide and water vapor. In some cases, they are converted to methane gas, much as in a biologic water treatment system.

In some biofilters, the specific enzyme has been extracted remotely and a concentrated solution of that enzyme is used to coat a supporting media (such as cellulose gauze). The enzyme fixes oxygen in the air to the hydrocarbon thereby oxidizing it without depletion of the enzyme itself. In this way, the enzyme is considered to catalyze the oxidation of the contaminant. Figure 3.3 shows a compact gas cleaning device using an enzyme solution supported on a gauze type media.

***Figure* 3.3** CAP™ "Clean Air Plant" compact biofilter (SRE, Inc.).

## *Primary mechanisms used*

Absorption is the primary mechanism for the movement of the contaminant from the gas phase into the biofilm. Biologic oxidation occurs using enzymes (called oxygenases). This is the key mechanism for the oxidation of the contaminant once it is absorbed. Enzymes in the bacteria strain act as catalysts to fix oxygen to the contaminant, thereby oxidizing the latter. Some bacteria strains fix other chemicals to the contaminant where a reducing reaction follows. They basically extract a portion of the contaminant, for example sulfur in a mercaptan odor, changing the odorous compound's structure.

For long-chain hydrocarbons, a stepwise cleaving process can occur. Over time, the secreted enzymes break the hydrocarbon chain into smaller components that eventually result in $CO_2$ and water. These processes occur naturally in the environment. In the biofilter, conditions are created and maintained to make these processes occur more rapidly.

The gases typically mix through diffusion because the gas velocities are very low (to reduce pressure drop as well). Impaction and interception are minor in a biofilter given the extremely low vapor velocities at which these devices operate.

## *Design basics*

In mechanical function, biofilters can be compared to packed towers. The biomass support media is the packing and the biofilm is the absorbing liquid. In

*Figure 3.4* Modular biofilter (Envirogen).

the case of biofilters, however, the biofilm is stationary. It is attached to the support media. The gas, therefore, is caused to move slowly through the biomass so that the contaminant gas can diffuse over to the biofilm surface, and time is allowed for the gas to penetrate the biofilm surface. As a result, gas velocities are under 1 to 2 ft/sec. Biofilters therefore are usually large devices.

They need not be unsightly, however. Figure 3.4 shows an above-ground biofilter, the housing of which has been designed for function and appearance.

This design is built in modular components to reduce costs and speed installation time. The upper vessel is made from fiberglass-reinforced plastic (FRP) and is sloped to allow for strength and draining of snow and rain. It sits on a lined concrete basin, which provides structural support and houses the gas distribution system.

Because the bacteria strains that are used are living organisms, they require a suitable living environment to survive. This usually results in a requirement of humidifying and sometimes heating or cooling the gas stream within a narrow operating window to suit the bacteria strain used. Inlet relative humidities are usually above 95% and the temperatures are 60 to 110°F. Reduced moisture can dry out the biomass and excessive temperatures can kill the bacteria. The pH is usually 6 to 8, although some bacteria strains can function at a pH of 4 to as high as 10.

The device also must be designed to be replenished. Access doors must be provided but adequate pull space must also be provided because biofilters are often bulk loaded with biomass support material that is dumped into place and distributed. For this reason, above-ground biofilters often are configured with driveways next to them allowing for mechanical removal and replacement of the substrate into dump trucks or other hauling devices.

## *Operating suggestions*

It should be clear from the previous comments that biofilters must be operated within their thermal and humidity window. Care should be taken to provide a reliable supply of humidification water and supply a suitably insulated vessel if cold environments are to be encountered.

For hard water, the use of softened water in the humidification system may be advised to reduce nozzle plugging. If a packed type humidification device is used, periodic checks should be made regarding the packing condition. The packed zone's pressure drop should be monitored and the packing replaced if the pressure drop rises above the vendor's prescribed figure.

The condensate from the biofilter should be accumulated and, if recycled, excessively large solids sent through a strainer or filter to prevent nozzle plugging. If the humidification system is lost, the biofilter can be lost.

It is not uncommon with biofilters to experiment with various bacterial cultures and substrates. In part, this may reveal the art side of the science. The reality is that certain bacterial cultures respond to specific pollutants. When a mixture of pollutants is present, problems can result. Patience is therefore an asset if one is trying to tackle a multiple pollutant stream.

It is suggested that the temperature of the post-humidification section and the bed temperature should be monitored. The post-humidification section should be at the wet bulb temperature or within 2 to 3°F thereof. This indicates near saturation. The bed temperature reflects the bacterial living conditions. The bacteria culture supplier will have a design range within which to operate.

Aside from the service accessibility issues and preconditioning requirements mentioned previously, the biofilter can be operated as any other absorber.

# chapter 4

# Dry cyclone collectors

## Device type

Dry, cyclonic separators disengage entrained dust from a carrying gas stream. Often called *cyclone collectors, multicyclones, cyclones, cyclonic separators, cyclonic dust collectors*.

## Typical applications and uses

Cyclone collectors are used for product recovery of dry dusts and powders and as primary collectors on high dust loading (more than 2 to 5 grs/dscf) air pollution control applications.

A common application is the rotary dryer. Used to dehydrate various products from grain to manure, direct or indirect fired rotary dryers often use cyclone collectors to capture the entrained dust prior to a secondary collector (such as a Venturi scrubber). The rotating action of the dryer entrains a portion of the product as the product tumbles through the hot, drying air. This product is often valuable in dry form so the cyclone is used to disengage the dust from the gas stream and be recovered. The residual dust is air-conveyed to the downstream device.

Figure 4.1 shows a large diameter cyclone collector attached to a gas-fired rotary dryer for agricultural product recovery. The cyclone is the large white vessel in the center of the photograph.

Another application is on woodwaste or bagasse (sugar cane) boilers where light entrained ash can be collected in suitably designed cyclones. On woodwaste applications, smaller diameter cyclones are often used in "banks" where each cyclone handles less than 1000 acfm of flue gas. These are called *multiple cyclone collectors*.

One of the most common uses of cyclones is to protect fans from abrasive dusts. Many dust-producing process applications operate under induced draft. Placing a well-designed cyclone collector ahead of the fan helps protect the latter from abrasive wear and improves the operating life of the fan. If the cyclone alone cannot meet emissions guidelines, another type device may be used after the fan.

***Figure 4.1*** Rotary dryer and cyclone (Duske Engineering Co., Inc.).

Cyclones are also used to collect trim from paper machines. The edges of the formed paper are trimmed to size using knives and the edge is air conveyed in a continuous ribbon of paper back to a cyclone, then repulped in other equipment and returned to the paper-making process.

Other uses are sawdust collection, separation of air entrained product from pneumatic conveying systems, primary separation in vacuum cleaning systems, fiber separation, and similar applications where the particulate is heavy enough to be influenced by centrifugal forces.

Dry cyclones are *not* generally used on particulate that is under 5 μm aerodynamic diameter because these size particles (about one tenth the diameter of a human hair) resist inertial separation.

## *Operating principles*

One step up the "complexity ladder" from settling chambers is the family of dust separation devices known as cyclone collectors. These devices primarily use centrifugal force (inertial separation) to "spin" the entrained particulate from the carrying gas stream. To a lesser extent, they can be considered to be settling chambers wrapped in a cylindrical shape to save space.

The gas stream is typically directed into a cylindrical portion of the device so that a spinning motion is created and sustained for a required number of turns or revolutions to achieve the desired separation. Some designs use a single tangential gas inlet; others use fixed vanes that impart rotational forces to the gas stream. As the gas spins (Figure 4.2), the higher specific gravity dust is thrown outward toward the containing vessel wall where it accumulates and slides down the wall surface into a receiving

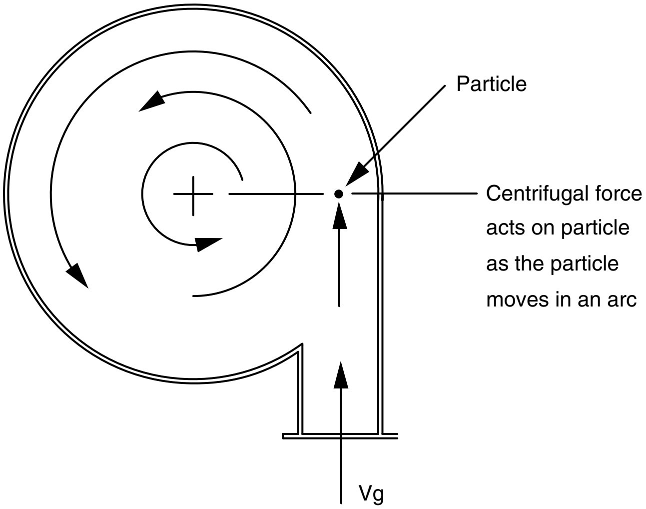

*Figure 4.2* Cyclonic separation.

chamber, usually a hopper or other essentially quiescent zone, where the dust accumulates out of the moving gas stream. The dust is usually discharged through a trickle valve or motorized lock/feeder that prevents air leakage or infiltration while allowing the dust to exit.

The typical cyclone includes the following components as seen in Figure 4.3. A tangential gas inlet is used (sometimes incorporating a curved "involute" section) to gradually direct the gas stream for smooth tangential release into the cyclone body. The cyclone body itself is typically a vertical walled cylinder. The tapered hopper and disengaging section are used to accumulate and separate the dust. The vortex finder (or gas outlet tube) is used to control the ascending vortex. The outlet involute is used to increase the radius of rotation and slowly slow the spinning gas stream so that the ascending vortex stability is maintained.

In general, the more spin cycles or turns imparted to the gas stream, the greater the separation efficiency. Cyclone collector housings are therefore designed to provide varying number of spins or turns, depending on the application.

A limiting factor, however, is the friability of the particles (dust) themselves. A highly friable dust is one that easily breaks down into smaller, more difficult to collect, dust particles as they rub together. Because a cyclone collector inherently throws the dust close together near the vessel wall, the interaction between the particles becomes critical in the design. A limit can be reached wherein the spinning of the dust stream and the friable nature of the dust achieves equilibrium and no more dust can be separated.

Because an inertial force is used (centrifugal force and its reaction force), the particles most influenced by cyclonic action are quite large. Generally, low friability particles over 5 μm aerodynamic diameter may be best separated

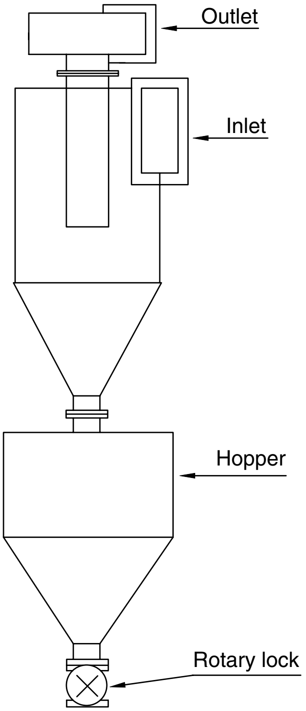

*Figure 4.3* Basic cyclone collector components.

using centrifugal force. Sand particles, for example, are relatively easy to separate with a dry cyclone. Starch, fly ash, and other powders that tend to size reduce are more difficult to remove with cyclones alone therefore cyclones are often followed by additional pollution control devices on those applications.

## *Primary mechanisms used*

Centrifugal force and, to a lesser extent, settling are the forces used in cyclone collectors.

Contradicting forces and effects are same-charge electrostatic forces that could inhibit separation as well as the friability of the particles themselves. Some particulate acquires a charge as it passes through ductwork or a cyclone (piezoelectric effect) thereby making separation more difficult. If the particulate or dust becomes reduced in size, it makes it more difficult to collect because the effective centrifugal force applied to the particle is a function of its mass.

## *Design basics*

Cyclone collectors can be grouped into two general types. The first is the conventional *dry cyclone* and the second is the *multicyclone*. The former is

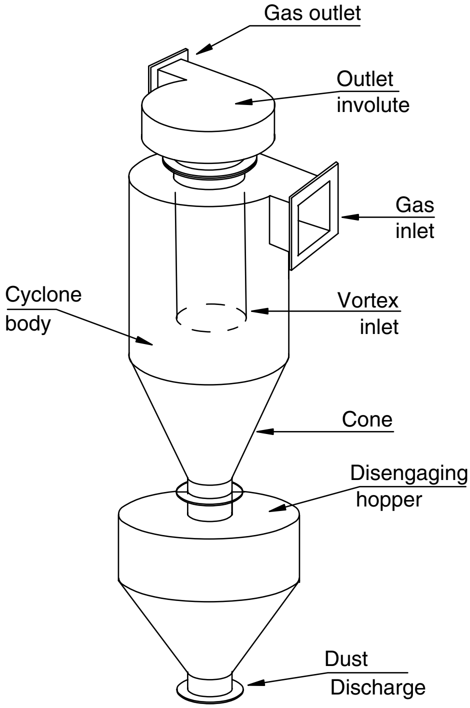

*Figure 4.4* Dry cyclone (Bionomic Industries Inc.).

characterized by a relatively large housing with a tangential gas inlet and top central gas outlet and the latter usually is configured with multiple rows of identical, individual, smaller diameter cyclones. The cyclones of the multicyclone collector are often made from castings whereas the conventional dry cyclone is usually made from sheet or plate metals.

The conventional dry cyclone is a relatively simple device. Experience has shown that keeping them simple is the best formula for success. To accommodate various gas volumes, they are often grouped in pairs, quads, or even greater numbers.

The gas inlet velocity is usually at or above the conveying velocity of the particular dust being separated. Velocities of 40 to 65 ft/sec are common. The inlet is often rectangular in shape so that the gas enters in wedge form at the tangent line of the cyclone. The width of the inlet is approximately one half the height of the inlet. If the dust is highly friable or abrasive, a velocity toward the lower velocity range is used. If the dust is both heavy and abrasive, a higher velocity must be maintained so wear plates or even refractory linings are suggested at the gas inlet. The cylindrical body tube length in part dictates the number of turns and the turning radius (tube diameter) controls the centrifugal force created at a given gas velocity. The higher the gas tangential velocity, the greater the number of turns, the higher the centrifugal force and the greater the separation.

The cylindrical body length is usually two to three times the body diameter.

The gas outlet velocity is usually 55 to 65 ft/sec and sometimes higher. This vortex finder or outlet tube usually extends down into the cylindrical body portion far enough to prevent dust from short-circuiting from the gas inlet to the outlet tube. An ascending vortex is formed in this tube that turns opposite in direction to the inlet spiral. On cyclones with high tangential inlet velocities (greater than 100 ft/sec), the outlet tube can also be equipped with turning vanes that control the gas swirl. The gas outlet diameter is often approximately one half the cylindrical vessel diameter. Care is taken to avoid having the outlet tube extend down too far into or near the conical section of the collector. If it does, dust near the wall will be drawn back up the outlet tube lowering the efficiency. The outlet tube length is usually about 1.2 to 1.5 times the height of the gas inlet.

The tapered or conical portion of the cyclone should be smooth. It is usually made using multiple brake settings if made of metal. If the taper is dented or bumpy, re-entrainment of dust can occur. The taper usually has an angle of at least 60 degrees from the horizontal. This angle exceeds the angle of repose of most dusts; therefore, bridging at the dust outlet can be reduced.

The gas outlet tube is sized for the expected dust flow rate and allows for a dust velocity of about 4 to 8 ft/sec.

Multicyclone collectors are sized in a similar manner; however, a series of standard tubes are used. Each tube is designed for a given cubic feet per minute of gas flow, then multiple rows are used to accommodate the design gas flow. Tube volumes of 500 to 1000 acfm each are common. This results in tubes of 9- to 12-inch inside diameter for many applications. Figure 4.5 shows a multicyclone collector in cut away. Notice the tubes are mounted on a flat tubesheet and the outlet tubes are of varying length. The gas enters from the back of this particular view and exits out the top.

You can also see the vane section. Figure 4.6 shows this more clearly. The vanes look much like a turbine vane and are either cast as part of the tube or are separate pieces fitted into the tube. Quite often, a gas outlet vane is also used to enhance separation and to discharge the finer dust separated in the gas outlet tube.

The multiple cyclone collector works by causing the contaminant particle to move at high speed constrained by the limited radius of the individual tube. The centrifugal force moves the particle to the tube surface where it accumulates and drops by gravity down to the collecting hopper. To reduce short-circuiting of dust in the tube, a special outlet tube is used, often with vanes that impart a rotation to the ascending gas stream. Figure 4.7 shows the basic operating principles of the multiple cyclone.

## *Operating/application suggestions*

The proper application of a cyclone collector starts with a knowledge of the type of dust being collected and its concentration.

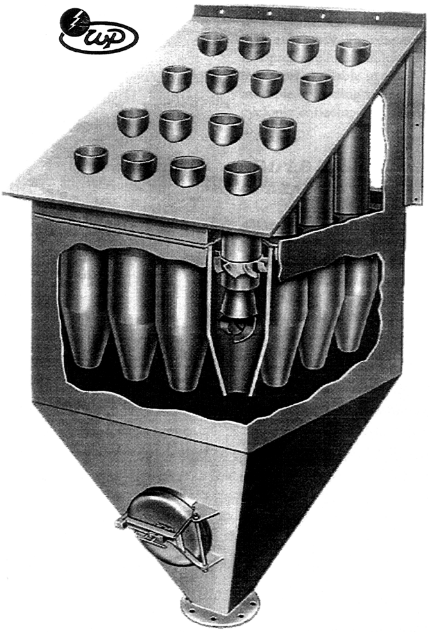

*Figure 4.5* Multicyclone (Allen-Sherman-Hoff).

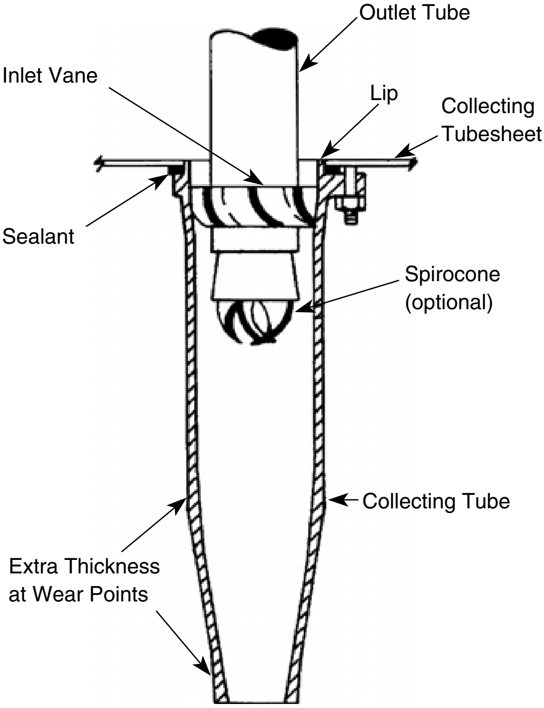

*Figure 4.6* Components of typical tube (Allen-Sherman-Hoff).

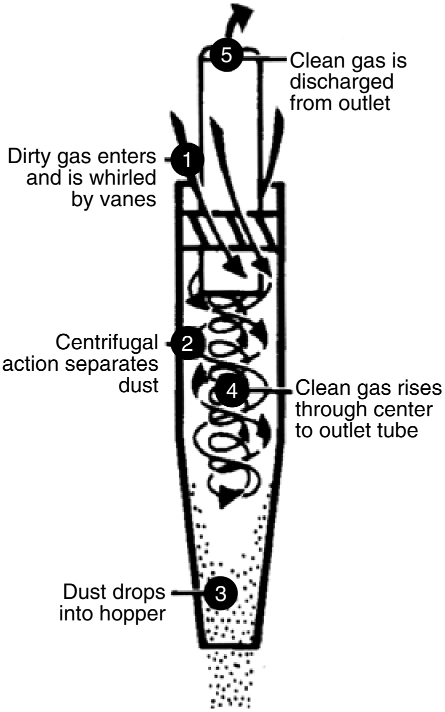

*Figure 4.7* How a multiple cyclone works (Allen-Sherman-Hoff).

Cyclone designers have accumulated data on a variety of dusts and their characteristics. Some dusts are spherical and others are fissured. Some particulate is oblong in shape. These characteristics affect their collectibility using centrifugal force.

To make life easier, particulate is often characterized by its aerodynamic rather than physical diameter. The aerodynamic diameter can be considered to be its real world effective diameter vs. its actual physical characteristics as they would appear in, for example, a photograph. The aerodynamic diameter is obtained using a particle sizing device such as the cascade impactor, which separates particulate by size in accordance with their aerodynamic behavior.

Cyclone collector designers use the aerodynamic characteristics and loading to select the appropriate cyclone(s). If the dust loading is very high and the particulate is friable, for example, the designer may use a larger diameter cyclone with reduced turning radius. Often, cyclones are used in stages or groups where the gas flow is split into multiple streams and the separation conducted under more controlled conditions where the dust layer at the wall is thinner. Figure 4.8 shows a sketch of a multiple or dual cyclone. These units often share a single dust collection hopper and single rotary lock or discharge valve.

On multicyclone units, a condition called *hopper recirculation* can occur that reduces efficiency. When this condition exists, some dust-laden air goes into

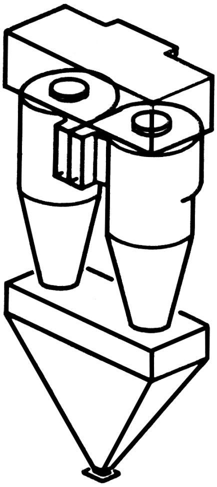

*Figure 4.8* Dual cyclone on common hopper (Bionomic Industries Inc.).

the inlet tube of one cyclone and short circuits up the discharge tube of another cyclone. The telltale sign is usually an accumulation of dust immediately above the offending tube's gas discharge pipe. This often occurs when the defective cyclone's inlet vanes are broken or if the tube housing itself fails. When inspecting the interior of a multicyclone collector, look for these deposits. The offending tube can often be replaced without affecting its neighbors.

To allow the dust to exit the collecting hopper, a valve must be used to allow dust out but keep air from entering. Trickle valves and rotary locks are commonly used for this service (some cyclones in batch operation service use drum fittings that seal directly onto a receiving drum).

Trickle valves have counterbalanced plates inside of their housings that allow a measured weight of dust to discharge without allowing gas to enter or escape. One such single plate trickle valve is shown in Figure 4.9. Counterweighted double stage valves are also often used to reduce air infiltration. The external counterweight applies pressure to an internal plate that seals in the dust until the weight of the dust above the plate is sufficient to overcome the force of the counterweight. The dust momentarily caught between the counterweighted plates acts as an additional sealing medium.

A very common problem for any cyclone is excessive gaps in the rotary lock or trickle valve, allowing ambient air to be drawn into the cyclone hopper (if the cyclone operates under induced draft), which acts as an air lift to jettison the dust out of the collector. To mitigate this, rotary locks using adjustable end plates and rotor seals are used. With use of a motorized air lock, the end plate is constantly pressed against the rotating sealing vane in the device, thus reducing air leakage. These locks should be periodically inspected and adjusted as required, but are often neglected given the dusty environment in which they must operate. It is literally a dirty job but someone has to do it.

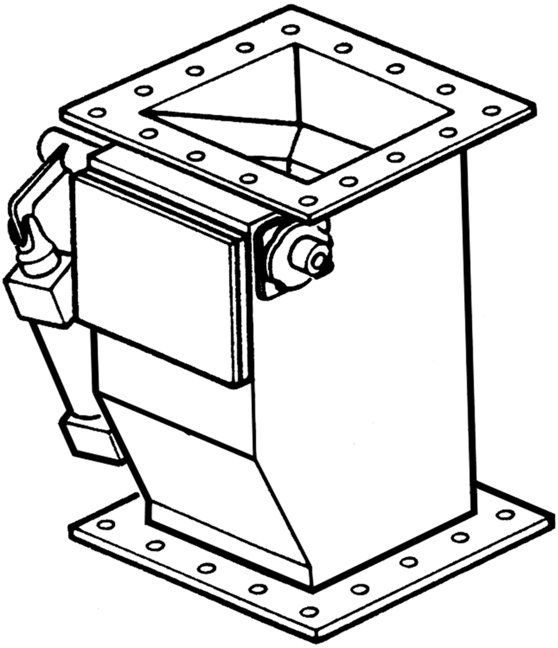

*Figure 4.9* Trickle valve (Bionomic Industries Inc.).

Most cyclones must be installed vertically because their operation relies on stable, controlled vortices that Mother Nature (and the Laws of Physics) tells us operate best vertically. The ascending vortex that forms should be symmetric with the cyclone body; otherwise, an imbalance in the rotational forces can occur. If this happens, dust from the cyclone body can be vacuumed out the outlet tube, causing a reduction in efficiency.

Another common problem is using an elbow immediately after the cyclone. The elbow can sometimes upset the spinning action of the ascending vortex causing an imbalance. At least two diameters of straight ductwork at the cyclone discharge before the elbow usually solves the problem. Dry cyclones often use the involute type outlet box to reduce these imbalances and produce a stable ascending vortex.

Excessive dust levels in the cyclone hopper can cause serious problems. Consider the spinning gases as a confined tornado inside the vessel. If you let the tornado touch down on the accumulated dust, the vacuuming action can lift the dust up and out of the collector. Some facilities use bin detector devices to monitor the hopper dust level and actuate the rotary lock or trickle valve (above) to keep the level low enough to prevent touchdown.

For highly abrasive dusts, replaceable inlet scroll wear plates are often used. Made of abrasion-resistant plate, they help reduce the erosive effects of such particulate.

In multicyclone collectors, a dust recirculation pattern can occur inside the cyclone modules. Gas (and dust) can migrate from tube to tube depending upon the differential pressure across the tubes. This can be mitigated by increasing the differential pressure between the hopper chamber and the clean air plenum. This is accomplished by pulling a draft on the hopper air space and directing the gas flow to a baghouse or other external dust-collecting devices.

Properly designed cyclone collectors are effective devices for the recovery of dry products and as primary collectors for subsequent additional air pollution control stages.

## chapter 5

# Electrostatic precipitators*

## Device type

Electrostatic precipitators are used for the purpose of removing dry particulate matter from gas streams. They basically apply an electrostatic charge to the particulate and provide sufficient surface area for that particulate to migrate to the collecting plate and be captured. The collecting plates are rapped periodically to disengage the collected particulate into a receiving hopper.

## Typical applications and uses

Dry electrostatic precipitators are used to remove particulate matter from flue gas streams exiting cement kilns, utility and industrial power boilers, catalytic crackers, paper mills, metals processing, glass furnaces, and a wide variety of industrial applications.

An electrostatic precipitator is a constant pressure drop, variable emission particulate removal device offering exceptionally high particulate removal efficiency.

There is a unique jargon involving electrostatic precipitators. If you contemplate purchasing or studying the use of one, perhaps the following buzzword list will prove helpful. It is in alphabetical order so if you see a word that you do not understand, just jump down the list to find the offending word.

*Air splitter switch*: An air splitter switch is mounted at the high voltage bushing contained on the transformer rectifier. The purpose of the switch is to isolate one of the two electrical sections served by the transformer rectifier while the other operates.

*Anti-sneak baffle:* A deflector or baffle that prevents gas from bypassing the treatment zone of the precipitator.

*Arc*: Arcs occur within the high voltage system as a result of uncontrolled sparking. Measurable current flow is detected, damage will occur to internal components.

---

* This chapter is contributed by Bob Taylor, BHA Group, Inc., Kansas City, Missouri.

***Figure 5.1*** Typical electrostatic precipitator in operation (BHA Group, Inc.).

*Aspect ratio*: The treatment length divided by treatment height. A higher number is more favorable for collection efficiency.

*Back corona*: Occurs in high resistivity dust applications. As a result of the dust resistivity, a voltage drop occurs across the layer of dust on the collecting plates. The application of current to the field builds the charge on the surface of the dust layer until the break down voltage of the dust is achieved. At this point a surge of current occurs from the surface of the dust to the collecting plate causing localized heating of the dust. The dust explodes back into the gas stream carrying a charge opposite to the electrons and gaseous ions. This causes collection efficiency to degrade and dust re-entrainment to increase.

*Bus section*: Smallest isolatable electrical section in the precipitator.

*Casing*: Gas tight enclosure within which the precipitator collecting plates and discharge electrodes are housed.

*Chamber*: Common mechanical field divided in the direction of gas flow by a partition. The partition is either a gas tight wall or open structural section.

*Cold roof*: This is the walking surface immediately above the hot roof section.

*Collecting surface*: Component on which particulate is collected. Also known as collecting plate or panel.

*Corona discharge*: The flow of electrons and gaseous ions from the discharge electrode toward the collecting plates. Corona discharge occurs after the discharge electrode has achieved high enough secondary voltages.

*Current limiting reactor*: This device provides a fixed amount of inductance into the transformer rectifier circuit. Some current limiting reactors have taps that allow the amount of inductance to be varied manually when the circuit is not energized.

*Direct rapping*: Rapping force applied directly to the top support tadpole or lower shock bar of a collecting plate.

*Discharge electrode*: The component that develops high voltage corona for the purpose of charging dust particles.

*Disconnect switch*: A switch mounted in the high voltage guard or transformer rectifier that allows the electrical field to be disconnected from the transformer rectifier.

*EGR*: Electromagnetic impact gravity return rapper used for cleaning discharge electrodes, collecting plates, and gas distribution devices. An electromagnetic coil when energized raises a steel plunger which is allowed to free fall onto the rapper shaft after the coil is de-energized.

*Electrical bus*: The electrical bus transmits power from the transformer rectifier to each electrical field. Generally fabricated from piping or tubing.

*Electrical field*: An electrical field is comprised of one or more electrical sections energized by single transformer rectifier. A single voltage control serves the electrical field.

*Gas distribution device*: A gas distribution device is any component installed in the gas flow for the purpose of modifying flow characteristics.

*Gas passage*: The space defined between adjacent collecting plates.

*Gas passage width*: The distance between adjacent collecting plates. Consistent within a mechanical field, but can vary between fields contained in a common casing.

*Gas velocity*: Gas velocity within a precipitator is determined by dividing total gas volume by the cross-sectional area of the precipitator.

*Ground switch*: A device mounted in the high voltage guard or the transformer rectifier for the purpose of grounding the high voltage bus. This does not disconnect the field from the transformer rectifier.

*High voltage guard*: High voltage guard surrounds the electrical bus. Generally fabricated from round sections that provide adequate electrical clearances for the applied voltages.

*High voltage support insulator*: The ceramic device fabricated from porcelain, alumina, or quartz that isolates the high voltage system from the casing. Typically a cylindrical or conical configuration but some manufacturers use a post type insulator.

*Hopper*: A casing component where material cleaned from the discharge electrodes and collecting plates is collected for removal from the system. Can be pyramidal, trough, or flat bottom.

*Hot roof*: Comprises the top gas tight portion of the casing.

*Insulator compartment*: An enclosure for a specific quantity of high voltage support insulators. Typically contains one insulator but may contain several. The insulator compartment does not cover the entire roof section.

*Key interlock*: A key interlock system provides an orderly shut down and start up of a precipitator electrical system. A series of key exchanges connected to de-energizing equipment eventually provides access to the internals of the precipitator.

*Lower frame stabilizer*: A lower frame stabilizer frame controls electrical clearances of the stabilizer frame relative to the mechanical field. This device typically contains an insulator referenced to the hopper, casing, or collecting plate and attached on the other end to the stabilizer frame.

*Mechanical field*: This is the smallest mechanical section that comprises the entire treatment length of a collecting plate assembly and extends the width of one chamber.

*Migration Velocity*: The velocity at which the particulate moves toward the collecting plate. Measured in either feet per second or centimeters per second.

*Normal Volume*: This is the normalized condition when using metric measurements.

*Opacity*: An indication of the amount of light that can be transmitted through the gas stream. Measured as a percent of total obscuration.

*Partition Wall*: Divides adjacent chambers in a multiple chamber precipitator. Can be gas tight, but also can be a row of supporting columns.

*Penthouse*: An enclosure that houses the high voltage support insulators. Typically covers the entire roof section of the precipitator casing. This is a gas tight enclosure that cannot be entered when the precipitator is operating.

*Perforated plate*: A perforated steel plate typically 10 gauge, that is placed perpendicular to gas flow for the purpose of re-distributing the velocity pattern measured within the precipitator. The perforation pattern is typically not uniform across the panels providing specific flow patterns.

*Primary current*: The current provided at the input of a transformer rectifier. It will be measured in alternating current (AC) amps.

*Primary voltage*: The voltage provided at the input of a transformer rectifier. It will be measured in AC volts.

*Purge heater system*: Intended to provide heated, pressurized, and filtered air into the insulator compartments or penthouse. An electric heater element or sometimes steam coil heats air that has been drawn through a filter by a blower. The conditioned air is then distributed into the support insulators.

*Rapper*: A device responsible for imparting force into a collecitng plate or discharge electrode for the purpose of dislodging dust.

*Rapper insulator shaft*: An insulator shaft that isolates the high voltage rapping system from the casing. Can be fabricated from any material with high dielectric, but typically use porcelain, alumina, or fiberglass-reinforced plastic.

*Rigid discharge electrode*: A discharge electrode that is self-stabilizing from the high voltage frame down to the stabilizer frame. Typically constructed from tubular or roll formed material. Individual emitter pins or other corona generators are affixed to the surface for the purpose of generating high voltage corona.

*Rigid frame*: Rigid frames are associated with tumbling hammer type precipitators. A rigid frame that encompasses the entire gas passage area is provided for the purpose of support individual discharge electrodes.

*Saturable core reactor*: Sometimes also called an SCR, this is an antiquated method of providing inductance into the transformer rectifier circuit. The saturable core does vary impedance, but is extremely slow to react and introduces distortion into the wave form. Replaced by the current limiting reactor.

*Specific collecting area*: Specific collecting area is the total amount of collecting plate area contained in a precipitator divided by the gas volume treated. When referenced to a common gas passage width, values for specific collecting area can be compared to define relative capability of precipitators.

*Silicon control rectifiers*: Silicon control rectifiers are the switches that control power input to the electrical field. The voltage control turns the silicon control rectifier on and off based on the sparking occurring within the field.

*Secondary current*: Current measured at the output side of a transformer rectifier. It will be measured in DC milliamps.

*Secondary voltage*: Voltage measured at the transformer rectifier output. It is measured in DC kilovolts.

*Spark*: A spark within a precipitator occurs between the high voltage system and the grounded surfaces. There is a minimum of current flow during a spark, as a result internal components are not damaged. Sparking is the method by which voltage controls determine the maximum usable secondary voltage that can be applied to an electrical field.

*Transformer rectifier*: A device to rectify the AC input to DC and step up the voltage to the required level. A single voltage control serves each transformer rectifier.

*Treatment length*: Total length of all mechanical fields in the direction of gas flow.

*Treatment time*: Treatment time or retention time is calculated by dividing the treatment by the gas velocity.

*Tumbling hammer rapping*: A rapping system utilizing a series of hammers mounted on a shaft common to a mechanical field. When the shaft rotates or drops, the hammers strike an anvil connected to the collecting plates or high voltage frames.

*Turning vane*: Turning vanes are installed within ductwork or precipitator inlet and outlet transitions to direct flow to a specified position.

*Voltage control*: A voltage control serves a single transformer rectifier for the purpose of maximizing power input to the electrical field that it serves.

*Weather enclosure*: This is a weatherproof enclosure over the top of a precipitator for the purpose of facilitating maintenance during adverse weather. It is not for the purpose of isolating high voltage electrical sections.

*Weighted wire*: A discharge electrode fabricated from wire that is tensioned by a cast iron weight.

In an effort to make sense of these terms, the following illustrations indicate some of the terms for standard configuration electrostatic precipitator components. Figure 5.2 shows a complete electrostatic precipitator. The cutouts show specifics that will become clearer The details shown will become more obvious as we look more deeply at selected components. Figure 5.3 shows better detail of a single field. Note the detail of the rapper tranes. The rappers that clean the collecting plates are configured differently than those for the high voltage system. The collecting rapping system is shown in Figure 5.4 and the high voltage rapping system is shown in Figure 5.5.

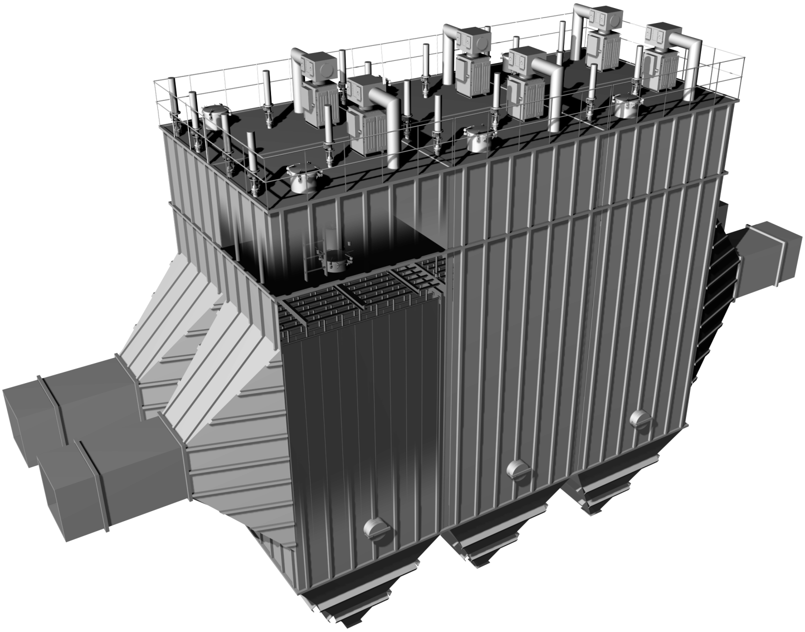

***Figure 5.2*** Complete electrostatic precipitator (BHA Group, Inc.).

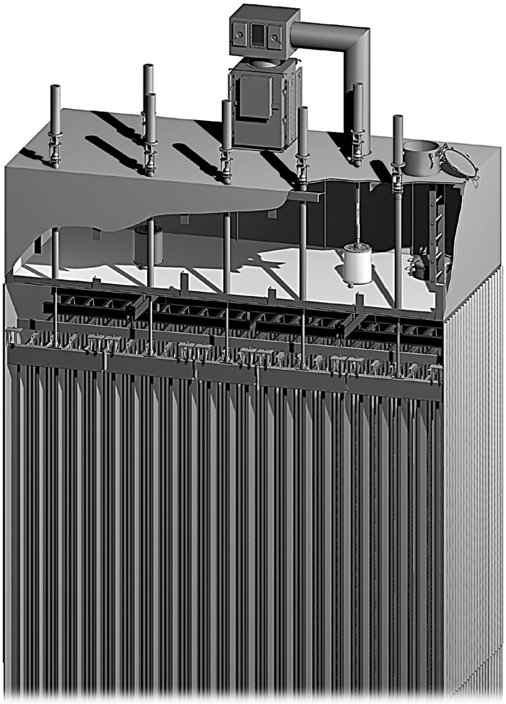

*Figure 5.3* Exploded detail of single field (BHA Group, Inc.).

## *Operating principles*

The basic principle of an electrostatic precipitator is to attract charged dust particles to the collecting plates where they can be removed from the gas stream.

Dust entering the precipitator is charged by a corona discharge leaving the electrodes. Corona is a plasma containing electrons and negatively charged ions. Most industrial electrostatic precipitators use negative discharge corona for charging dust.

When charged, the dust particles are driven toward the collecting plates by the electromagnetic force created by the voltage potential applied to the discharge electrodes. An electrostatic precipitator contains multiple mechanical fields located in series and parallel to the direction of gas flow. Each mechanical field is comprised of a group of collecting plates that define a series of parallel gas passages. These passages run in the direction of gas flow. Bisecting the gas passage are a series of discharge electrodes, also running in the direction of gas flow.

A mechanical field contains one or more electrical fields. A single transformer rectifier serves each electrical field. There can be multiple electrical sections contained in a single electrical field.

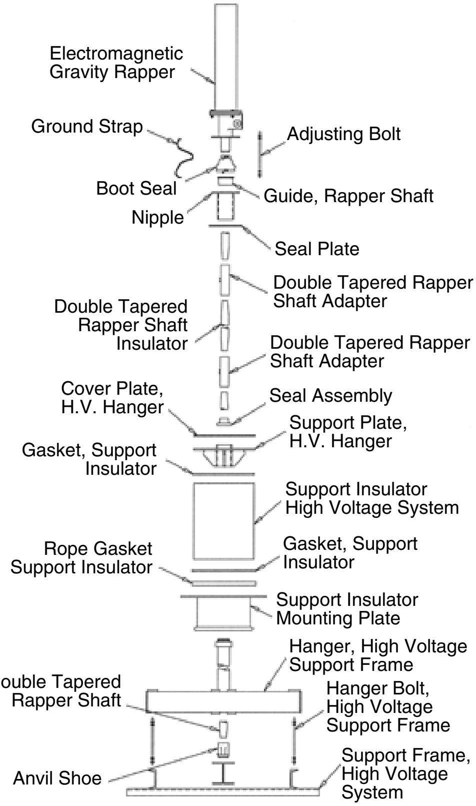

*Figure 5.4* Collecting system components (BHA Group, Inc.).

Some form of mechanical cleaning device serves both the high voltage and collecting system. These rappers can take the form of hammers mounted on a drive shaft, externally mounted pneumatic rappers, or electromagnetic impact devices. The basic intent is to impart a mechanical force to the collecting plates and discharge electrodes to cause dust to drop to the bottom of the precipitator for disposal.

During operation, AC is applied to the voltage control cabinet. Inside the cabinet is a voltage control and silicon control rectifier. The voltage control flow of current through the silicon control rectifier. Current from the silicon control rectifier enters the current limiting reactor, then the transformer rectifier. The current limiting reactor serves to reduce distortion in the AC wave form and limit current flow during sparking. The transformer rectifier takes the AC and converts it to DC. In addition, the primary voltage is stepped up to significantly higher secondary voltages. Typical secondary voltages are in the range of 45,000 to 115,000kV. Current exiting the transformer rectifier enters the electrical field where charging occurs.

Based on data measured within the electrical field, the voltage controls fire the silicon control rectifier to introduce current into the field. The amount

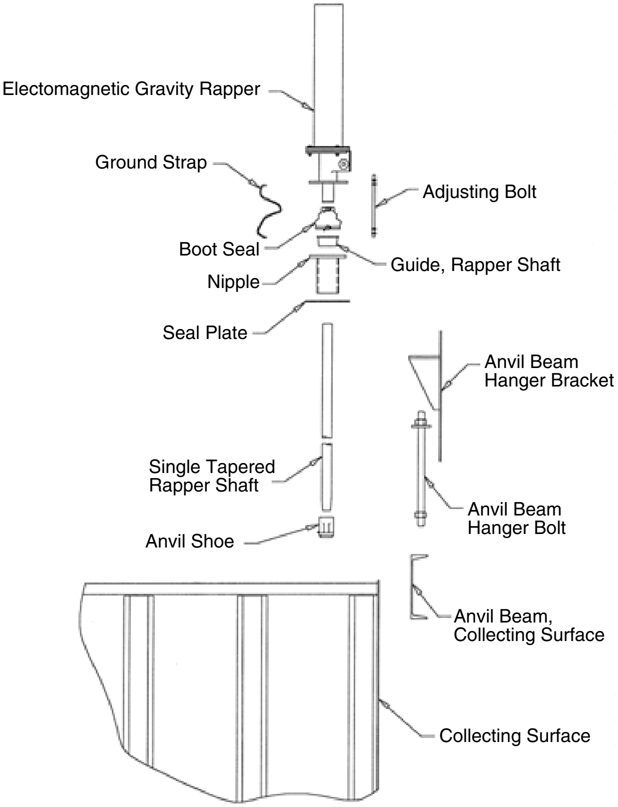

*Figure 5.5* High-voltage system components (BHA Group, Inc.).

of time that current is applied to the field is a function of the voltage at which sparking occurs within the field. When a spark is detected within the electrical field, the voltage quenches the spark by turning power off or reducing power levels to a preset level. Once the quenching period is satisfied, the voltage control ramps up power applied to the field in search of the next spark.

## *Primary mechanisms used*

As indicated, dust must be charged to be attracted to the collecting plates. This charging occurs between the collecting plates where the discharge electrodes are located. The presence of charge in the gas passage is a function of the secondary voltage applied to the electrical field.

## *Creation of charge*

Applying secondary voltage to the discharge electrodes creates the corona discharge. The minimum secondary voltage at which current flow is created is called the corona onset voltage. Typical corona onset voltages range from 12,000 to 25,000 volts. In general, the corona onset voltage is a function of the discharge electrode geometry, process gas characteristics, and dust characteristics. If the electrical field operates at a secondary voltage lower than the corona onset voltage, no charging will occur.

Two basic charging mechanisms occur within an electrostatic precipitator: field and diffusion charging. Particle size has a major impact on the type of charging that occurs. A discussion of each mechanism follows.

### *Field charging*

This charging mechanism generally dominants in particles 1.5 µm and larger. Dust particles intercept negative ions and electrons emanating from the discharge electrode. Charge physically collects on the surface of the dust, reaching a saturation point. This type of charging is very rapid, occurring in the first few feet of the precipitator.

### *Diffusion charging*

Particles less than 0.5 µm in diameter are charged using a diffusion mechanism. Diffusion charging is the result of co-mingling of particles and charge contained in the gas stream. Charging follows the pattern of Brownian movement is a gas stream; charge does not accumulate on the dust but acts upon it. This mechanism of charging is very slow compared to field charging.

As seen from the explanation, neither of the two charging mechanisms dominates when particle diameter is between 0.5 and 1.5 µm. In this size range, the combination of field and diffusion charging occur with neither mechanism dominating. As a result, the combined charging occurs at a rate much slower than either of the two mechanisms. When a precipitator experiences a dominant quantity of particles in this size range, performance is suppressed.

## *Design basics*

The relationship between operating parameters and collection efficiency is defined by the Deutsch Anderson equation. There are several modifications to the original formula, but the basic equation is:

$$\text{Efficiency} = e^{-(A/V)^{*}W}$$

where:

$W = (E_o\ E_P\ a/2\ \pi\ \eta)$
Efficiency = Fractional percentage collected from gas stream
$A$ = Total collecting plate area
$V$ = Volumetric flow rate in actual terms
$W$ = Migration velocity of dust towards collecting plates

$E_o$ = Charging field strength
$E_p$ = Collecting field strength
$a$ = Particle radius
$\eta$ = Gas viscosity
$\pi$ = Pi

The simple explanation of the Deutsch Anderson equation is that the precipitator collection efficiency is defined by the speed of the dust toward the collecting plates and the amount of collecting plate area relative to the total gas volume.

Increasing the migration velocity of the dust will increase collection efficiency of the electrostatic precipitator. Increasing the amount of collecting plate area available to treat the gas volume will also increase collection efficiency.

Likewise, reductions in migration velocity or plate area, or an increase in gas volume will cause collection efficiency to decrease.

As shown previously, removal efficiency of an electrostatic precipitator is largely determined by the ratio of the total collecting plate area to the gas volume treated. This ratio is called the specific collecting area (SCA). The higher the value for SCA, the greater the removal efficiency for the electrostatic precipitator.

Also critical to precipitator performance is treatment time. Higher treatment time implies a larger precipitator available for gas treatment. This parameter is a function of the total length of the mechanical fields in the direction of gas flow and the velocity of the gas through the precipitator. High efficiency electrostatic precipitators generally provide treatment times greater than 10 seconds.

Aspect ratio, treatment length divided by collecting plate height should be greater than 0.8. If the collecting plate becomes too tall relative to the available treatment length, problems associated with dust distribution and re-entrainment will increase.

## *Resistivity of dust*

There are two types of conduction characterized in dust: surface conduction and volume conduction.

Dust resistivity plays a major role in defining electrostatic precipitator collection efficiency. It is generally accepted that electrostatic precipitators operate most effectively when dust resistivity is in the range of $5 \times 10^9$ to $5 \times 10^{10}$ ohm-cm.

When dust resistivity drops below this range, the dust releases its charge readily to the collecting surface. As a result, the dust migrates to the collecting plates where it immediately loses its charge. The charge in conjunction with the cohesive nature of the dust keeps the dust on the collecting plates. If the charge is lost, the dust is likely to be re-entrained back into the gas stream. Conversely, high resistivity dust retains charge for extended periods. When

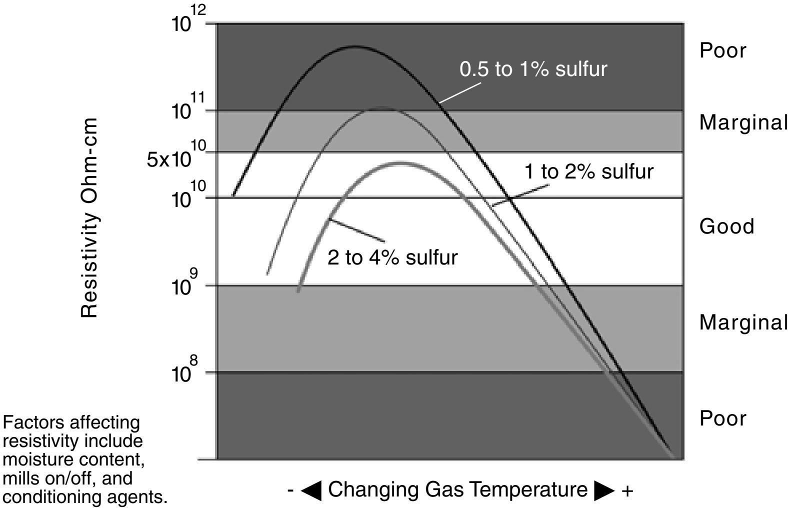

*Figure 5.6* Average ash resistivity vs. gas temperature (BHA Group, Inc.).

the high resistivity dust deposits on the collecting plates, charge does not dissipate. In fact, charge continues to accumulate due to the constant corona emanating from the discharge electrodes. As a result, high resistivity dust is very difficult to remove from the collecting plates. It is not uncommon for high resistivity dust applications to require periodic manual cleaning to restore precipitator performance.

Figure 5.6 indicates relative dust resistivity for varying sulfur content of coal. Similar relationships exist between resistivity and process gas moisture content.

Flow of current through the dust layer occurs in one of two methods: surface conduction or volume conduction. The temperature at which the process operates defines the dominant method of conduction.

Volume conduction is the process of current flow *through* the particle. This conduction method occurs on the hot side of the resistivity curve. The hot side starts at the point on the resistivity curve where increasing temperature produces reduced resistivity.

Volume conduction is determined by the resistivity of the constituents at the process operating temperature. Changing the moisture content or adding conditioning agents to the process gas stream will have minimal impact on hot side dust resistivity.

Surface conduction occurs on the cold side of the resistivity curve. The cold side is defined from the peak on the resistivity curve towards the slope of decreasing resistivity with decreasing process temperature.

Surface conduction occurs across the surface of the dust particle. Current flow is largely determined by the quantity and type of gasses condensed on the surface of the particle. When operating on the cold side of the resistivity curve, addition of conditioning agents or moisture will generally improve operation.

## *Operating suggestions*

Several activities are necessary to ensure effective operation of an electrostatic precipitator.

### *Air load/gas load testing*

Air load/gas load testing is the process of operating the electrical fields under known conditions. The air load test occurs before start up or immediately after shut down of the process. Before testing, each electrical field is isolated and confirmed to be ready for energization of the transformer rectifiers. Fans are set at a very low flow rate, adequate to provide some ventilation of the electrostatic precipitator.

The voltage control is set in a manual condition. The secondary voltage levels applied to a single electrical field are increased incrementally from zero. At each increment, the measured secondary current is recorded. The secondary voltage at which secondary current is first observed is called the *corona onset voltage*. The secondary voltage is increased to the point at which the nameplate rating of the transformer rectifier is achieved or the field sparks. This process is repeated for each electrical field until all are complete.

As a practical matter, all air load tests should be performed from the outlet electrical field working toward the first field of the precipitator. Sparking generates ozone, which lowers the sparking threshold of a field.

The data derived from the air load test can be plotted creating a volts vs. amps (V-I) chart. The airload V-I chart can then be compared to that achieved during operation. Most modern voltage controls contain an automatic air load function that will ramp the voltage and create the plot.

Tests similar to the air load can be accomplished during operation of the process. These tests are called *gas load tests*. The curve plotted from these process conditions can be used to diagnose electrostatic precipitator operating problems.

### *Alignment*

As indicated, the speed of the dust toward the collecting plates is a function of the applied field strength. The secondary voltage levels achieved largely determine field strength.

It is desirable to have the discharge electrodes centered within the gas passage and between collecting plate stiffeners. As the electrical clearance decreases due to changes in alignment, the voltage at which sparking will occur decreases. Bowed collecting plates, misaligned fields, and foreign objects in the gas passage will increase spark rates and decrease secondary voltage levels.

### *Thermal expansion*

When the casing and internal components of a precipitator achieve operating temperature, thermal expansion may change the electrical alignment. In this condition, electrical conditions may be acceptable at ambient temperatures, but not at operating temperatures.

It is essential to ensure that the components can accommodate growth associated with thermal expansion and still maintain acceptable electrical clearances.

### *Air in-leakage*

As shown in the Deutsch Anderson equation, collection efficiency is a function of specific collecting area. If ambient air is leaking into a negative pressure gas stream, the precipitator is forced to treat a larger total gas volume. There are other reasons that air in-leakage reduces precipitator performance.

Ambient air generally contains a lower water content compared to flue gas. As shown in the resistivity section, increasing moisture content improves dust resistivity. When ambient air leaks into the gas stream, the average moisture content is reduced and resistivity generally increases. This applies to those units operating on the surface conduction side of the dust resistivity curve.

### *Rapping*

The ongoing satisfactory performance of an electrostatic precipitator is a function of maintaining the collecting surfaces and discharge electrodes free from excessive dust layer.

Creation of an acceptable rapping program is an iterative process. There is no formula that establishes the correct program. As changes are implemented to the rapper program, they must be evaluated in terms of their impact on emissions and electrical conditions. It can take several hours for some rapper changes to begin showing impact on the precipitator performance.

It is desirable to have a slight buildup of dust on collecting plates. Dust depositing on the surface of the collecting plates will agglomerate with the dust already residing there. This reduces the potential for dust re-entrainment during normal rapping. Generally, this dust layer should be less than $^3/_{16}$ inches thick and uniform across the surface of the panels.

If the dust layer is too thick, the potential exists for excessive amounts of dust to be dislodged during rapping. In addition, if the dust resistivity is high, the dust layer will create a voltage proportional to the resistivity of the dust. This will reduce performance of the unit.

The high voltage system should not have a normal dust layer. It is desirable to keep the electrodes clean during operation. Dust depositing on the electrodes can create a voltage drop that will impair performance.

### *Insulator cleaning*

The high voltage system is isolated from ground by support insulators. These insulators are exposed to process gas, which contains dust and moisture.

Dust and moisture accumulating on the surface of insulators will cause them to track and carry current. This can result in loss of current necessary to charge dust, and in the extreme case failure of the insulators.

In an electrostatic precipitator, there are insulators supporting the high voltage system, insulators stabilizing the lower high voltage frames, and isolating the high voltage rapping system. External to the process are insulators supporting the high voltage bus and providing high voltage termination from the transformer rectifier. All of the insulators must be kept clean free from carbon tracking.

### *Purge heater and ring heater systems*

The majority of electrostatic precipitator operate under negative process pressure. As a result, air drawn into the penthouse or insulator compartment can cause condensation of moisture contained in the gas stream. The condensation results in accelerated corrosion and excessive sparking in the electrical field.

It is advisable to provide a blower filter heater arrangement that forces air into the insulator enclosure. This clean heated dry air will mix with the process gas without causing condensation.

If a purge heater system cannot be used, then ring heaters installed around each support insulator will provide some protection.

It is essential that the purge heater or ring heater system be energized at least 4 hours before introducing process gas into the electrostatic precipitator.

### *Process temperature*

As indicated in the resistivity section, elevated gas temperature on a cold side precipitator will result in degraded performance. As a result, it is critical to minimize process temperatures entering the cold side unit.

This can be accomplished by monitoring soot blowing programs and maintaining the heat transfer efficiency of the air heater.

In the case of a precipitator operating on the hot side of the resistivity curve, it is beneficial to maximize gas temperature. When operating this type of unit at reduced load, high resistivity dust may build up on the collecting plate and electrodes. This will result in excess emission during load ramp up. To avoid this problem, an aggressive rapping program should be initiated at reduced loads.

### *Fuel changes*

As coal composition changes, the resistivity of dust created can increase. Increased dust resistivity may result in reduced electrostatic precipitator performance. To alleviate this problem, it is common to increase the moisture content of the flue gas when operating on the cold side of the resistivity curve.

Moisture content of the process gas can be increased by operating the steam soot blowers, or by installing an evaporative gas conditioning system ahead of the precipitator. If alternate coals are on site that have more favorable resistivity, they can be blended with the difficult coal to produce better precipitator operation. In severe cases, it may be necessary to install a flue gas conditioning system that injects $SO_3$ into the gas stream.

## chapter 6

# Evaporative coolers*

## Device type

Evaporative gas coolers use the controlled application of a liquid (usually water) to a hot gas stream to reduce that gas stream's temperature through the evaporation of that liquid. The liquid is often applied in the form of an air atomized mist or fog.

## Typical applications and uses

Evaporative coolers are designed to reduce a hot gas stream's temperature to a level suitable for further treatment. They are also used to "condition" the particulate before capture in another device.

When a gas stream requires treatment by a device that is sensitive to gas temperatures as well as gas humidity (such as a fabric filter collector), an evaporative gas cooler is often used to reduce the gas stream temperature to a tolerable level above the saturation temperature. Through the careful application of the liquid, the outlet temperature can be reduced yet the bulk stream quality can be maintained safely above the water saturation temperature and/or acid dewpoint.

The evaporative gas cooler is sometimes also used ahead of devices such as electrostatic precipitators or spray dryers to temper or condition the gas stream before particulate separation or gas absorption onto a sorbent. For boiler applications, the addition of moisture often favorably reduces the resistivity of the fly ash.

Evaporative coolers are often used as the first stage of a gas cleaning system on hot gas applications such as thermal oxidizers, incinerators, furnaces, calciners, and kilns. Figure 6.1 shows an evaporative cooler (to the right) ahead of a pulse type baghouse equipped with dry lime injection on a medical waste incinerator. The evaporative cooler reduces the flue gas

---

* This chapter is contributed by Wayne T. Hartshorn, Hart Environmental, Inc., Lehighton, Pennsylvania.

*Figure 6.1* Evaporative cooler on pulse type baghouse (Bundy Environmental Technology).

temperature to less than 500°F to protect the filter media in the collector and to reduce the treated gas volume.

## *Primary mechanisms used*

Evaporative coolers use the heat of vaporization of a liquid to extract heat from the gas stream and thereby reduce the mixture temperature.

The evaporation rate is dictated by the temperature and hdifferential between the desired outlet gas conditions and the given inlet gas quality. The droplet size produced by the evaporative cooling nozzles or spray system dictates the evaporation time and therefore the physical size of the evaporative cooler.

## *Design basics*

Over the years much progress has been made in the further development and improvements of air pollution control (APC) devices, such as electrostatic precipitators (wet and dry), fabric filters (baghouses), scrubbers (wet and dry), as well as other types of collection equipment. However, far less attention has been given to the cooling and conditioning of hot process gases before being treated in APC devices. Every APC device installed on a high temperature application is affected in some way by the cooling technique used. Because of this affect, the area of cooling and conditioning becomes significant and indeed important when designing an overall gas handling or pollution control system.

Evaporative cooling can be applied to hot process gases in many industries and applications. Some of those industries are ferrous and nonferrous metals, rock products, industrial and utility power, and incineration. When evaporative cooling systems are properly engineered, they can provide the most cost-effective method of dealing with increased heat loads from these sources.

## *Types of gas cooling*

The three most commonly used techniques for cooling hot process gases are dilution cooling, convection/radiant cooling, and evaporative cooling. Figure 6.2 shows the effect of evaporative and dilution cooling on resulting gas volume when cooling to 400°F. When selecting an APC device to be installed downstream of the gas cooling system, it is important to note the lower gas volume that results using evaporative cooling vs. dilution cooling.

*Dilution cooling* is the use of ambient air to dilute the total heat content of a hot gas stream so that its resulting temperature is lower, that is, fewer British thermal units (BTUs) per pound of gas.

*Convection/radiant cooling* implies the use of heat exchanger surface to exchange BTUs from the hot gas stream to a suitable receiver fluid, which

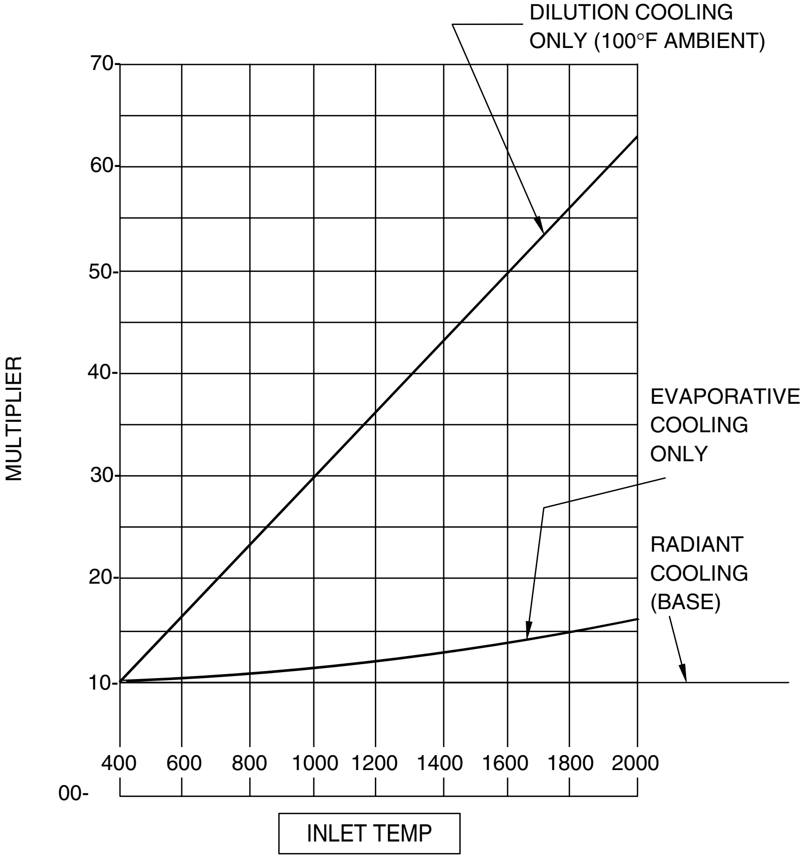

***Figure 6.2*** Effect of evaporative and dilution cooling (Hart Environmental, Inc.).

is normally air, or water in the case of waste heat boilers. The receiving fluid may either be forced across the heat exchanger surfaces by means of fans or pumps, or natural convection currents can be used as in the case of hairpin type radiant coolers.

*Evaporative gas cooling* is the use of the heat of vaporization of water to absorb BTUs from the hot gas stream and thus reduces its temperature. Evaporative cooling systems can either be wet or dry, depending on the design and the particular process requirements.

## *Gas conditioning*

When we discuss evaporative gas cooling, it is commonly understood that the concept is used to cool hot gases. However, evaporative cooling technology does more than lower gas temperatures.

The term "gas conditioning" can refer to many processes but the end result is to affect the nature of the gas in some way beneficial to the APC device. The purpose may be to change the gas or dust electrical resistivity, dust surface conditions, corrosion characteristics, odor, or many other functions. Gas conditioning is accomplished by the addition of water, acid, ammonia, or some other type of chemical. Figure 6.3 shows the effect of moisture added on fly-ash resistivity. Reducing the resistivity of fly ash can improve the performance of electrostatic precipitators.

The basic reason for cooling hot gases is to allow the gases to be collected by conventional APC devices, which have temperature limitations. There are some other reasons, however, which are somewhat less apparent and should be considered in the design of any air pollution

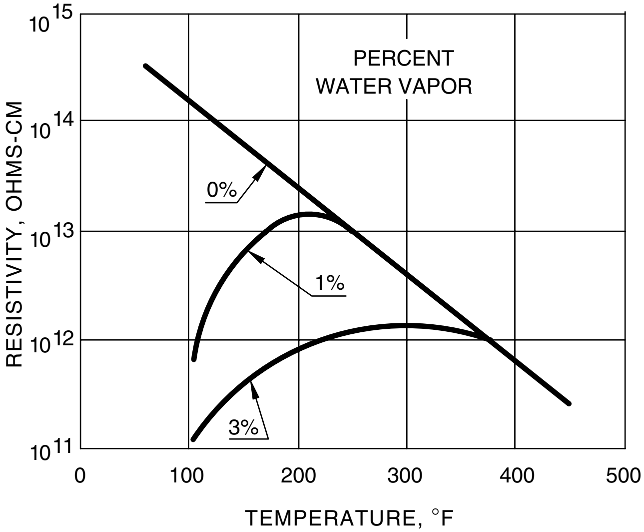

***Figure 6.3*** Effect of moisture on fly-ash resistivity (Hart Environmental, Inc.).

control system. They are: to improve collection efficiency of the APC device, to reduce the size of the APC device and associated equipment, to reduce maintenance and thus downtime in the collection and related equipment, to increase production, and to improve reliability and service life of the APC device and components.

The terms "evaporative cooling" and "evaporative conditioning" both imply the injection of water into a hot gas stream. The purpose may be to reduce the gas volume by reducing gas temperature, to alter gas or dust properties by changing humidity, or to reduce temperature to allow less expensive filter materials and/or materials of construction. Whatever the particular reason, the problems remain the same. Reviewing technologies around the world revealed two general groupings of problems with some types of technologies. They were; problems of original design generally related to the sizing of the equipment, atomizing nozzle type and placement, and ability, or inability, to turndown; and mechanical and maintenance problems associated with the type of spray nozzles selected and the gas velocities in the systems.

Due to the history and problems associated with evaporative gas cooling and conditioning, efforts were put forth to improve the design and reliability of water spray systems on all industrial applications. Those efforts included a better understanding of why the systems were being used. In some cases, cooling of the hot gases was all that was required and was not desirable to affect the properties of the suspended dust particles or gases. In other cases, field experience has shown that the real object of water sprays was to affect the electrical resistivity of the dust particles, or gases, and cooling was simply a secondary function. In many industrial applications the temperature and electrical resistivity level is very critical when using a hot/dry electrostatic precipitator as the APC device.

When considering an evaporative gas cooling and conditioning system, one must bear in mind process requirements. Cooling equipment and components can be selected on the following basis: collection or APC device requirements, process outlet temperature, temperature cycles from the process, and the nature of the gas stream.

The first step is to select or determine the type of collection equipment or APC device that will be used for control of emissions. The properties of the emissions, the particulate loading, and the nature of the emissions will affect the type of APC device used. Once the collection device has been selected or determined, the operating temperature must be determined. In the case of a dry electrostatic precipitator, electrical resistivity will be a factor. In the case of a baghouse (fabric filter), the type of filter material will be a critical factor; and/or the maximum temperature of the inlet gases will be a function of materials used and capabilities in the case of a scrubber or wet electrostatic precipitator.

Once the collection equipment and the inlet operating temperature are known, the designer must consider the process outlet temperature to determine the amount of cooling required.

Another factor, which is very important in the selection, design, and control of the evaporative gas cooling and conditioning system, is the gas temperature profile. Very constant profiles are easier to handle but rapidly cycling temperatures are more difficult to handle and control. Knowing the process temperature profile will allow the designer to select the right control for the evaporative cooling and conditioning system. The control system, or method of controlling rapidly changing temperatures can provide a very constant outlet temperature. It is extremely important to maintain a very constant outlet temperature from a cooling system to protect and maximize the efficiency of the APC device. A properly designed evaporative gas cooling and conditioning system is capable of accomplishing this requirement.

A rather serious consideration regarding the cooling system design is the effect of the cooling process on the chemical composition of the gas stream. There may be vaporous constituents, which condense at certain temperatures, through which cooling must be affected and if there is a plastic phase involved with that condensation process, then extreme fouling or plugging of ductwork or other equipment may result unless cooling is effected rapidly. A properly designed and applied evaporative gas cooling and conditioning system can accomplish this rapid cooling or quenching.

### *Basic sizing*

There are three fundamental elements necessary for designing and selecting an evaporative hot gas cooling and conditioning system. They are:

1. A sound understanding of the dynamics of droplet evaporation under varying conditions.
2. Spray nozzles capable of producing extremely fine water or liquid droplets over a wide flow modulation range and with the ability of creating finer droplets with turndown.
3. A control system and overall systems' view, which takes full advantage of the design data and modulation capability of the spray nozzles while recognizing and designing for the environment into which it is to be applied.

Evaporative cooling involves the use of fine water sprays to cool a hot gas stream. The cooling section is located between the heat source (furnace or process) and the APC device (dust collector equipment) and, in its simplest form, consists of a straight section of ductwork, or a chamber (usually cylindrical) with spray nozzles inserted through the walls. At times the inlet gas temperatures exceed the temperature limits of ductwork or chamber steel. When this occurs, refractory lined ductwork or chambers are used. When chambers are used, they are usually cylindrical and mounted vertically with the gas inlet transition at the top or bottom depending on the overall system design. In all cases, spray nozzles are positioned for maximum gas/water contact.

When using a cooling chamber, one must provide adequate residence time for droplet evaporation. The diameter of the cooling chamber is sized to limit gas velocity from 700 to 1,200 feet per minute (fpm) based on the average gas volume rate at the inlet and outlet.

Water usage calculations are made by performing an energy balance on the system. Using readily available enthalpy tables or specific heat data, the required flow rates of water are calculated for the expected hot gas flow rates.

A fairly close estimate of the water usage requirements to cool hot gases can be made using results shown in Figure 6.4.

The calculated data plotted in Figure 6.4 were obtained for the cooling of hot dry air by water evaporation assuming constant specific heats for air and water vapor. Given the normal degree of fluctuations and uncertainty in the measured hot gas flow rates in industrial practice, the graph shown in Figure 6.4 yields quick information, good enough for most preliminary equipment sizing and design purposes.

More accurate predictions of water usage must be made using enthalpies for each gaseous constituent present in the hot process gas stream.

One of the major shortcomings of traditional evaporative gas cooling and conditioning systems of old has been the lack of good quantitative data, which would allow accurate determinations of residence time. Accurate calculations for residence time determines the size requirements of either

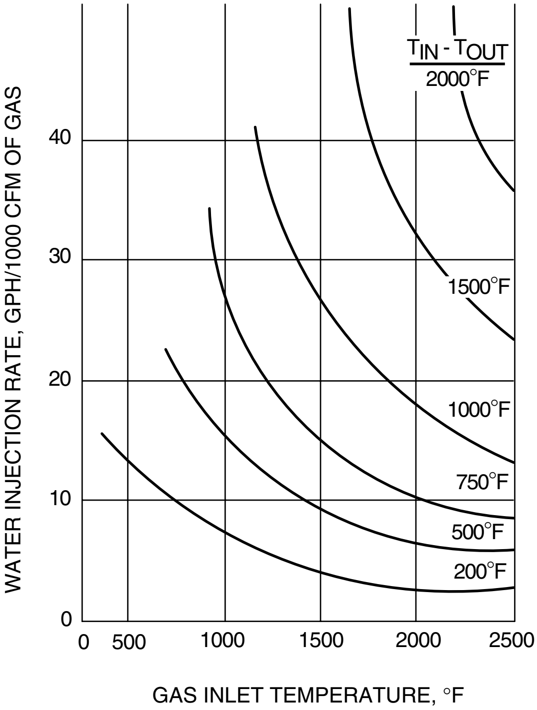

*Figure 6.4* Water injection rates (Hart Environmental, Inc.).

the cross-sectional area of ductwork or a cooling chamber, and the length necessary to accomplish the total evaporation.

Many suppliers of spray towers base their designs either on data that were available for spray drying from Marshall, but were applicable to only a small range of temperatures, or on other parameters that were based on other limited field experience, or a good understanding of nozzle geometry, or both.

In 1972, an exhaustive computer analysis of evaporation rates was performed. The study analyzed evaporation rates of various droplet distributions with inlet temperatures ranging from 650°C to 1370°C under various conditions of inlet humidity and velocity.

The most significant findings of the study were:

1. The largest droplet in a given spray distribution required the longest time to evaporate. As simple and intuitive as that sounds, the importance was not previously recognized.
2. An excess of fine droplets in the presence of a few large ones increases evaporation time ($t_e$) by lowering the temperature (driving force) surrounding the larger droplets.
3. A determination of residence time cannot be made by a consideration of the largest droplet or the mean droplet diameter alone, but must consider the entire droplet distribution. Effective droplet diameter ($D_{eff}$) for a given distribution is defined as the equivalent droplet of a perfectly homogeneous spray that would evaporate in the same time. The actual value of $D_{eff}$ must be determined from the gas cooling supplier or from experienced gas cooling spray nozzle experience. The formula for determining effective droplet size is shown as follows:

$$D_{eff^2} = t_e \cdot f(T_s)^{10C_1T_gC_2T_i - C_3}$$

where:

$t_e$ = evaporation time

$D_{eff}$ = effective droplet diameter

$T_i$ = initial temperature

$T_s$ = saturation temperature

$C_1, C_2, C_3$ = constants

$T_g$ = average temperature

The moisture content of the gases to be cooled cannot be neglected in the determination of evaporation time when the outlet temperature approaches $T_s$ as in those cases $f(T_s)$ approaches 0 and $t_e$ approaches infinity.

## *The all important atomization*

Effective and reliable evaporative gas cooling and conditioning *must* begin with properly selected and applied atomization. All atomizing nozzles are not created equal especially when using them for evaporative gas cooling and conditioning.

An atomizing nozzle used in this application (gas cooling and conditioning) should have the following characteristics:

1. Efficiently produce water droplets with small maximum droplet diameters and relatively uniform size distributions (minimum $D_{eff}$) at maximum flow rates.
2. It should have a wide flow modulation characteristic while producing finer droplets with turndown. This is important because evaporation time increases as inlet temperature decreases.
3. It should be designed to minimize maintenance; that is, the nozzle materials of construction and design must be suited to operate and live in aggressive hot gas environments, utilize relatively large liquid ports to minimize internal pluggage, and be relatively self-cleaning to avoid external build-ups of gas-laden dust, which would interfere with its atomizing characteristics. Figure 6.5 shows a photo of a heavy-duty gas cooling nozzle.

There are two types of atomizing nozzles that can satisfy the requirements for hot gas cooling and conditioning applications. These nozzles are first and foremost robust in construction and secondly capable of producing the kind of droplet size distributions necessary for effective atomization. These nozzle designs are referred to as dual fluid atomizers. This is where a liquid, usually water, and a compressible gas, usually compressed air, is pumped into the nozzle in combination to supply the liquid and energy for the required atomization. The two nozzles, both dual fluid types, which will

***Figure 6.5*** Heavy duty atomizing nozzle designed for evaporative gas cooling (Hart Environmental, Inc.).

***Figure 6.6*** External mix nozzle (left); internal mix nozzle (center, right) (Hart Environmental, Inc.).

be discussed here, differ in geometry. One is referred to as an external mix device while the other nozzle is an internal mix device. See Figure 6.6 for a photograph of the two types of gas cooling atomizing nozzles.

External mixing is where the liquid, usually water, is introduced externally into the compressed air. Mixing the liquid externally with the accelerated air stream shatters the liquid into very fine droplets. In the internal mix device the liquid and compressed air is mixed internally in a multi-port fashion before exiting the nozzle outlet orifice.

The external nozzle generally uses more compressed air consumption but can produce turndown capabilities of as much as 20 to 1. The internal mix type nozzle will be more of an energy saver but the turndown is lower at 10 to 1. Each nozzle design can be produced in many sizes and they both have their strengths and weaknesses. Depending on the process and system requirements, one nozzle type may have some advantages over the other. However, during the selection process, a systems analysis must be completed to decide which atomizing technology is best for a given application. Because both the external and internal mix nozzles do not rely on hydraulic energy to atomize, the liquid ports are relatively large and wear does not affect performance within broad limits.

A significant advantage of the nozzles presented here is that controlling the ratio of energy to flow with turndown can control the size of the liquid droplets. This is an important aspect of the nozzle selection because it allows the cooling duct or chamber to be sized as a function of maximum temperature conditions without risk of low-end problems. Although there are other nozzles that produce a similar degree of atomization; that is, extremely high-pressure hydraulic nozzles, these nozzles pose mechanical and operational problems, which preclude their general use. They use extremely small liquid ports which plug and wear, are limited in their maximum flow capability, do not offer adequate turndown ratios, and droplets increase in size as the nozzles are turned down. Furthermore, these nozzles produce higher momentum directional sprays, which impinge on duct or chamber walls creating corrosion and dust buildup problems.

Although the data and spray nozzles provide the major technical components to this gas cooling and conditioning technology, they cannot stand alone. Each component of the overall system must be designed to survive the plant environment, to function through the full range of operating conditions, and to minimize maintenance. Some parameters, which should be considered in this technology are:

1. Gas inlet design: Gas flow through the inlet section of a cooling chamber or into a duct section where the spray nozzles are located must be straight to avoid washing of the walls. The use of internal distribution devices should be avoided.
2. Gas velocity: Gas flow direction through the duct or chamber is maintained by the use of relatively high velocity, minimizing the potential of wall buildups.
3. Controls: Processes modulate on a continuous curve, not as a step function. Controls must modulate on the same curve and must be as rapid as the process to insure that exactly the correct quantity of water is injected at any given time. Depending on several variables such as inlet and outlet temperatures, fluctuations in process conditions, flexibility and adjustability requirements the scope of the control can vary. Control schemes will vary from single loop feedback control to feed forward/cascading type control. Some applications may be able to use pressures of both fluids to control flows while other difficult gas streams require more powerful controls of actual flow measurements and specific algorithms for more precise control. The best control philosophy for a specific application must be determined during the review of the specifications and process conditions. Figure 6.7 shows a typical flow control scheme.
4. Redundancy: In certain critical areas there is a need to provide redundant equipment to minimize downtime, which affects production. Utilities and measuring devices are generally the most vulnerable components and require the greatest attention.
5. System layout: A good system review and layout will serve to minimize installation costs and maintenance by packaging related materials close to each other, minimizing ductwork and structural steel, and facilitating access.

The system considerations listed previously are universal and do not apply solely to evaporative gas cooling and conditioning systems. Evaporative gas cooling and conditioning systems, whether duct cooling or cooling chambers, have a unique reputation for misapplication of the principle. They

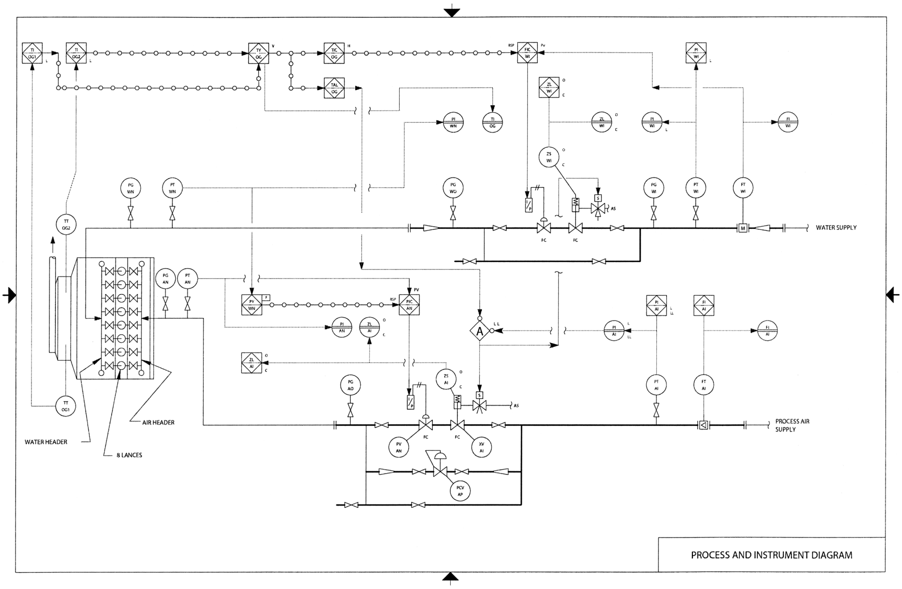

*Figure 6.7* A typical process and instrumentation diagram for flow control (Hart Environmental, Inc.).

typically do not get the attention that they deserve compared to the selection process of APC devices. Evaporative gas cooling and conditioning systems are an important and integral part of the gas handling system. They should be coordinated and thoroughly thought out as a key element to the overall performance of any APC system scheme.

What does one of these look like? Figure 6.8 shows an evaporative cooling tower in use ahead of a baghouse at an aluminum plant.

The evaporative cooler is located at the center of the frame and the baghouse is to the left of center.

## *A case history example*

One of the earliest applications of improved dual fluid atomizing nozzles to evaporative hot gas cooling occurred at a mining company that processes copper ore into a refined product.

The roasting operation resulted in an 1100°F gas, which had as its major contaminating constituent sulfur dioxide and combustible dust particles, which would ignite if the cooling sprays were turned off. Because the dry electrostatic precipitator that was installed at that time could not tolerate temperatures above 800°F, an evaporative gas cooling tower was used to reduce the gas temperature to the desired level and to provide additional moisture for subsequent conversion of sulfur dioxide to sulfuric acid.

The original installation used ten high pressure, single fluid, 350-psig spray nozzles in a vertical cooling chamber 31 feet high by 11 feet in diameter.

*Figure 6.8* Evaporative cooler on aluminum plant (Hart Environmental, Inc.).

The liquid droplets produced covered a wide size range and their velocities were excessive due to the high atomizing liquid pressure. Approximately 15,000 cubic feet per minute of hot gas with a velocity of 2.6 feet per second did not provide enough residence time for complete droplet evaporation due to the high velocities of the larger droplets produced by the high pressure spray nozzles. The large droplets remained in the cooling chamber due to incomplete evaporation or impaction and run-off down the chamber internal walls together with entrained dust build up fouling sludge deposits in the collector's hoppers. Frequent shutdowns of the system were required to permit the cleaning out of the sludge buildups.

The change over to correct and/or improve the evaporative cooling operation was to three dual fluid external mix nozzles. The dual fluid atomizers were adequate to replace ten high-pressure nozzles that were originally used. The retrofitted dual fluid nozzles operated at 60-psig compressed air and 58-psig water pressure. The resulting spray of approximately 3.5 gallons per minute per nozzle produced droplets that minimized the unevaporated water fallout and sludge buildup. The unscheduled shutdowns were eliminated due to problems associated with the original high-pressure spray nozzles.

## Cost considerations

Experience over the years has indicated that the installed cost of a complete evaporative gas cooling system generally runs about 10% of the complete air pollution control or gas handling system price. Because of this low cost the evaporative gas cooling system has received much less attention than the APC devices. However, the design, selection, and performance of the evaporative gas cooling system can have a major impact on the success of the overall gas handling or gas cleaning system. This performance can complement the emission as well as the maintenance of the plant's operation.

A complete evaporative gas cooling system will consist of a cooling chamber or duct, the spray nozzles and supporting lance assemblies, air and liquid valve rack trains, compressed air, pumping station, and the necessary piping and wiring to connect the components.

The major consideration and operating cost for a dual fluid nozzle system will be in the compressed air usage. Compressed air is the second fluid necessary to produce the most efficient atomization and droplet sizes for effective evaporative gas cooling. Depending on the type of nozzle (internal or external mix) applied, the compressed air requirement can be from 4 to 10 standard cubic feet per minute (scfm) per GPM of cooling liquid required. For estimating purposes it will take about one horsepower of compressed air to produce about 5 scfm.

Evaporative coolers can be quite large because adequate time must be provided to allow the atomized sprays to dry to completion. Figure 6.9 shows a large evaporative cooler on a dry process cement kiln in use ahead of a dry electrostatic precipitator.

***Figure 6.9*** Evaporative cooler on dry process cement kiln (Hart Environmental, Inc.).

### *Operating suggestions*

Many times, the fate of the downstream equipment is in the hands of the evaporative cooling system. On the high temperature side, the bags in a baghouse may not be able to tolerate temperatures much more than the desired operating temperature. On the low temperature side, excessive cooling can bring the gas stream temperature and humidity to at or near the acid dewpoint. Needless to say, the evaporative cooler should be properly designed and maintained.

Make certain that the worst condition of the liquid you are using is made known to the evaporative cooling system vendor. Under hard water conditions, it is often wise to use softened water to reduce nozzle scaling and/or plugging. Filtered water is an absolute minimum requirement.

Allow in your design space to pull and spray lances or headers. Stage the spray systems if possible and allow for back up spray assemblies to be used. The control system should also be anticipatory, that is, monitor trends in gas temperature versus the evaporative system response. If the controller senses that it cannot keep up with the evaporative demand, suitable alarms or even shutdown should be activated.

Any feed pumps and compressors should be redundant if possible if the application is extremely heat sensitive (say the source is above 1200°F).

Likewise, the cooler outlet temperature thermistor or thermocouple should be redundant to make certain that this important signal is clean and constant.

Spare nozzles (as a minimum) and spare lance assemblies should be purchased and kept in stock so that the evaporative cooler can be maintained at peak operating performance.

Do not skimp on evaporative cooler vessel size. An excessively small vessel can allow mist carryover to the downstream equipment and cause corrosive damage, or in the case of a baghouse, bag blinding.

A properly designed evaporative cooler will temper a hot gas stream reliably, day after day, and help make any downstream equipment perform at its best.

# chapter 7

# Fabric filter collectors*

## Device type

Fabric filter collectors, or baghouses, separate particulate from gas stream by causing the particulate to pass through a filtering media, a layer of previously collected (or purposely deposited) particulate, or both. The gas-borne particulate is intercepted by the fibers of the filtering media, by the particulate already present on the media surface, or both. To prevent excessive pressure drop as the particulate accumulates, these devices use various mechanisms to disengage the particulate from the media.

## Typical applications and uses

There are three basic dust collector applications. "Nuisance" venting of conveyors, transfer points, packing stations and so on — this dust is often sent to waste. Next is "product collection" venting of classifiers, crushers, storage bins, air (pneumatic) conveying systems, mills, and flash dryers. This dust is often recovered because it has value. Last is "process gas filtration" venting of spray dryers, kilns, power boilers, reactors and so on. The collected solids may or may not be returned to the process. This dust may or not be worth recovering but must be controlled for environmental or workplace health reasons.

Fabric filter collectors are also currently used for gas absorption applications wherein the fabric filter collector is preceded by a spray dryer, dry Venturi, ductwork injection system, or the bags are precoated with an adsorbent or absorbent. Sodium bicarbonate precoat, for example, has been used to remove gaseous $SO_2$ from power boiler exhaust gases. A precoat of lime or a spray dried slurry of lime has also been used on many applications to simultaneously remove particulate and acidic gases. When toxic dioxins are present, some applications use activated carbon as part of the precoat.

Figure 7.1 shows a baghouse preceded by an evaporative cooler on a cupola operation. The hot gases enter from the bypass stack at the left and

---

* This chapter is contributed by Deny Claffey and Michael Claffey, Allied Mechanical, Las Vegas, Nevada.

*Figure 7.1* Baghouse with preconditioner (Bundy Environmental, Inc.).

proceed to the downward firing cooler/conditioner. An absorbent is injected in the vertical cylindrical tower at the center of the picture. Toward the right is the baghouse in which the absorbent and process particulate is collected. The stack is on the right.

In contrast in size and complexity, the small dust collector in Figure 7.2 collects dust from problem sources and deposits it directly into a drum.

Fabric filter collectors are generally *not* used where the particulate (dust) is combustible or where the product is to be sent back to the process and wetted. For the latter, it is often easier to simply use a wet scrubber for collection. In that manner, the product is prepared to be returned to the process. Fabric filter collectors are also avoided if glowing embers or other such damaging carryover exists that could damage the collecting media or cause a fire. In some cases, a suitably designed cyclone collector is used to protect the baghouse.

## *Operating principles*

Fabric filter collectors function by filtering or screening particulate from the gas stream that carries that particulate. To understand this better, first, a little bit of history.

Dry dust collectors have evolved through the years from very primitive basic designs to a relatively sophisticated series of machines. Initially, when air pollution control regulations did not exist, collectors were only required to catch some of the particulate coming off a process. For example, at one time

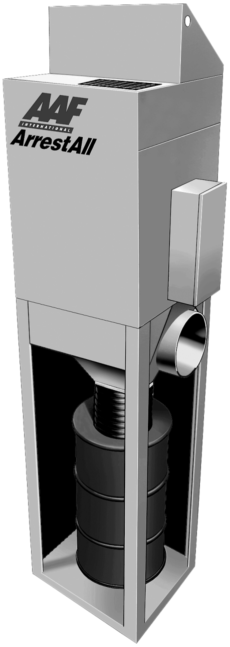

*Figure 7.2* Nuisance dust collector with drum (American Air Filter).

a drop out box (settling chamber) could in some cases meet the collection criteria. The dry cyclone was, for a time, the ultimate in collection machinery.

These first dust collectors were simple mechanical machines. The drop out box (settling chamber) took a moving air stream including dusty particulate, and slowed it down to a point where the particulate dropped out due to its own gravity. The slower the air velocity, the heavier the particulate, and the better the separation. The biggest box allowing for the lowest air velocity and longest retention time was the best. In the real world, the drop out box was then and still is well suited to separate lighter floating products from heavy particulate. The lesson here is that gravity and carrying air velocity are still very important issues to consider in any dust collector but they have their limitations.

As mentioned in the dry cyclone chapter, the dry cyclone uses gravity and centrifugal force to spin the dust out of the air. Cyclone designs can be very sophisticated and they can be extremely efficient solids separation devices and classifiers. Cyclones at one time could separate enough dust from processes to be considered an air pollution control device. Centrifugal force alone was not enough. As time went by and air quality standards became more stringent, a fabric filter collector became the primary device to use to meet air quality standards. In applications with high particulate loadings or when processing stringy floating type products, a cyclone makes an excellent scalper or pre-cleaner for a fabric filter. A cylindrical fabric filter with large annular space between filters and shell set up with a high tangential cyclone type inlet is an excellent heavy duty collector/receiver.

Fabric filters are devices that use some type of permeable fabric to screen the particulate from moving air. This fabric or material is often called filtering media or simply, media. The first fabric filters were panel type designs somewhat like a home hot air furnace filter but their time was short lived because they could not self-clean. As they plugged or blinded they were changed manually, discarded, and replaced with new filters. The next step was to develop a machine with fabric filters that could clean itself. The first devices used tubular fabric socks arranged in rows in a matrix enclosed in a housing with a hopper. There were basically two types: the shaker and the reverse air type. The pulse jet collector followed. All of these devices used tubular socks of media arranged inside a housing above a hopper to catch the particulate as it was cleaned off the vertically mounted bags or tubes. These baghouses incorporate a tube sheet that holds the bag filters in place. The tube sheet also separates the collector into a clean and dirty side arrangement. The clean air side is called the *clean air plenum* (CAP). The dirty air side, *dirty air plenum* (DAP). The hopper is located below the DAP, so gravity helps drop the dust into the hopper. The conventional dust collector is designed to get rid of the dust in the hopper immediately as it is generated. A filter receiver type collector has an oversized hopper designed to hold dust/particulate for some time while the collector is still processing the dirty air stream.

## *Primary mechanisms used*

Fabric filter collectors primarily use sieving (a combination of impaction and interception) as the collecting mechanism. The combined porosity of the media and any previously accumulated particulate serve to produce small pores through which the new particulate must attempt to pass. This filtering or sieving action relies on the fact that the net opening at any given time is smaller than the particulate. Because the particle is bigger than the opening, it cannot pass through. After collection on the media surface or in the dust cake, various mechanisms are used to remove the particulate from the media. After that, the particulate settles by gravity in the device's housing.

## *Design basics*

The factors that affect sizing and performance of a collector are the material (dust) itself, the temperature effect on the air, gas, product, fineness of the material, (fume being an example), dust, and particulate loading in grains per cubic foot. These factors determine the type of collector selected, the housing construction required, inlet locations, fabric media selection, and dust discharge parameters. Dust collector manufacturers distribute application data inquiry forms that provide the answers to questions needed to specify the correct collector design and arrangement for a given application.

For example, it is important to know if the dust is explosive, statically charged, hygroscopic light, heavy, fine, wet, sticky, and so on. Do we need insulation, hopper heaters, and special equipment for discharging dust? Is the collector located inside, outside? Does the exhaust air go back to plant or outside? These are just a few serious questions meant to indicate just how important it is for us to know the details before specifying any collector.

After analyzing these parameters, the designer can then choose from among a wide variety of fabric filter collectors to solve the emissions problem. The most basic type is the shaker collector, named after its use of a shaking mechanism to dislodge accumulated particulate.

The shaker collector has tubular socks of a woven media suspended by a strap on the top of the bag connected to a mechanical shaking arm. No cages are required to hold the bags open and the lower end of the bag socks are clamped to the tubesheet located directly above the hopper. The dirty air enters the unit in the hopper section and is forced to go upward inside the socks. When the socks get plugged (blinded) the differential pressure goes up. This creates an electrical signal that shuts off the fan or closes a damper and shuts off the air flow into the collector. The shaker mechanism then shakes the filter socks for an adjustable period, dislodging the dust cake allowing it to fall back down into the hopper. Shakers use a light woven fabric media designed to be very flexible. After a time, the shaking stops, the damper opens, air flows through the collector. The problem with the shaker is that it cannot operate continuously because the process air and ventilation system must be shut down for it to clean. To achieve continuous operation, compartmentalized shaker units with some modules operating cleaning process air and some modules off-line cleaning filters are required. Also the light-woven, flexible filter media is not particularly efficient at removing the dust from the air, making the shaker suspect as an air pollution control device. The shaker is considered a low-energy intermittent use collector. The filter media does not get worked very forcefully during cleaning, which can be an asset relative to filter life in high heat or corrosive applications.

The reverse air collector is built in numerous configurations. It is a moderate energy device. Generally it uses a caged needled fabric tubular media making it a pretty good choice for air pollution control applications. The reverse air cleaning principle is to use an extra air mover for cleaning filters. This extra air mover produces a higher pressure than the air flowing through the collector; hence, a flow of air through the cage and media from the clean side of the filter dislodges the particulate from the dirty side allowing it to fall into the hopper. The frequency and duration of the cleaning cycle is much the same as the shaker type. This reverse air flow is usually better at cleaning than gently shaking the filter bag. The time of the cleaning cycle is much the same as the shaker. Again this is particularly true when the collector is set up in modular fashion with some sections of the collector on line cleaning process air and some sections off line cleaning filters. Cleaning the filters off line is easy because there is no process air pressure holding

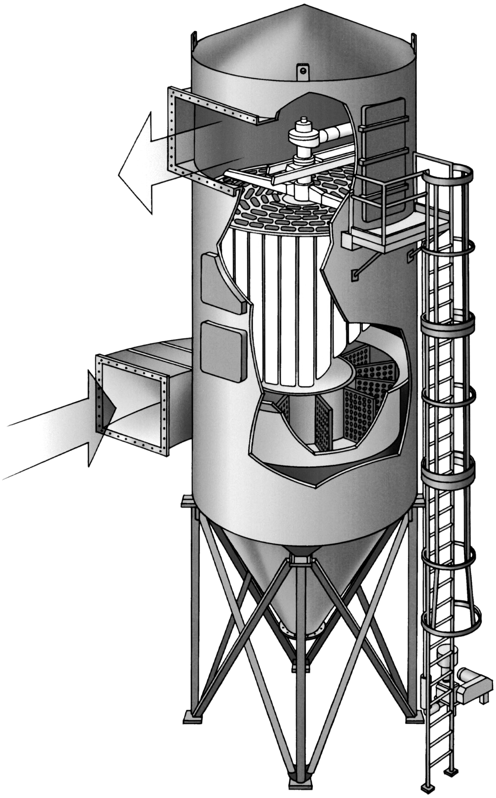

*Figure 7.3* Reverse air collector (Donaldson Company Inc.).

particulate on the filter bag surface. The only real problem with reverse air collection is that controlling the air, on and off, during cleaning cycles on modular arrangements is complex and costly. Figure 7.3 shows an industrial reverse air collector. The moving arm in the center of the vessel applies a reverse pulse of air to individual tube rows. Other reverse air collectors break the housing into compartments using isolation valves. Using blowers, the air flow through the compartment being cleaned can be reversed, thereby cleaning the media.

Some reverse air collectors are built with tube sheets low directly above the hopper with dirty air flowing upward inside uncaged bags and also with the tubesheet high under the CAP with dirty air flowing to the outside of caged bags. Reverse air collectors are also built in a cylindrical tall form configuration as in Figure 7.3. Typically, operating on line, a continuously revolving arm blowing the higher cleaning air pressure down inside the filters is used as in our previous example. The solid product falls down between the bags into the hopper. The round unit with the single revolving cleaning arm is a single module cleaning a few filters at a time on line making it a stand alone collector. This is especially true when the reverse air cleaning fan is located within the collector. Some models require an external fan or blower for cleaning energy, which adds to complexity, cost, space, and moist air cleaning potentials.

An inherent problem with round collectors is they do not use filter space well. Many, many more filters can be located in a square or rectangular configuration. This becomes increasingly important in large installations in the space-saving sense. Also the tall form, cylindrical design does not lend itself to the architectural aesthetics' of the modern low profile industrial park. However, all and all, the reverse air does excel in some applications especially grain, wood, paper, and other floating particulate. The cleaning cycle off line is long enough to free the dust from the filter for an appreciable time so it can drop into the hopper. The model with a low tubesheet with uncaged filter bags is a good choice for heavy loadings in hot lime, cement, and kiln processing applications as the cleaning energy is not too intense to break filters down. Also the mineral product is heavy enough to drop out of the bags and gravitate to the hopper.

The pulse jet collector is a high energy cleaner as it uses high-pressure air blown down inside caged filter bags in bursts of 20 to 80 msec. Pulse jets use filter bags with cages that are suspended from tubesheets between the DAP and CAP. Needled felt filters are used for hi-cleaning efficiency style, making it a good air pollution control device. This high pressure air is typically directed through a Venturi, to increase air volume, raises the air pressure inside the filter over the process air flowing through the collector and the shock wave blasts the particulate off the filter bag where it drops into the hopper. The pulse jet can be round, square, rectangular, short, tall, very large or very small. It can be modified easily for trough, pyramid hoppers, high or low inlets, walk-in or trapdoor CAPs allowing for service in clean air atmosphere. It uses common factory compressed air for cleaning instead of an extra fan or positive displacement (PD) blower. Some problems associated with pulse jets are that the high energy imparted to the filter breaks filter media down, particularly in high heat and or chemical corrosive atmospheres. Also the location of the Venturi is important with respect to the tubesheet. With the Venturi located in the filter bag, itself a negative air pressure exists above the Venturi lip down in the bag area, creating a suction pressure rather than positive air pressure at the top of the bag during cleaning. This leads to buildup of product under the tubesheet. It also takes the filter area of an 8-ft bag and effectively turns it to that of a 7-ft bag. A Venturi above the tubesheet eliminates this phenomenon.

The isometric view of a pulse jet collector is shown in Figure 7.4. In this unit, the gas inlet plenum is shown to the lower left and the cleaned gas outlet is at the upper right, as part of a discharge plenum. The cutaway shows the bags arranged in rows in the collector. The bag access is through the top of this design. The rectangular sections at the top of the collector are doors that are removed for bag and Venturi access.

Pulse jet collectors can be configured in a variety of ways. In some cases, the gas inlet must be located up high. Figure 7.5 is of a pulse jet collector designed with a high gas entry inlet. It is also equipped with a "walk-in" type clean air plenum (the chamber located above the Venturis).

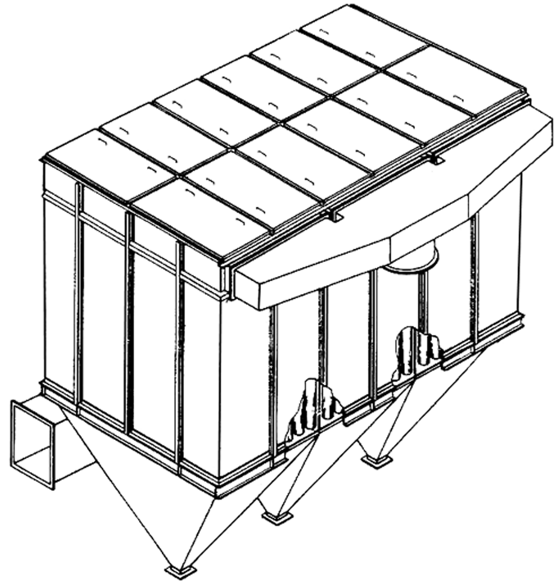

*Figure 7.4* Pulse jet baghouse (Bionomic Industries Inc.).

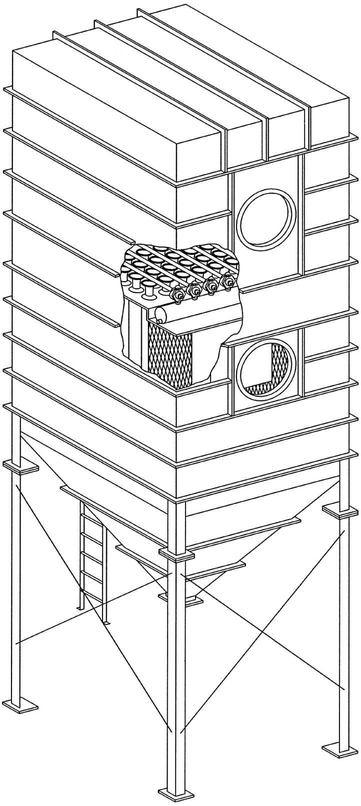

*Figure 7.5* Pulse jet collector with high gas inlet (Steelcraft, Corp.).

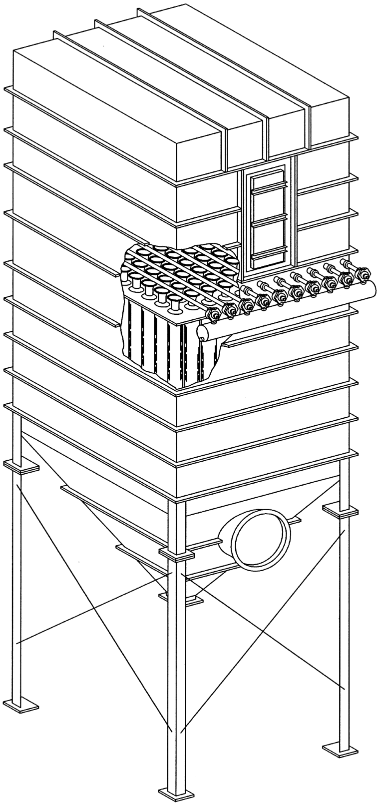

*Figure 7.6* Low gas inlet pulse jet collector (Steelcraft, Corp.).

Figure 7.6 shows a similar collector, but equipped with a low level gas inlet.

Pulse jets have the ability to blast dirty tacky product off the bag. If the particulate is moderately heavy or in clumps, it will drop into the hopper. If it is light or floats easily it can get pulled right back onto the bag immediately after the short duration cleaning pulse. Pulse jet self-cleaning cylindrical cartridge dust collectors use nominally 6- to 14-inch diameter × 26-inch long pleated filters. Typical designs are shown in Figures 7.7 and 7.8. They were originally thought of as clean air filters because the filter design and cellulose media type provided very high cleaning efficiency. They were and still are used to clean ambient air or as final filters (after filters) following heavy duty conventional fabric filter grade collectors. The pleats provided much more filter area than a round 4- or 6-inch diameter tubular bag. The filters less cages were short, easy to handle. The collector holding them could be compact. Filter service could be done in clean air outside the collector on the side of the unit. The problem was initially as cartridge units started to be sold as true front line industrial collectors, the tight pleats would plug up due to heavy dust loading and blind the filters prematurely. To solve this problem the perforated metal around the periphery of the filters was

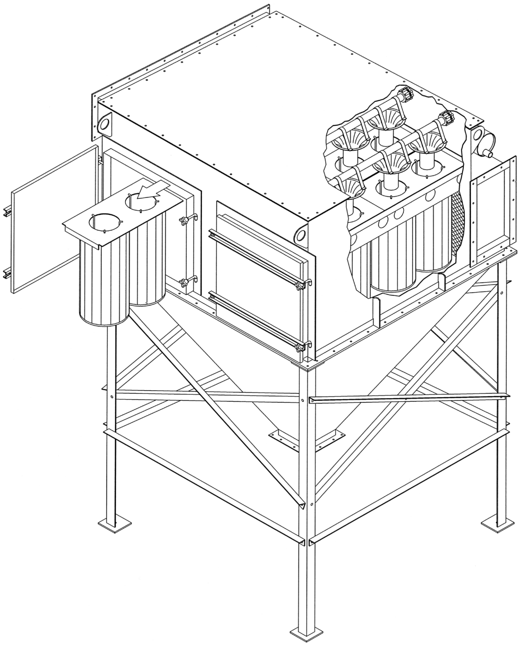

*Figure 7.7* Cartridge collector (Steelcraft, Corp.).

removed and pleat spacing was opened up so dust could be blown out of the pleats easier and off the filter. Heavy duty spun bond polyester media became popular. Filters were made with filter bag geometry allowing for replacement of round filter bags in other type collectors with pleated filters (more area) in the 4- to 6-inch diameter range. Currently many styles of self-cleaning pleated filters are used in industrial processing. They are compact, service easily, and can tolerate moderate loadings at high levels of cleaning efficiency. They use compressed air for cleaning energy like pulse jet baghouses. Although they are still not the best for heavy loadings and aggressive dusts, pleated filters continue to gain in the industrial marketplace. The fact is nothing cleans easier than a smooth, round shape.

There are many types and versions of dust collectors within the various types. This is because there is a myriad of different applications and certain designs are best suited for certain applications. In selecting a collector for a given job it's critical to understand the details of the process completely. It's also critical to understand how the collector works in detail so a match can be made.

Basically the best dust collector for the job will require the least overall cleaning energy and cleaning cycles to perform. It will operate at low pressure differential over the filters, holding fan energy down, and will provide long efficient filter life and infrequent service.

This tells us that when the dirty air enters the collector the dust/particulate should take the shortest path to the hopper discharge and out. The

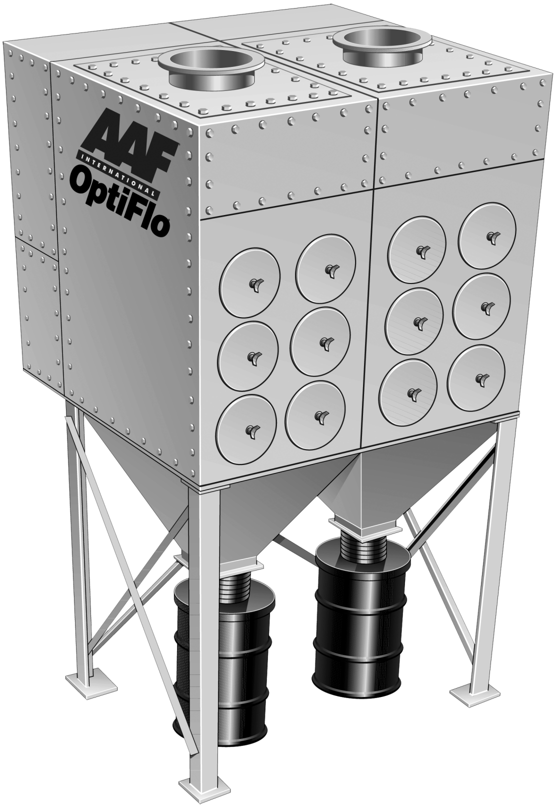

*Figure 7.8* Side access cartridge collector (American Air Filter).

filters should see only the lighter particulate/dusts that will build up a permeable filter cake to be cleaned off occasionally.

The prime considerations in collector design are inlet location, and velocity and direction of dirty air flow inside the collector. For example, if the inlet is located below the filters, especially in a pyramid or conical hopper all the air must go upward directly impinging particulate into the filters. As the air/dust flows up between the filters, the air velocity (rising) increases carrying the particulate up again and again into the filters. The dust has a hard time getting down past the inlet blast of air into and out of the hopper. On the other hand if the dirty air inlet is located near the top of the filters, the dirty air flow must go downward directly toward the hopper or at worst horizontally onto the side of the filters. When filters need cleaning the dust/particulate cake simply drops off into a quiet hopper less any potential for air pushing it upward back onto the filter media.

Sizing fabric filters starts with an air-to-cloth ratio that field experience has shown will work on a certain application. The air (cubic feet per minute) to cloth (media area) calculation gives us the face or *impact velocity* of dirty air as it hits the filter media. Lets assume we have a ventilation process requiring 7200 ACFM and the suggested ratio is 6/1. 7200/6 = 1200 ft. cloth required in the dust collector (nominally). 7200/1200 = 6 CFM/$ft^2$ or 6 ft/min face velocity. As you can see this provides us with a relative value for the volume and velocity of dirt and air flowing through the surface of the media. The higher the gas velocity, the harder it is to push the dust off because you are pushing the dust back into the oncoming gas stream.

When using a compartmentalized off-line cleaning system, air-to-cloth ratio is a much less important factor as no process air is flowing into the filters. Cleaning off line is very easy at any air-to-cloth ratio.

Let us assume, again, that we are comparing two collectors, both processing 7200 CFM. The ratio being considered is nominally 6/1 meaning we need about 1200 $ft^2$ of filter media. One collector, the tall unit, needs 60 filters/cages at 6.2-inch diameter × 12 ft long to get approximately 1200 ft media. The filters are located on an 8-inch center grid pattern. The housing in plan is 33.2 $ft^2$; the filters in plan, 11.76 $ft^2$. The open area between the filters is 33.2 – 11.76 = 21.44). So, 7200 CFM/21.44 = 336 ft/min velocity. The other collector, the short one, needs 90 filters/cages × 8 feet long each. With all the other parameters and geometry the same, the velocity between filters is only 233 ft/min. About 30% lower! The tall filter will be cheaper because it will have fewer filters, cleaning valves, and a smaller housing but the fact is it will not perform as well as the shorter fatter unit.

One way to determine acceptable can velocity as it relates to air-to-cloth ratio collector performance is to use an industry rule of thumb for maximum allowable rising velocity on particulate.

120 ft/min max for up to 10 lb. cu/ft product
240 ft/min max for up to 20 lb. cu/ft product
300 ft/min max for up to 30 lb. cu/ft product
360 ft/min max for up to 50 lb. cu/ft product
400 ft/min max for up to 70 lb. cu/ft product

Using lower velocity is always best. Products that float like ultra fine light dust, bee's wings, feathers, and fiberglass fines all need special consideration. Use collectors designed for that service. What we are doing here is comparing the terminal settling velocity of the dust particle in a relative sense to the velocity of the air between the filters. Four hundred mesh soft wood flour at 8 pcf is much harder to drop out in a hopper than 30 mesh silica sand at 75 pcf. Grain husks, paper trim, and fiber from buffing wheels act differently than 94 pcf Portland cement. Selecting or specifying a collector is really a matter of common sense and the experience of the user or manufacturer. In some cases, like dry $SO_2$ removal we want a coating of soda bicarbonate on the filters, same goes for pool lime on ultra fine dust or fume. In these applications, a substantial filter cake provides ultrafiltration. Using a modular setup with off-line cleaning is a good idea on these continuous bag coating applications.

Air-to-cloth ratios are only guidelines. Many other factors affect performance. For example, the aspect ratio evaluates air-to-cloth ratio as it relates to dirty air velocities between filters in short or tall form collector. It is a very important consideration because high velocity in low inlet designs will not allow dust/particulate to drop down into the hopper.

## *Operating suggestions*

It should be obvious from the previous comments that, to operate a fabric filter collector efficiently, it must first be sized correctly and then operated so that the collected dust (particulate) is removed properly. The mechanism to remove the particulate from the media, and the mechanism to remove the particulate from the hopper must be kept in good operating condition. If a shaker type collector is used, the mechanical mechanism to shake the bags should be inspected and kept properly lubricated. If a reverse air type unit is used, the reverse air isolation dampers and their actuators should be periodically inspected and maintained. These dampers and valves are critical to the reverse air's proper operation. If a pulse type collector is used in cold climates, the compressed air supply should be conditioned or dried so that the fittings and valves do not freeze. The pulse timer (usually electronic) should be protected from voltage spikes so that its timing circuitry remains operable.

If the collector is used on a hot source containing acid gases (such as $SO_2$ and HCl) and periodically is shut down, the collector should be thoroughly insulated and hopper heaters installed as needed. Some collectors utilize hot air heating systems that recirculate air in the baghouse to uniformly distribute the heat. Failure to do so allows the baghouse environment to pass below the acid dewpoint, which causes localized corrosion and damage.

For pulse type collectors, various Venturi and cage materials of construction (MOC) are available. These include coated Venturis, alloy wire cages, and so on. If the application is corrosive, attention should be paid to the MOC of the Venturis and cages. If the dust is explosive, special bags with grounding wires can be installed. Obviously, the grounding system should be inspected often to make certain that it is operating as intended.

For a hopper discharge problem in which the dust tends to bridge over the dust outlet, bin activators (shakers) or acoustic horns can often be used to break up such bridging. Usually, a continuous flow of dust out of the collector is better than an accumulate and dump type scenario.

On pulse type units, the pulse headers can often be removed from the top (clean air side) but space must be allowed for their removal. Some designs allow for the headers to be pulled out laterally. Again, one must plan ahead for their removal.

If a bag breaks, you usually are in trouble. For that reason, various vendors offer broken bag detectors that scan the clean air plenum for signs of particulate. If a broken bag is found, it is not uncommon to replace the row in which that bag was found as well as the adjacent rows. When one bag fails, it usually is a sign that others will follow.

To reduce bag injury upon installation, the bag tubesheet holes should be thoroughly deburred. New bags should be installed vertically (if that was their original orientation), not on an angle. This prevents the cage from chaffing the media.

On pulse type units, the bag pulse frequency and duration should be carefully selected (most vendors have their required settings based upon experience). The pulse start sequence can often be initiated by a pressure switch so that a precoat of particulate is allowed to build up first. Every pulse in some small measure reduces the life of the bag so pulsing should be done only as needed.

Shaker type collectors often have media tensioning devices that require initial setup and checking. The collector manufacturer asks that these measures be followed to get the most use from the media. Unfortunately, these details are often overlooked.

Fabric filter collectors provide excellent service when properly applied to the application and when they are operated as the designer intended.

# chapter 8

# Fiberbed filters*

## Device type

*Fiberbed filters* are specialized filtration devices that are primarily designed to coalesce and capture liquid contaminants such as acid mists and aerosols the viscosity of which is low enough that they flow or can be made to flow from the fiberbed surface.

The design gets its name from the media used. It consists of micron-size fibers that are compressed tightly in a mat or bed, which provides the surface area and gas path thickness needed to capture the pollutant.

These designs are somewhat related to filament/mesh scrubbers in that they utilize target fibers in a wet environment. The fiberbed filter fibers, however, are in the 5 to 15 μm diameter range, or a fraction of the diameter of the filament or mesh type scrubbers. The fiber spacing is therefore closer in a fiberbed filter and, in general, it can remove smaller diameter aerosols.

Figure 8.1 shows a cutaway view of a fiberbed filter unit. The individual filters (sometimes called candles, given their shape) are mounted on a tube sheet in either a hanging or sitting position. The unit shown shows them hanging from a tubesheet. The small J-shaped pieces under each candle are liquid traps that allow the liquid to drain, but prevent gases from bypassing the filter.

## Typical applications and uses

The following are brief descriptions of common fiberbed filter applications. With one exception, they all involve the collection of liquid droplets. In general, if the exhaust stream is wet or the particles in the exhaust are liquids, or if a high efficiency filter that can withstand a high pressure drop is required, then fiberbeds are a potential control option.

---

* This chapter is contributed by Joe Mayo, Advanced Environmental Systems, Inc., Frazer, Pennsylvania.

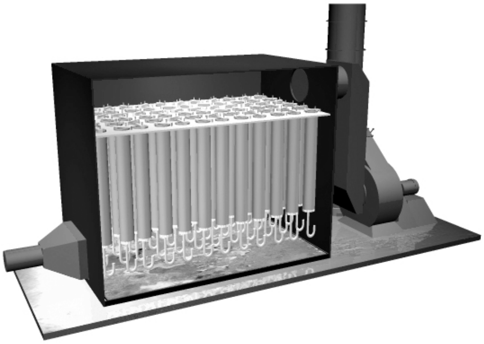

***Figure 8.1*** Cutaway of fiberbed filter (Advanced Environmental Systems, Inc.).

## *Acid mist*

Collecting acid mist was the first significant commercial use of fiberbed filters and is still the largest application for them. Most sulfuric acid manufacturing plants use fiberbed filters in the absorbing and drying towers to remove $SO_3$ and liquid acid mist from the air. Fiberbeds are also used to remove residual mist in the exhaust of wet scrubbers, particularly hydrochloric acid scrubbers, because the reaction with the scrubbing liquid can be violent and creates a visible emission from the scrubber. These are typically cool and clean applications, requiring no prefiltration or cooling.

If additional fiberbed surface area is required, a nesting or concentric type filter can be built. In these designs, as shown in Figure 8.2, a fiberbed is mounted within another fiberbed, thus increasing the face area of the media and slowing the gas velocity. The reduced gas velocity is said to improve the capture of aerosols and mists.

## *Asphalt processing*

These include coaters, saturators, converters (blow stills), storage tanks, and truck loading/unloading facilities. The coaters and saturators used in roofing manufacture often have solids that must be prefiltered before the fiberbeds. Saturator exhaust may also require cooling. Tanks and loading racks usually achieve adequate cooling through radiant losses in the ductwork, and have little solid particulate. Asphalt converters are also relatively free of solids, but may require cooling. Such a unit is shown in Figure 8.3.

## *Plasticizer/vinyl/PVC processing*

Vinyl and PVC processing, such as calendaring, coating, and curing operations emit oily plasticizers and other materials that can cause a substantial exhaust stack plume. While oven exhaust must usually be cooled to condense the vapors, coater and calendar emissions are often captured by canopy hoods that draw in ambient air that cools the exhaust. Prefilters are usually not required.

***Figure 8.2*** Filter within a filter (Monsanto Enviro-Chem Systems, Inc.).

***Figure 8.3*** 10,000 ACFM system with prefilters (Advanced Environmental Systems, Inc.).

***Figure 8.4*** With prefilters, water cooling coils on curing ovens (Advanced Environmental Systems, Inc.).

## *Coating/laminating*

Many coating and laminating processes, especially on fabric and vinyl, create visible emissions that fiberbed filters can effectively control. The emissions are typically generated during the drying and curing phase of the operation, so the exhaust is hot and usually requires cooling to condense the vapors. The cooling coil housing is on the right-hand-side in Figure 8.4.

## *Electronics*

Electronic component manufacturing, such as solder leveling, can create oil mist from the fluxes used. Fiberbeds can also be used as point source collection for acid mists, reducing the load on house scrubbers and reducing salt formation in the ductwork. Materials of construction must be carefully chosen because many of the materials are potentially corrosive.

## *Textile processing*

Textile tenter frame ovens and dryers can emit a mixture of pollutants including oils, resins, waxes, tars, and various solids, producing a prodigious stack plume. This hot, dirty exhaust requires both cooling and prefiltration. The mineral oil–based emission from a tenter frame can be collected using a fiberbed as shown in Figure 8.5. Note the induced draft fan and exhaust duct located to the right of center.

## *Metalworking*

Coolant and oil mists are often generated by the high temperatures at the tool working surface. Grinding operations in particular usually require

***Figure 8.5*** 30,000 ACFM system on tenter frame (Advanced Environmental Systems, Inc.).

prefilters to protect the fiberbeds from swarf. Such a system is depicted in Figure 8.6. A water washdown system is sometimes used to flush the interior of the system free of the water-based coolant to avoid long-term growth of bacteria inside the system. In general, when insoluble particulate or fibers are present, a prefilter should be used.

### *Lube oil vents and reservoirs*

Oil lubricating systems, such as used on gas and steam turbines, often emit oil mist due to the hot oil returning from the turbine. No cooling or prefiltration is usually required. The compact cylindrical design of the fiberbed shown in Figure 8.7 make these easy to install on lube oil vents. These also serve to recover oil and thereby reduce maintenance expenses. A similar configuration is used on ocean-going naval vessels for crankcase ventilation system (mentioned below).

### *Incinerator emissions*

Incinerators that burn toxic, hazardous, or radioactive materials may produce submicron particles that must be controlled. Typically located downstream of a wet scrubber, the fiberbeds can be made of polyester or other materials that can be completely incinerated to dispose of spent filter media.

### *Internal combustion engine crankcase vents*

Internal combustion engines have crankcase oil mist emissions due to blowby around the piston rings that are economically controlled by fiberbeds. This application is similar to lube oil reservoir vents.

*Figure 8.6* 1000 ACFM on five-station machining center (Advanced Environmental Systems, Inc.).

*Figure 8.7* 300 CFM oil vent unit (Advanced Environmental Systems, Inc.).

***Figure 8.8*** Packaged fiberbed with prefilter (Advanced Environmental Systems, Inc.).

## *Precious metal recovery*

Process catalysts such as palladium gauze in nitric acid manufacturing can be lost into the process stream. The high temperature stability and structural strength of fiberbeds make them ideal for recovering these valuable metals. This is the unusual case of fiberbeds being used to collect solid particulate.

## *Vacuum pumps*

Vacuum pumps mechanically generate oil mist during their operation, and unless they are evacuating furnaces are usually cool. Some applications such as silicon crystal growing contain solid particulate (silicon dioxide) and thus require prefiltration. The prefilter in the unit shown above removes the particles that could plug the main filter.

Another method of prefiltering involves encasing the main fiberbed candle with a removable outer filter. The man in the following picture, Figure 8.9, has these prefilters draped over his shoulder. Note the retaining cage to the left.

You would not be well advised to use fiberbed designs to clean gas streams containing inert particulate or liquid aerosols that do not flow by gravity or resist water or solvent washing. Solid particulate can blind the filter. This problem is often solved through the use of prefilters or prescrubbers.

***Figure 8.9*** Removable filter media (Monsanto Enviro-Chem Systems, Inc.).

## *Operating principles*

A fiberbed filter uses a densely packed bed of microfibers placed in the path of the contaminant gas stream. The fibers become obstacles that the gas and contaminants must traverse. The closely spaced arrangement of the fibers improves the probability that a contaminant, such as a liquid aerosol or acid mist, will adhere to and coalesce upon the fibers. As this procedure progresses, the liquid builds up to a point at which it can drain by gravity.

## *Primary mechanisms used*

Fiberbed filters operate using three basic mechanisms: impaction, interception, and Brownian diffusion. Impaction and interception are popular mechanisms used in various gas-cleaning devices. Brownian diffusion, however, is primarily found in use in fiberbed collectors.

As air containing particulate flows through a filter, the air flows around any obstacle (such as a filter fiber) that is in its path. But a particle with sufficient mass and momentum (such as a 5 μm particle) will not. Instead, the particle's inertia will cause it to continue along its original path until it strikes a filter fiber and is collected. This is termed *impaction*.

Somewhat smaller particles, those in the 1 to 3 μm range, are collected by *interception.* Because these smaller particles have less mass and therefore less momentum, they tend to follow the airstreams around a filter's fibers. However, they can stray a bit from the normal streamline and can graze the side of a fiber and be collected.

Very small particles (less than 1 µm) have very little mass, and as a result follow the air as it winds its way through a filter. These particles have substantial random motion, called *Brownian diffusion,* due to collisions with nearby air molecules. This almost vibratory motion allows them to move independently of the motion of the bulk airstream. Like gases and chemical solutions, the particles tend to migrate or diffuse from areas of high particle concentration to areas of low concentration. As the particles contact the filters' fibers and are collected, the concentration in the air near the fibers' surface goes to zero. This cycle of diffusion and collection is what drives the removal of the submicron particles.

Because slower operating velocities increase the time available for the diffusion to occur, fiberbeds have infinite turndown capability. As the collected particles coalesce into larger droplets on the fiber's surface, they drain from the filter by gravity.

One of the pioneering fiberbed designs was the Brinks mist eliminator. Manufactured by Monsanto Envirochem, the fiberbeds are made from glass or polymer microfibers often in the form of candles. Figure 8.10 shows a Brinks fiberbed mist eliminator.

***Figure 8.10*** Brinks mist eliminator (Monsanto Enviro-Chem Systems, Inc.).

## *Design basics*

Fiberbed filters operate at inherently low vapor velocities both to maximize performance and to minimize pressure drop. Face velocities of 0.5 ft/sec or less are common. In general, the higher the liquid loading, the slower the required gas velocity. This often results in a significant number of candles for even low gas volume applications.

An inner and outer cage usually supports each candle. The cage may be made from metallic or nonmetallic mesh of high open area. These cages retain the compressed fiber material that is captured between the cages. The outer cage is typically designed to be removed for re-packing.

Because there is a time delay within which the captured aerosols or mists coalesce, a new candle can take a number of hours to wet out. The fiberbed achieves its best performance once the fibers are coated with a film of liquid (provided by either the contaminant itself, an irrigation system, or an administered fog or mist). It is not uncommon for a fiberbed to exhibit low efficiency when new.

The candles themselves typically use a mounting flange that is bolted to the tubesheet. The tubesheet must be designed for the laden weight (wet weight) of the fiberbed candle, not just its dry weight. Given that the tubesheet is weakened be the openings required for the candles, special care must be taken in stiffening the tubesheet sufficiently.

The accumulated liquid must be given a path through which it can drain otherwise the candle retains the liquid and its effective open area decreases. Small J-shaped traps are often used on each individual candle to allow the liquid to drain, while preventing liquid from bypassing the candle and reducing efficiency. These traps must be liquid filled before operation. They must also be of sufficient depth to seal at the maximum anticipated pressure drop. This usually results in a seal leg of 12 to 18 inches overall length.

## *Operating/application suggestions*

Fiberbed filters can provide very reliable service on applications where the contaminants flow from the filter media rather than being retained on the media. It is not unusual for candles to be used for many years without replacement in acid recovery service, for example.

There are some measures that can be taken to maximize the useful life of a fiberbed system.

### *Filter cleaning*

Fiberbed filters cannot be cleaned in the traditional sense, as their structure is delicate and easily damaged. Accumulations of soluble materials such as salts can be removed by irrigating or flushing the filter with water or another suitable liquid. Waxes and tars can often be removed by heating the filters indirectly through injection of low pressure steam into the filter vessel. Several hours of heating (with the system shut down) can liquefy waxes and other materials, enabling them to drain from the filters. Detergent sprays can sometimes also be used to flush insoluble materials from the filters, but this procedure usually has to be done on a daily basis to remove the insoluble material before they accumulate.

### *Fiberbed filter life*

Fiberbed life in any given application is determined by four major factors. These are the concentration of foulants (materials not draining from the filters), fiberbed surface area, starting pressure drop of the filters, and the pressure available from the exhaust blower. As foulants build up on the filters, the pressure drop across the filters increases. When the limit of the fan static pressure capacity is reached, the filters must be replaced.

While the foulant concentration cannot be changed, the other three items can. Increasing the number of filters both increases the surface area and decreases the pressure drop. Increasing the pressure capability of the fan further increases fiberbed life, because this allows the pressure drop to increase further before reaching the fans limit.

Because all the pressure capability of the fan is not needed when the filters are clean, a damper or variable frequency drive (VFD) is used to control exhaust flow. A damper would be mostly closed at startup, and a VFD would be running the fan at a low rpm. As the pressure drop increases, the damper is opened or the VFD speeds the fan up to maintain flow. When the damper is fully open or the fan is running at maximum speed, the limit of the system has been reached and the filters should be replaced.

With all of these variables it is difficult to make generalizations, but in fiberbed systems properly designed for the application, filter life is usually anywhere from 2 to 6 years.

### *Fire protection if the contaminant is combustible*

Fiberbeds are often used to collect combustible contaminants. This can be accomplished safely if a few precautions are taken.

Fire protection is an important part of any system collecting combustible materials. Fires usually begin upstream of the fiberbed system, for example in a direct fired oven. If the fire spreads to the oil-saturated fiberbed filters, they may catch fire. Burning fiberbeds are difficult to extinguish because their thick walls act as an insulator.

Water sprinklers are the best choice for fire protection, because they can be used to flood the fiberbeds. Water not only extinguishes the fire but also carries away heat, reducing the possibility of reignition. Isolating the fiberbed chamber and smothering the fire with steam or carbon dioxide can also be used. In any case, the filters should be removed from the vessel as soon as possible after a fire and monitored to ensure they do not reignite.

Fire detectors are quite useful in minimizing fire damage. They should be located on the inlet and the outlet to the system, and should be tied into the control system to shut down the system fan (to reduce the available oxygen), sound an alarm, and activate diversion dampers if used. They are available in a variety of temperature ranges, and should be selected based on the expected maximum temperatures expected in the application to avoid unnecessary shutdowns.

Fire dampers can also be used to minimize the spread of a fire. The damper is located on the inlet to the fiberbed system, and closes when temperatures indicative of a fire are detected. This stops the flow of air through the filter vessel, which can occur even if the exhaust fan is shut down, due to chimney effect.

# chapter 9

# Filament (mesh pad) scrubbers

## Device type

Filament or mesh pad type absorbers have proven themselves very effective in the absorption of water-soluble gases. When constructed in a sufficiently dense media panel, they can be used for the collection of airborne bacteria and spores. These devices typically use woven or layered filamentaceous mesh layers onto which a spray of liquid is administered. The contaminant gases, particulate, or both pass through these layers of mesh wherein the contaminant and liquid are brought into intimate contact, thereby promoting gas absorption. Various vendors have developed proprietary designs of this generic type with hundreds of successful installations.

## Typical applications

Filament and mesh pad type scrubbers are often used to collect inorganic acid vapor emissions from process reactors or storage tank vents. They are also used after particulate removal devices to enhance the absorption of gases. Laboratory hoods and point of use scrubbers often use wetted filament or mesh pad scrubbers.

They are often used on large gas cleaning systems, for example, for acid concentration and capture. Figure 9.1 shows a multistage wet scrubber on a superphosphate fertilizer plant for the recovery of fluosilicic acid. This system consists of a Venturi scrubber for particulate control, a multistage wetted Kimre pad unit for stepwise acid gas concentration, and a preformed spray scrubber for polishing the emission using pond water. The water flows upstream from the preformed spray scrubber to the filament type absorber. The fluosilicic acid is concentrated in three sprayed stages in the filament type scrubber, which is housed in the rectangular box on the left (ahead of the fan). The mesh pad type scrubber is shown in the foreground of Figure 9.2.

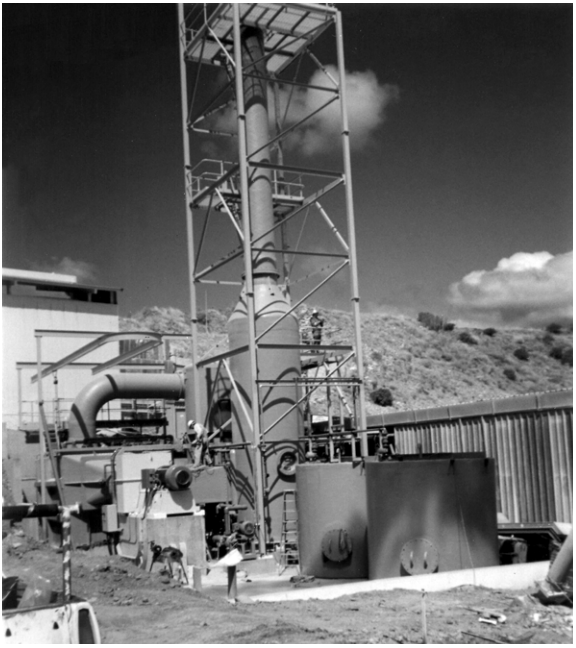

*Figure 9.1* Multiple stage superphosphate plant system (Bionomic Industries Inc.).

*Figure 9.2* Crossflow meshpad type scrubber (Bionomic Industries Inc.).

Filament or mesh pad type scrubbers are generally not used where insoluble particulate is present or where a precipitate can form during chemisorption.

## *Operating principles*

In these devices, the mesh serves a number of purposes. It extends the liquid surface in a compact space thereby providing the liquid surface area required for effective gas absorption. It also helps hold up the liquid to allow sufficient time for the contaminant gas to diffuse to the liquid surface and be absorbed. The compact nature of the mesh also reduces the path length (distance the gas molecule must travel to the liquid surface), thereby, in theory, enhancing the rate of diffusion per unit volume of the media. Because the media is typically layered, the gas molecules are caused to move back and forth through the media thereby increasing the probability of absorption into the liquid surface.

## *Primary mechanisms used*

The filament or mesh pad type mass transfer device is primarily used for gas absorption where the particulate loading is low. The mechanisms used are diffusion, gas absorption, chemisorption (if the liquid contains a reactive chemical), condensation (if the liquid is colder than the saturation temperature of the gas stream), interception, Brownian motion, diffusiophoretic and thermophoretic forces, as well as impaction if larger particulate is present.

Given the narrow openings between filaments or mesh layers, these devices are typically not used where solid particulate is present. The liquid spray or accumulation of liquid on the mesh tends to draw particulate into the mesh where the particulate can become lodged and difficult to remove. They, however, offer good removal characteristics for acid aerosols and other flowable liquid particulate down to about 1 to 2 μm aerodynamic diameter.

## *Design basics*

Filament or mesh type devices can be configured for horizontal counterflow gas/liquid interception, or crossflow wherein the gas and liquid move concurrently at least for a portion of their movement.

The liquid is sprayed at a rate of 0.5 to 4 gpm per square foot of media surface. The design face velocity of the media is dictated by the allowable pressure loss. Gas speeds of 2 to 6 ft/sec are commonly used. The pressure loss per media stage can vary from less than 1 inch water column (w.c.) for a loosely woven pad to over 6 inches w.c. for a multilayer, compressed pad.

The simplest filament or mesh pad type collector is a wetted mesh pad. Figure 9.3 shows a mesh pad removed from a vessel. This pad can be used in a vertical gas flow or crossflow arrangement. If the gas moves vertically, the pad can be sprayed from the underside to flush away water-soluble particulate or help drain away dissolved contaminants.

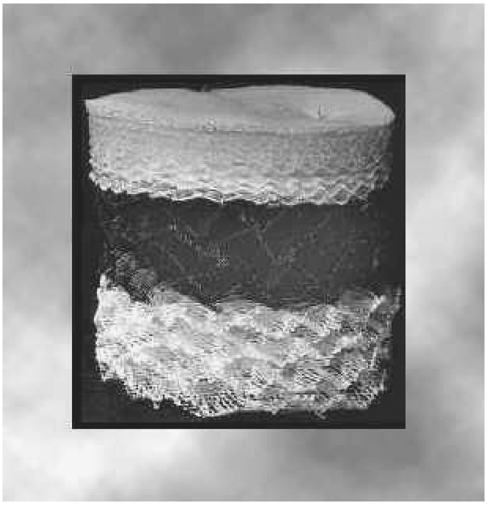

*Figure 9.3* Multilayer mesh pad (Kimre, Inc.).

*Figure 9.4* Crossflow scrubber (Kimre, Inc.).

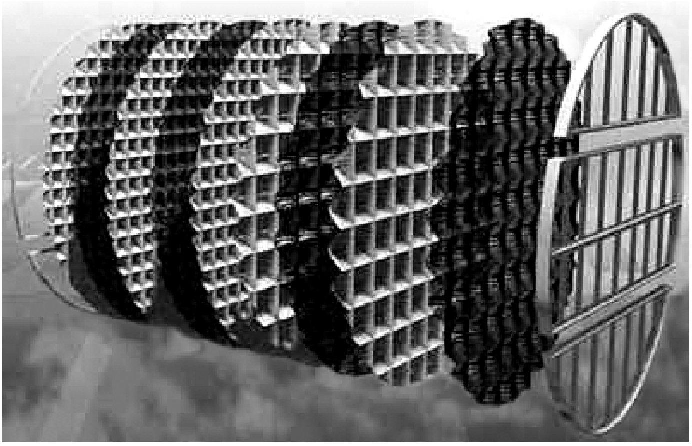

*Figure 9.5* Multilayered absorber module (Kimre, Inc.).

Figure 9.4 depicts a crossflow multistage filament type gas absorber supplied by Kimre Inc. for the absorption of soluble gases, in this case inorganic acids. The typical gas inlet velocity is 40 to 55 ft/sec and the vessel velocity is 2 to 6 ft/sec given the vapor loading and amount of sprayed liquid.

Figure 9.5 shows another unit of this type wherein multiple stages of proprietary mesh pad layers are used. Basically, the more open multilayer mesh is used first followed by increasingly more dense mesh units. Two or three stages of carefully selected mesh types are commonly used.

Another interesting and effective type of filament type collector, made by Misonics, Inc., is shown in Figure 9.6. This one uses a sandwich of square-cloth mesh layers (much like coated window screen) that is pressed together in a proprietary fashion to create a high-density media panel. The close proximity of the fiber strands in the panel greatly shortens the diffusion path and high mass transfer per unit volume results. This particular unit is equipped with a fog spray system (to the left) mounted ahead of the collecting pads (in the chamber to the right). The fog increases mass transfer and preconditions the gas stream before the media pads.

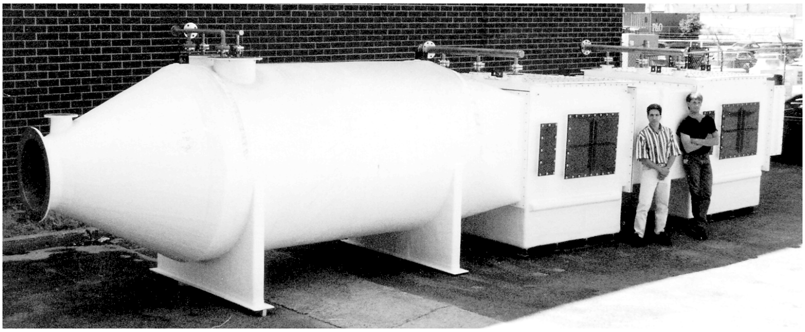

***Figure 9.6*** Crossflow scrubber with sonimist chamber (Misonix Incorporated).

These types of collectors have also been used to control dopant gases used in the manufacture of semiconductor materials. These gas flows are typically very low (a few liters per hour) however the gases can be difficult to scrub. Figure 9.7 shows a packaged unit that includes a recirculation pump and chemical neutralization system.

Sprayed with a suitable biocide, these type devices can also trap and control airborne bacteria and spores. They are therefore often used for laboratory hood applications.

Crossflow filament type units sometimes have the media inclined on a 10- to 15-degree angle with respect to the gas flow. This is done because the sprayed liquid does not take a purely vertical (downward) path. The gas velocity pressure tends to push the liquid in the direction of the gas flow. To help keep the gas in contact with the liquid, the media is thus inclined so that the gas helps hold the liquid in the media.

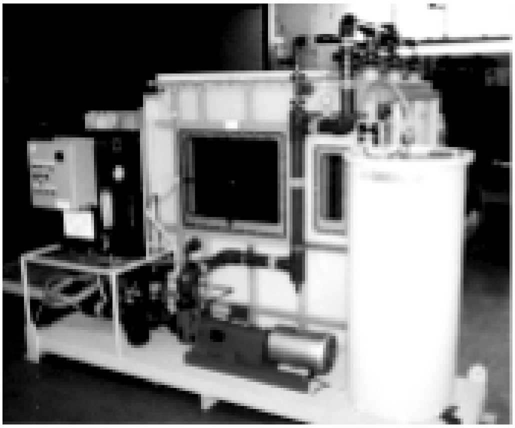

*Figure 9.7* Packaged scrubber for semiconductor application (Misonix Incorporated).

Crossflow units are often sprayed both from the front and from above. Interstage pads on multistage units are often run passively, that is, no sprays, but the upstream pad is run at a higher speed so some of its liquid agglomerates and entrains from the lee side of the pad, thereby wetting the downstream pad without overloading it with liquid. The first pad, in other words, serves as an agglomerator for the downstream pad.

## *Operating suggestions*

Because the various mesh types are proprietary, it is suggested that you contact the specific vendor regarding application and operating suggestions.

The filament type media is easily made into removable panels or pads therefore service pull space should be designed into any installation. It is not uncommon to have a spare pad assembly ready and waiting for transfer if the primary pad plugs. The superphosphate reference above, for example, has a built-in access rail mounted above hinged service doors built into the roof of the scrubber housing. The pads were designed to hang, much like pants folded over a hanger. The entire pad assembly can be pulled vertically upward out of the scrubber and moved away from the device while a new pad is installed.

Vertical flow mesh pad devices can sometimes be cleaned in place if sprayed from the bottom at the rate of 1 to 2 gpm/ft$^2$ of frontal surface area. They rarely can be cleaned on the run by backspraying from above because the pad acts as a check valve. The gas rising through the pad prevents the liquid from draining and the pad floods. This causes entrainment. The pads can, however, often be cleaned in place when the gas flow is zero, that is, the scrubber is off line.

Because the pads typically get heavier after use (through particulate or scale buildup), the panel size should be selected based on the laden weight of the pad, not its dimensions. Access doors should obviously be sized to allow the largest sized panel to be removed easily and safely. Holddown bars should be used to secure vertical gas flow type designs because the pads can tend to lift since the dry pads open area decreases as it becomes wetted.

A simple pressure drop indicator across the pad can provide a good indication of the pad′s condition. The various vendors have accurate dry and wet pressure drops for given gas flow characteristics so pressure drop increases can be used as an indicator of residual open area of the media. Quite often, this pressure drop is used to trigger a cleaning spray.

On acid gas applications, the vendors often suggest prewetting the pad(s). The vendor′s recommendations should be carefully followed to achieve the best performance.

## *chapter 10*

# *Fluidized bed scrubbers*

## *Device type*

Usually, the term *fluidized* has been applied to the two-phase mixture of gas and solids. Fluidized bed boilers use, for example, an agitated mixture of fuel (coal), combustion gases, and sometimes lime or limestone to enhance combustion while reducing emissions. The gas is injected into a mobile bed of solids. A two-phase mixture of liquid and gas can equally be called fluidized. This technique injects the gas into a mobile, agitated, zone of liquid. Because the speed of dissolution of gases into liquid is typically enhanced by stirring, the agitation in these designs is intended to increase the speed of mass transfer. The vessel velocities are therefore typically higher than other types of absorbers.

*Fluidized bed scrubbers* can be divided into three major categories:

1. Mobile media type units
2. Ebulating bed type designs
3. Swirling, coriolis induced, or co-mixing type

## *Typical applications and uses*

Fluidized bed type scrubbers are used primarily as gas absorbers where particulate is also present that could plug other absorber designs (such as packed towers). The particulate may arrive in the gas or liquid stream or be a product of the reaction of the absorbed gas and the liquid.

They are noted for their compact size, low-to-moderate cost, and the ability to absorb gases while resisting plugging.

Common applications include:

1. Pulp mill bleach plant chlorine and chlorine dioxide control
2. $SO_2$ control using sodium hydroxide or sodium carbonate
3. $SO_2$ control using a slurry (lime/limestone, MgO, etc.)
4. Odor control (mercaptans, $H_2S$, etc.)

5. Gas cooling and condensing
6. Prescrubbing (ahead of other devices such as wet electrostatic precipitators)
7. Fluorine abatement (scrubbing with pond water in the fertilizer industry)
8. Stripping volatiles from dirty water
9. Acid gas control
10. Ammonia absorption
11. Bio-slurry scrubbing
12. Humidifying biofilters
13. Where space is a premium

## *Operating principles*

The fluidized bed scrubber is related in many ways to the tray scrubber in that the fluidized bed scrubber is essentially a tray scrubber designed to operate at exceptionally high gas speeds. It is suggested that the reader also consult the tray scrubber chapter.

*Mobile media type* scrubbers include the universal oil products (UOP) turbulent contact absorber (TCA) or ping-pong ball type design wherein a movable media is supported above a support grid and below a bed-limiting grid. The TCA scrubber uses round balls that are agitated by the upward motion of the gases as the gases move through the vessel. The media motion is intended to increase gas/liquid mixing and help keep the media clean.

A more recent design is the Euro-matic Ltd. (U.K.) Turbofill™ scrubber that uses ellipsoidal (egg)-shaped media. The skewed center of gravity of the media causes the media to exhibit nutation or oscillation as the gases pass through the zone. If solids are present, three phases can exist simultaneously (gas, liquid, and solid). These scrubbers also use support and bed-limiting grids whose openings are smaller than the media size. The churning agitation of the media helps keep it clean. Figure 10.1 diagrammatically shows the action of the media.

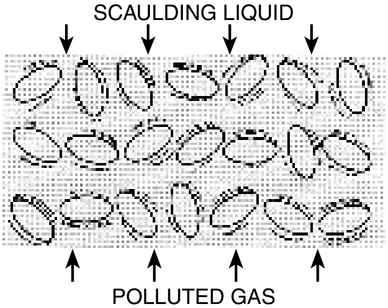

***Figure 10.1*** Nutating fluidized media (Euro-matic Ltd.).

*Ebulating bed type* scrubbers are similar to the mobile media type; however, they do not use media. Ebulating refers to the boiling type appearance of the fluidized bed. The liquid bubbles randomly much like a pot of boiling water. These designs incorporate perforated plates or mesh screen trays to provide high-velocity gas injection points that are used to fluidize the liquid and create the desired highly turbulent gas/liquid contact zone.

The *sieve tray scrubber* is one of the oldest ebulating type designs. The design consists of a vertical vessel in which at least one flat tray is installed perpendicular to the gas stream flow direction (upward). *Impingement tray* varieties, also of the tray scrubber family, use holes or perforations in the tray that are sufficiently small to allow the gas to pass upward through the hole but prevent the liquid from draining through. Figure 10.2 shows this type of scrubber. If the holes are enlarged, that is, the open area of the tray is increased, the gas velocity is insufficient to prevent the liquid from draining through the holes. The gas and liquid in effect compete for the same opening. These designs are often called *weeping sieve tray scrubbers*. The liquid drains through the holes, thus the term weeping. These are sometimes called counterflow or dual flow trays because the gas and liquid pass counterflow through the same opening. Multiple trays can be used in one vessel, thereby repeating the fluidized zones until the proper number of transfer units are achieved. The liquid is generally introduced free flow either through low-pressure headers (with or without spray nozzles) or a weir arrangement similar to an impingement tray scrubber.

As attempts were made to increase the gas velocity through weeping sieve trays, one gets to the point where the gas can pass upward through

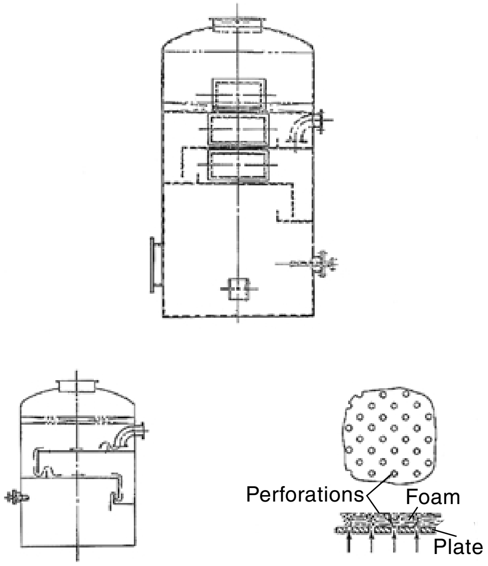

***Figure 10.2*** Impingement tray scrubber.

the opening, but the liquid cannot drain. This is called *flooding*, and the speed at which it occurs is called the *flooding velocity*. Experience has shown that just before flooding, mass transfer is at its greatest. Gas velocities in excess of flooding, however, usually cause a drop in performance and adverse conditions such as surging and dumping. *Dumping* is a condition where the inventory of liquid above the tray or grid periodically dumps out of the ebulating zone.

Weeping sieve tray scrubber designers over time increased the tray hole size to allow smoother operation near flooding but a point was reached where the hole opening was excessively large and did not afford adequate liquid coverage. Blowholes could occur where uncontacted gases could pass up through the tray/grid opening thereby reducing efficiency.

In 1984, a U.S. patent was issued to an ebulating bed scrubber design that uses a grid mesh so open that it lacked structural strength and sagged (curved grid scrubber). The curved grid was shaped like the catenary shape of a hanging telephone. Figure 10.3 shows the patent drawing from this invention.

The design basis addressed the fact that as a gas rises axially and vertically up a tower, it forms a velocity pressure profile. The velocity pressure profile represents the kinetic energy at any point on the curve (as opposed to the gas volumetric flow rate). The curvature of the grid used is the mirror image of this velocity pressure profile. It allows, therefore, a greater depth of liquid to form where the velocity pressure is the greatest thereby making

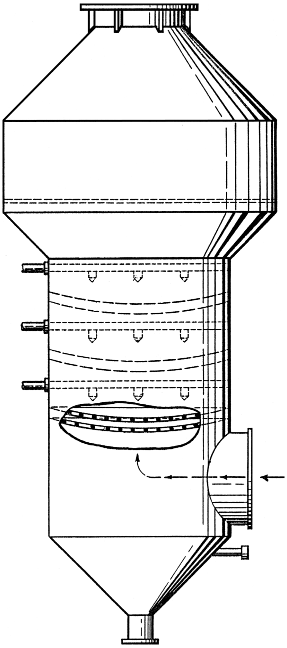

***Figure 10.3*** Ebulating bed scrubber (U.S. Patent Office, U.S. Patent 4,432,914).

the application of kinetic energy more uniform and efficient across the diameter of the vessel. When liquid is dispersed above this grid, an ebulating zone is created. The zone increases in depth until the given gas velocity cannot support it any further. The liquid then starts to drain through the grid. The grid is uniform along its surface and the gas has no preferred or directed path. These designs were sold under license by ChemPro (Fairfield, NJ), the Otto H. York Company (Parsippany, NJ), and others.

It became evident on some of these installations the random bubbling of the bed was *too* random for optimum operation. Much like an overheated pot of boiling water, jets could erupt unexpectedly and spill over, causing upsets and reduced efficiency.

In 1999, a U.S. patent was issued on a fluidized bed scrubber device that both eliminated the media of the mobile media type and created a stabilized swirling rather than ebulating bed. This device is called the *ROTABED™ scrubber*. It is marketed by Bionomic Industries. This design harnesses the Coriolis effect to create a stabilized, slowly rotating fluidized ebulating bed. A special swirl inducer and vortex finder as seen in Figure 10.4 were developed to create this desired action. The swirl inducer also provides structural support for the grid, a function totally lacking curved grid designs. The special vortex finder was developed to provide a swirl pivot point about which the draining bed could pivot.

The gyroscopic stabilizing effect is much like that of a spinning top. Give a top a spin, and its angular momentum helps stabilize its rotation. Give the fluidized bed a spin and make it pivot about an axis, and greater

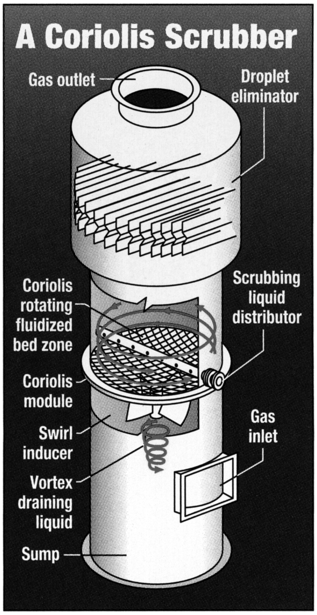

***Figure 10.4*** ROTABED scrubber (Bionomic Industries Inc.).

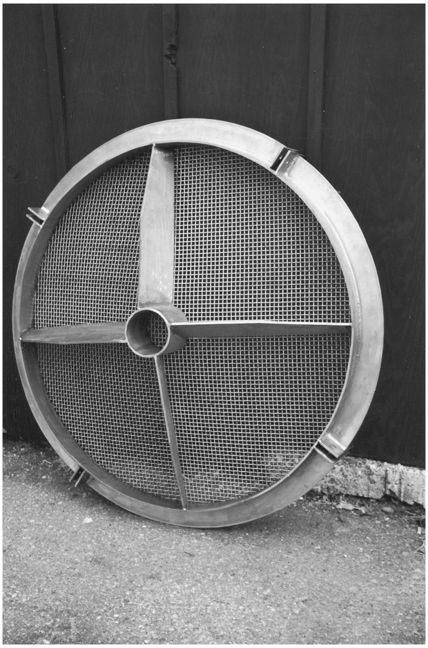

*Figure 10.5* ROTABED grid (Bionomic Industries Inc.).

stability is achieved. This free energy caused by the rotation of the Earth helps impart a slow spin to the fluidized bed essentially without additional energy input. The swirl vanes are designed to get the rotation going and to help make the liquid draining more uniform. A slow swirling is desired, not a rapid one, otherwise the liquid would be thrown to the vessel wall and become ineffective for mass transfer by reducing its surface area.

Rather than use the axial velocity pressure profile, the ROTABED scrubber creates a corkscrew type gas pattern through the fluidized bed. This helical pattern increases the path length of the gas with the liquid thereby improving mass transfer. Figure 10.5 shows a typical ROTABED grid complete with vortex finder (center) and the small vanes that impart the rotation. North of the equator, the vane pitch creates a counterclockwise rotation and south of the equator a clockwise rotation is imparted.

Fluidized bed scrubbers often use very simple liquid injection headers such as those shown in Figure 10.6. The view is looking down toward the grid, with the vessel on its side. Note that the headers are flanged bayonet type, which can be retracted from the vessel. These headers are actually submerged in the scrubbing liquid during operation so the turbulent action of the liquid surrounding the headers helps keep them clean. The headers typically use low velocity horizontal holes for liquid injection therefore their back pressure, that is, pumping pressure, is inherently low (less than 5 psig). No spray nozzles (that could plug) are used.

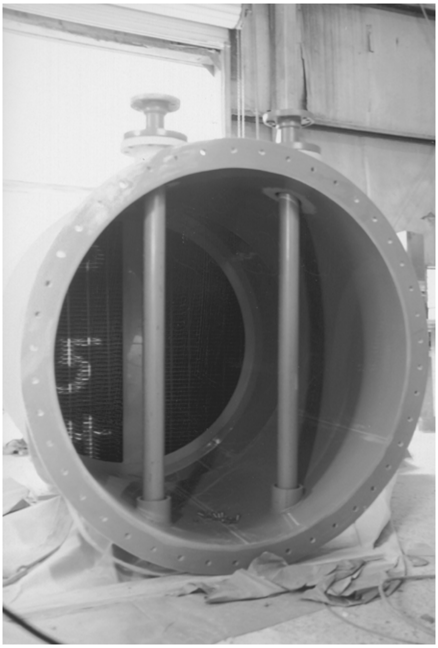

*Figure 10.6* Header arrangement (Bionomic Industries Inc.).

## *Primary mechanisms used*

These designs use the gas absorption principles described in Chapter 1 and elsewhere.

Typical number of transfer units (NTUs) available vary from 0.5 NTU/stage to approximately 2 NTUs/stage, depending on the application. The lower the solubility of the pollutant gas, the lower the NTU available. These designs rely on the rapid absorption of the gas followed by a rapid reaction of the gas with chemicals in the liquid.

For particulate capture, the primary capture mechanism is impaction. Particulate above 10 μm aerodynamic diameter can be removed at 80 to 95% efficiency. There is a rapid dropoff in particulate removal efficiency below 5 μm diameter because these scrubbers are intentionally operated at low pressure drop (usually under 6 inches water column [w.c.]). As a gas cooler, the highly agitated bed creates shorter gas to droplet path lengths and affords superior application of diffusion and phoretic forces.

## *Design basics*

Typical gas inlet velocities are 45 to 55 ft/sec. Vessel velocities vary from approximately 8 to 10 ft/sec for the mobile bed scrubber design to 18 to 30 ft/sec for the ROTABED scrubber design. At the droplet removal stage, the gas velocity is reduced to 10 to 12 ft/sec to accommodate a chevron or spin vane droplet eliminator. If a mesh pad is used, the gas velocity is decreased to 8 to 10 ft/sec. Gas outlet velocities are the same as the inlet if the cleaned gases proceed to downstream equipment (such as a fan). If a stack is mounted on top of the scrubber, gas velocities of 35 to 40 ft/sec are common.

Liquid header speeds are usually 2 to 6 ft/sec velocity with header pressures of under 3 to 5 psig. Some designs permit the use of liquid headers at each stage thereby allowing the adjustment of the scrubber chemistry within the scrubber at each stage.

Pressure drops range from approximately 0.5 inches w.c. per tray/grid to over 6 inches w.c. per grid, depending on the fluidized bed depth. Typical pressure drops are 1 to 2 inches w.c. per grid or tray stage, with mobile bed scrubbers demonstrating slightly higher pressure drops.

Mobile bed scrubbers can use mesh pads, chevrons, or packed sections for droplet control. In the curved grid scrubber, which operates at a higher vessel velocity, droplet control is most often by chevron; therefore, these vessels are usually greater in diameter at the top (chevron requires a lower face velocity) than where the grids are located. The ROTABED scrubber has been installed with chevrons in the expanded diameter upper stage or in a cross-flow chevron type droplet eliminator mounted after the scrubber.

Maintenance is typically very low for these designs. The attrition rate on the mobile media varies by application. The materials of construction of the mobile media are usually limited to thermoplastics. The designs devoid of internal media are suggested where overheating or erosive type particulate is present.

Vessels may be made of any suitable formable material. Grid/trays can be made in any material that can be perforated or drawn into structurally sound wire.

## *Operating suggestions*

Fluidized bed scrubbers are best used where plugging resistance is of paramount importance in a gas absorption application. Although less effective for particulate control, they can be used to remove large (10 μm) particulate and where the inlet loading of particulate is less than 5 to 10 grs/dscf. If the particulate is difficult to wet (example: certain clays and powders), it is best to prescrub the gas using a device specifically designed for particulate control such as a Venturi scrubber.

The liquid headers in fluidized bed scrubbers often are low-pressure designs with port (hole) openings rather than spray nozzles. These header holes are typically in excess of $^1/_2$ inch in diameter and represent the smallest opening through which any solid must pass. If solids are expected to agglomerate in the liquid circuit, these header openings can often be enlarged.

With most designs, it is imperative that these headers eject the scrubbing liquid horizontally rather than vertically. Fluidized bed scrubbers are essentially energy balances between the gas kinetic energy and that of the liquid. If one sprays the liquid downward, excessive energy can be imparted to the liquid, making it more difficult to fluidize. If the liquid is injected horizontally, the weight of the liquid is its principal vertical energy component and fluidization is much easier to accomplish.

Because this energy balance exists, the liquid flow must be initiated before the gas flow. Fluidized bed scrubbers are noted for their very low dry, that is, no liquid, pressure drop. Take away the liquid and one takes away much of the flow resistance. If a fan is used, loss of liquid can cause the fan to be unloaded and run out on its fan curve producing excessive gas flow. This gas flow can sometimes overwhelm the droplet eliminator, leading to entrainment.

Many fluidized bed type scrubbers therefore have interlocks in the control circuit that require the addition of the liquid first, then permit the fan to start. If the liquid is lost during operation (given a pump failure etc.), the fan is momentarily stopped and the pump is restarted. This allows the gas velocity to fall below the fluidization speed and keeps the gas flow within the range of the droplet eliminator.

Still others use a gas reflux system that pulls gas back from the stack to the scrubber or fan inlet (if the fan is located ahead of the scrubber). A modulating opposed blade damper in this line modulates based on scrubber pressure drop or source draft, automatically keeping the scrubber within design gas flow range. These type systems can control draft sensitive sources to within a few hundredths of an inch of water draft.

The inherent mixing action in a fluidized bed scrubber can simplify chemical addition. Although chemical is often added in the recirculation pump inlet for mixing, these types of scrubbers often use direct injection of chemical into the scrubber headers or even into the fluidized zone itself.

Usually, about one third of the recirculated scrubbing liquid is held up in this scrubber's contact zone. When the scrubber shuts down and airflow ceases, this liquid will fall; therefore, the scrubber sumps must be designed for adequate freeboard if overflow upon shutdown cannot be tolerated.

# chapter 11

# Mechanically aided scrubbers

## Device type

Mechanically aided scrubbers are defined as devices that use a moving mechanism in the gas stream to achieve the desired particulate, or contaminant gas removal.

Mechanically aided scrubbers are generally used for dust control involving particulate larger than approximately 10 μm diameter and at low loadings (below 5 grs/dscf). They have been used to control dusts from loading and unloading facilities, fugitive dusts from storage facilities, wet coating operations, and numerous other applications. They were particularly popular in the 1970s in the mining industry for dust control where a wet product was required and are still used for that purpose. They are noted for their low cost, compact size, and reliability. Ever tightening codes have shifted the focus to low- to medium-energy Venturi scrubbers on many applications that had been dominated by mechanically aided designs.

## Typical applications and uses

These designs are used to control high dust loadings of relatively large dust where it is desirable to recover the dust wet. Controlling dust from conveyors, blenders, mullers, mills and other high dust loading sources are areas with this type scrubber has been used. In these applications, the dust is usually returned to the process as wet slurry or is separated in a pond or clarifier.

They are effective on particles 10 μm or larger. They are not used as much where the particulate is hygroscopic and may build up on the scrubber inlet. Similarly, they are not used for gas absorption, although they may be used ahead of a gas absorption device (such as a packed tower).

Their compact size and low cost make them attractive, where codes allow, for general dust control applications.

## *Operating principles*

As was mentioned previously, it is believed that a given amount of energy input into a gas cleaning device is required to achieve a given amount of pollutant removal (the equivalent energy theory). This energy may be introduced through the use of the gas velocity (produced by a fan or other prime mover), through a pump or other means or pressurizing liquid, or by a moving mechanical device.

The most common moving mechanism used in mechanically aided scrubbers is a rotating fan wheel or modified fan wheel. The wheel is usually sprayed with scrubbing solution and the liquid is shattered into the desired droplets. Locally, very high relative velocities exist between the gas and the liquid so that impaction is enhanced. These designs basically include the fan with the scrubber so no additional fan is needed.

Two very popular mechanically aided scrubbers are the American Air Filter (AAF) W RotoClone series and the Ducon UW-4 arrangement. These both use sprayed wheel type contacting stages but approach the problem differently.

Figure 11.1 shows the AAF RotoClone unit. The Roto comes from the specially designed rotating element and the Clone comes from the cyclone type separation that was used. In this design, the gas stream usually is ingested into the rotating wheel where high local velocities and centrifugal force were applied, along with scrubbing liquid, to impact the particulate into the droplets. The scroll-shaped housing served to separate droplets from the gas stream. The type N RotoClone is used for higher efficiency dust control.

Please note the drag chain conveyor (extending off to the left) that is an integral part of the sump. This drag chain allows the continuous or periodic removal of settleable solids from the scrubber. This makes for a very compact arrangement.

***Figure 11.1*** AAF RotoClone type N (American Air Filter).

*Figure 11.2* Type W RotoClone (American Air Filter).

Another variant is the type W RotoClone. Shown in Figure 11.2, the type W provides for direct injection into the specially designed fan wheel. In this particular model, the motor (seen at the right) is providing power to the wheel via a V-belt drive.

The Ducon UW-4 type scrubber uses a primary cyclonic separation stage followed by a wetted fan, followed by another cyclonic separation stage. The primary cyclonic zone is used to centrifugally separate large particulate and droplets, and thereby reduce the loading to the wetted fan. The wetted fan was sometimes preceded by a spray duct to add to the droplet loading and liquid/gas surface area before the wetted fan. The wetted fan could be equipped with sprays both at the fan eye and in the housing to help keep the wheel clean. The spray regime leaves the wetted fan discharge and is separated in a cyclonic separator. The captured liquid is returned through a trap to the primary separation stage, or is diverted out of the vessel to a separate drain.

There are modified versions of the UW-4 type scrubber supplied by a variety of vendors. There were literally thousands of these scrubbers sold; some are running to this day.

An interesting mechanically aided design is the T-Thermal Hydrop® scrubber. Shown diagrammatically in Figure 11.3, the gas stream enters through a wetted approach section (at the top) and proceeds to a special inlet duct that discharges into the rotating wheel section of the device where the stream is subjected to centrifugal and shear forces, causing the particulate to be combined with the injected liquid. A cyclonic separator is used to separate the droplets from the liquid stream.

Other mechanically aided designs have been the subject of experimentation including those using sonic pulses, microwaves, vibrating elements, or combinations thereof. In each case, some external force other than simply fan velocity or pump pressure supplements the total energy input.

The following mechanically aided rotary scrubber supplied by Trema uses tangential gas inlets to provide prescrubbing. They can be seen near the base of the unit.

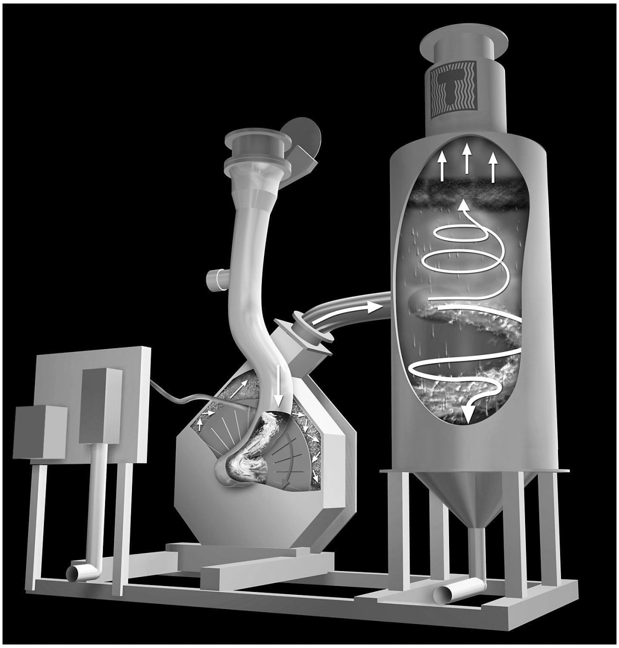

*Figure 11.3* Hydrop scrubber (T-Thermal Company).

*Figure 11.4* Rotary scrubber (Trema Verfahrenstechnik GmbH).

## Primary mechanisms used

The primary particulate capture mechanism in these devices is thought to be impaction, given the high relative velocities between the gas and liquid. Interception could also play an important role in mechanically aided scrubbers.

Because the agitation is only sustained in the confined zone at or near the moving element, diffusion is not a likely capture mechanism. Diffusion is seen more often in designs that create a spray and sustain that high surface area spray for an extended time. Likewise, many of these devices use centrifugal force applied very close to the moving element to separate the gas and liquid, therefore gas absorption is somewhat limited as the liquid surface area per unit volume is decreased during this separation.

## Design basics

Most mechanically aided scrubbers are proprietary designs that have been refined over the past few decades.

In general, the gas inlets and outlets are sized based on the conveying velocities these devices need to successfully control dust at high loadings. Gas inlet velocities in the 45 to 60 ft/sec are not uncommon. The ducting to the moving device must be carefully designed to load the scrubber uniformly. Obviously, imbalance can be a problem with any moving device; therefore, the designers take care to allow uniform loading and to clean surfaces upon which dust may build.

The total horsepower input of these devices typically includes the energy required to move the gas, the liquid, and the dust. Also, a pump or source of pressurized liquid is needed.

## Operating suggestions

The vendors of these devices have accumulated a wealth of experience in a wide variety of applications. It is best to contact them regarding specific requirements.

Because many of these designs use spray nozzles at some point, the use of a solids separation device (strainer) is often required but not a standard part of the scope of equipment supply. The drag chain shown in Figure 11.1 helps remove large solids before they reach an injurious concentration level. In addition, external strainers or liquid cyclones are sometimes suggested to remove the captured particulate.

Given their simple designs, mechanically aided scrubbers often use a simple wire type overflow for level control. Open impeller pumps are often seen on these designs given their use on generally high solids applications. Spare pump wetted parts such as impellers, seals, shafts, and shaft sleeves are recommended.

Because the moving element is often sprayed, vibration detection devices and amperage meters can be used to monitor that important element.

Increases in fan amperage can offer a warning of wheel solids buildup. A differential pressure gauge is often used to monitor the scrubber pressure drop. In keeping with the simplicity of the design, little if any additional instrumentation is used.

When the scrubbers are shut down for inspection or service, particular attention should be paid to corrosion or wear on the rotating element. Firms that use multiple mechanically aided scrubbers (such as foundries for sand dust separation) often have spare rotating elements on hand.

## chapter 12

# Packed towers

## Device type

Packed towers are gas absorption devices that utilize internal media of a variety of types to enhance the mass transfer of gases into an absorbing liquid. Please also see filament/mesh scrubbers, which share many of the same design and use characteristics of the packed tower.

## Typical applications and uses

For both air pollution control and recovery of process gases, packed towers are one of the most common mass transfer devices in current use.

They are used for control of soluble gases such as halide acids (such as HF and HCl), and to remove soluble organic compounds such as alcohols and aldehydes. When the scrubbing solution is charged with an oxidant such as sodium hypochlorite, they are used to control sulfide odors from wastewater treatment facilities and rendering plants. They are used to absorb and concentrate acids for recovery. When gases and aerosols are both present, the packed tower is frequently used ahead of aerosol collectors such as fiberbeds and wet electrostatic precipitators (WESPs).

Packed towers are also used as gas coolers and condensers. They sometimes are used after a hot gas quencher to act as a gas cooler. Some are fitted with ceramic packing that can resist temperature extremes. When fitted ahead of a Venturi scrubber to function as a water vapor condenser/absorber, the packed tower becomes a critical part of a flux force condensation system for particulate control. The tower in this case acts as both an acid gas absorber and a direct contact vapor condenser.

They are also used after Venturi scrubbers on medical waste incinerators to control acid gases such as HCl.

To control the combined vent gases from semiconductor manufacturing, large packed towers are used. Called house scrubbers, they clean the small concentrations of acid gases usually using pH control and neutralization with caustic. In contrast, the same industry uses small packed towers at specific tools in a point of use configuration. The point of use scrubbers are designed to treat the specific emissions source and often vent into a combined ventilation system, eventually leading to a house scrubber. The emissions are effectively double scrubbed before the carrying gas is released to atmosphere.

Pulp and paper mills often use packed towers for bleach plant applications to control chlorine and chlorine dioxide where fibers or chemical scaling is minimal. Fluidized bed type scrubbers are used in cases where fibers or scaling are known challenges.

## *Operating principles*

As mentioned in Chapter 1, absorbers function by extending the surface of a solvent (usually water) so that the mass transfer of a gas into that solvent is enhanced. The mass transfer of a gas into the liquid is limited by the gas/liquid interface conditions. Only a certain mass of gas can move into the liquid per unit *area*. Once into the liquid, only a certain amount of dissolved gas can remain, per unit *volume*. Therefore, to effectively remove the gas, one must have sufficient liquid surface area and an adequate volume of liquid.

The packing (or media) in a packed tower provides the liquid-extending function to increase its area. The liquid inlet system provides the adequate volume. By selecting the proper type and amount of media, the conditions can be created for optimum mass transfer. The result is a tower containing the design amount of media (or an excess) irrigated by the design amount of liquid (or an excess). If the gas flows vertically, the tower may contain just a few feet of this media, or over 50 feet of media, depending upon the absorption characteristics of the contaminant and the neutralizing capability of the liquid. Towers may also be required in series to reach the desired gas outlet conditions.

Packed towers are essentially probability machines. The individual contaminant gas molecule is only in contact with the descending liquid for a fraction of a second. By increasing the number of chance such random contacts through increasing the height of the packed bed, the chances that the molecule will be absorbed is increased. If you do not absorb it now, you might absorb it later. Also, it takes time for the gas to diffuse to the liquid surface. If one gives such diffusion more time by letting the gas move slowly through a long contact bed, one increases the chance of successful absorption.

The standard vertical (counterflow) packed tower has the components shown in Figure 12.1. The vessel contains a grid that supports the packing media. The media is irrigated from above by a liquid distribution device (usually a spray header or headers). The liquid hits the media and high surface area liquid films and/or drip points are formed as the liquid flows over and through the media. The gas, flowing in the opposite direction as the liquid, is caused to take a tortuous path through the media thus bringing the gas close to the absorbing liquid. The gas contacts the liquid surface and, if the liquid is not saturated with the contaminant, is absorbed. If

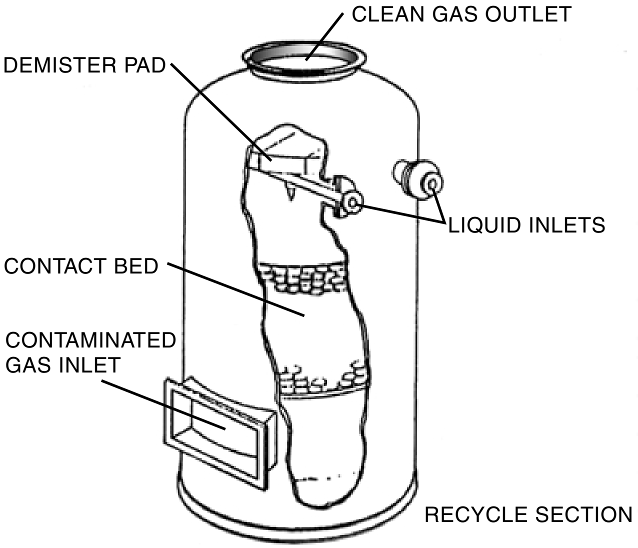

*Figure 12.1* Vertical counterflow packed tower components (Bionomic Industries Inc.).

some contaminant is already present in the liquid, not all of the contaminant gas will be absorbed. Therefore, a large volume of packing is often used so that, particularly at the top of the packed tower, the scrubbing liquid can absorb and retain the gas. If not, the removal efficiency of the packed tower will be reduced.

A cross-flow arrangement (Figure 12.2) is similar except that some of the gas and liquid move concurrently and that the liquid is rejected downward along the entire vessel path length. For gases that are absorbed and react with dissolved compounds, the cross-flow and counter-flow towers

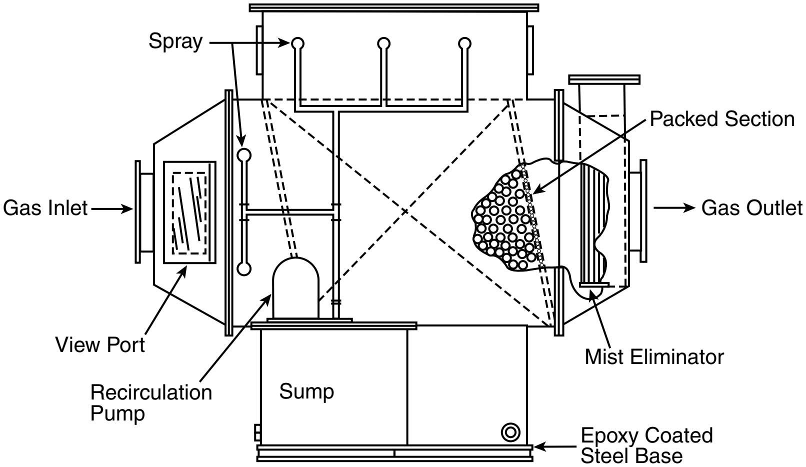

*Figure 12.2* Crossflow packed tower components (Bionomic Industries Inc.).

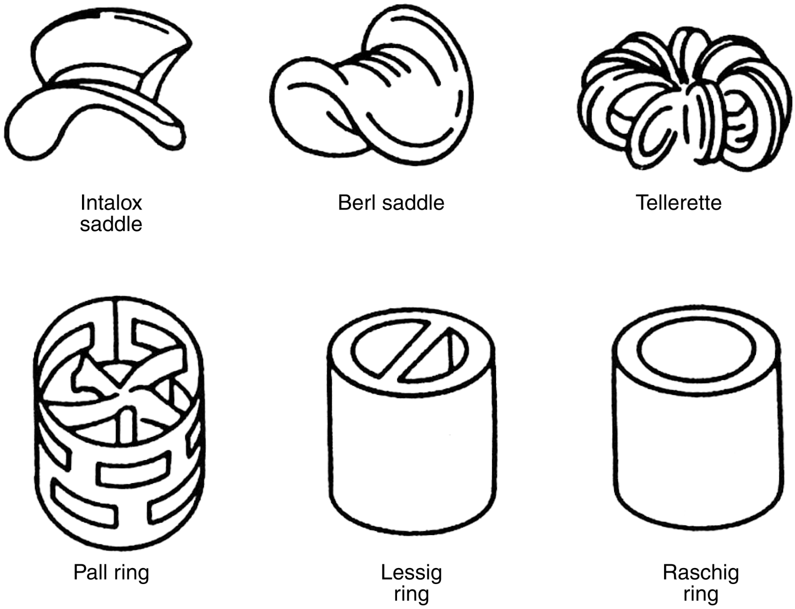

Intalox saddle

Berl saddle

Tellerette

Pall ring

Lessig ring

Raschig ring

*Figure 12.3* Dumped type packing media (Bionomic Industries Inc.).

behave similarly. If the gas does not react with chemicals in the liquid, the cross-flow tower can demonstrate a reduced efficiency since the liquid is carried, with its dissolved gas cargo, toward the gas discharge point, creating a vapor pressure condition that favors the gas. This means that the liquid may not have the same absorption capacity in the cross-flow design as in the counter-flow design when no liquid phase reaction occurs.

There are hundreds of types of packed tower packing material that forms the packed bed. Figure 12.3 shows a variety of basic types of dumped type packing media. This media may be made from thermoplastic material such as polypropylene, metals such as stainless steel or corrosion resistant alloys, or even in the form of cast ceramics. Figure 12.4 shows media offered by Rauschert and Figure 12.5 shows media designed and supplied by Lantec Products, two of the leading domestic suppliers of this type media.

You can see by the designs that certain configurations produce large surface films and others have small holes or openings that form numerous drip points. In general, where scaling can occur, packing with large openings that produce drip passages rather than film surfaces are used because scaling is a surface phenomenon. The various vendors seek to combine a balance between mass transfer enhancement and plugging and scaling resistance. The resulting packing must be structurally sound as well because the material rests on and is supported by the media beneath it. In a more subtle manner, the packing must resist side-to-side motion under the influence of gas or liquid flow. If the packing moves around easily, valleys or mounds of packing can form in the tower, upsetting its performance.

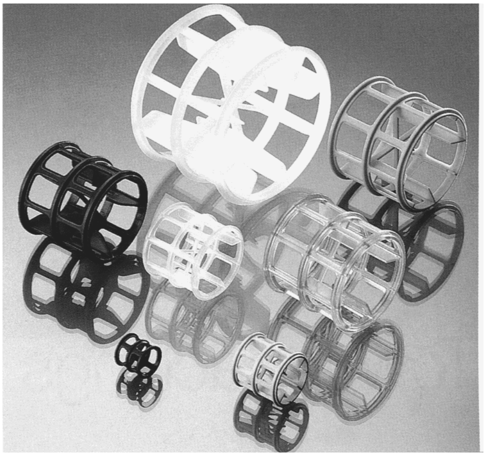

***Figure 12.4*** Rauschert packed tower hiflow media (Rauschert Industries, Inc.).

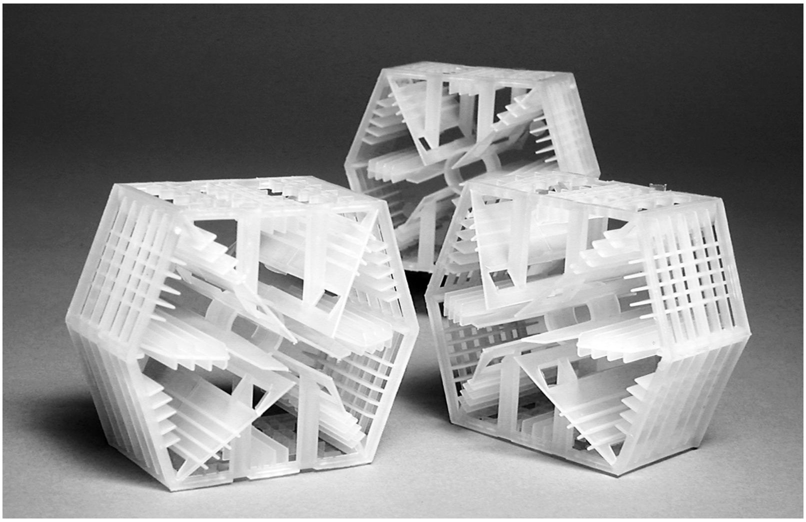

***Figure 12.5*** Lantec packed tower media (Lantec Products, Inc.).

Media can also be in the form of shaped and/or perforated panels. This is called *structured packing* because the media is structurally self-supporting. Figure 12.6 shows a type of structural packing. The plastic versions are cousins to cooling tower fill and many look like corrugated plastic panels. Other fill material is made of woven mesh, much like the mesh used in a mesh pad droplet eliminator. This type media is used in distillation columns and applications, in general, where no solids are present. If solids are present, the media can act as a liquid filter and plug.

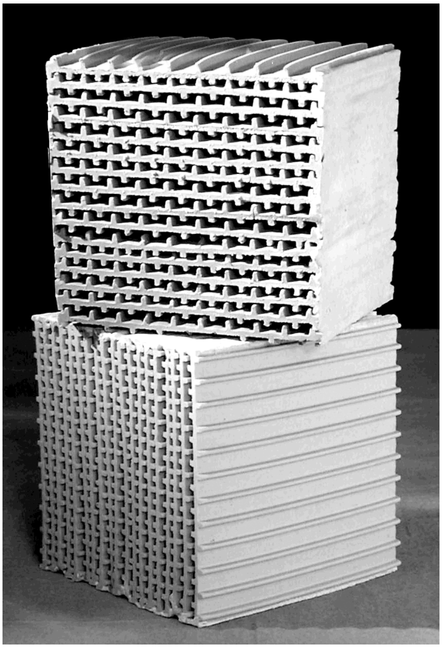

*Figure 12.6* Structured ceramic packing (Lantec Products, Inc.).

## *Primary mechanisms used*

Gas absorption in a counterflow (vertical gas flow) packed tower is dictated by the equilibrium conditions between the contaminant gas and the absorbing liquid. The overall controlling mechanisms are ruled by the solubility of the gas in the liquid and by any reactions that may be caused to occur in the liquid with a reacting chemical. If the gas reacts with a chemical forming a lower vapor pressure compound, the equilibrium shift favors further absorption. If the absorbed gas builds up in the liquid, the equilibrium shifts to inhibit subsequent absorption.

Diffusion is used to move the gas to the liquid surface. At or near the liquid surface, phoretic forces such as thermophoresis or diffusiophoresis may be in play.

In essence, however, packed towers are equilibrium and probability machines. The overall gas/liquid equilibrium controls the design of the tower. Because the gas is absorbed at the liquid surface, the more liquid to gas interactions that can be caused to occur, the greater the probability of absorption. The more difficult the absorption, therefore the greater the media depth. This increases the number of contact possibilities thus increasing the likelihood that a contact will be successful and the gas will be absorbed.

## *Design basics*

The contaminant solubility, vapor pressure characteristics, and the scrubbing liquid's capacity for that contaminant control the actual amount of packing needed in a packed tower. Packing selection is covered in detail in books specifically devoted to mass transfer (see suggested reading) and is beyond the scope of this book.

A method has been developed to compare various packing types. This parameter is called the packing factor and you will see specific packing factors published for various packing types. Most packing vendors, however, will provide for you the estimated packing quantity for their specific packing after you submit the gas flow and scrubbing liquid characteristics to them. Some will even design towers for you. It is advised, however, that you solicit the assistance of an experienced packed tower vendor before committing to a tower selection. These devices are more complicated than they appear to be on the surface.

## *Counter flow*

Gas inlet velocities are usually 40 to 55 ft/sec in packed towers. The inlet velocity is usually dictated by common ventilation system design practice. In vertical counterflow tower designs, the vessel gas velocity is 3 to 8 ft/sec. The upper limit is dictated by the flooding characteristics of the packing.

Any packing can flood. Flooding occurs when the gas kinetic energy is sufficient to hold up all of the scrubbing liquid. The liquid spreads out across the tower seeking some means to drain but cannot. The pressure drop of the tower starts to swing or surge and the hydraulics become unstable. For most gas absorption problems at near ambient conditions, at approximately 8 ft/sec, the tower might flood. Packing vendors perform tests on their packing and determine flooding velocities and gas mass flow rates for their various packing types. The designer sizes the vessel to stay below that flooding point.

Ironically, most mass transfer operations reach their peak efficiency just before flooding occurs. Mechanically, however, the stability of the tower decreases as one approaches flooding. A compromise is needed. Most towers are designed for less than 80% of predicted flooding.

To support the packing, flat or curved injection type grids are used. Figure 12.7 is a rendering of an injection type grid. The curved surfaces allow the ascending gas to be injected into the packing not on one plane but over a deep zone. The gas can enter the packing at an angle thereby allowing the liquid to more readily drain.

If dumped type packing is used, hold-down grids are often used to hold the packing within the required absorption zone.

The liquid itself is distributed by spray headers as shown in Figure 12.8 or by distribution weirs as shown in Figure 12.9. Care is taken with spray type distributors to make certain that the spray patterns overlap, but don't

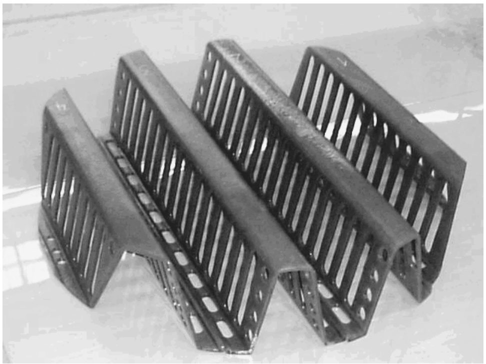

*Figure 12.7* Injection type packing support (Rauschert Industries, Inc.).

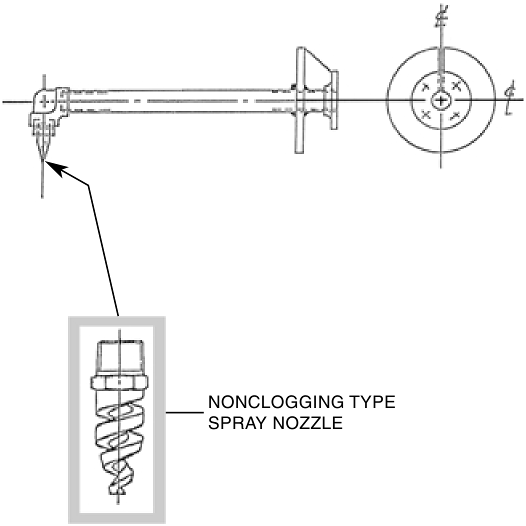

*Figure 12.8* Retractable liquid distribution headers (Bionomic Industries Inc.).

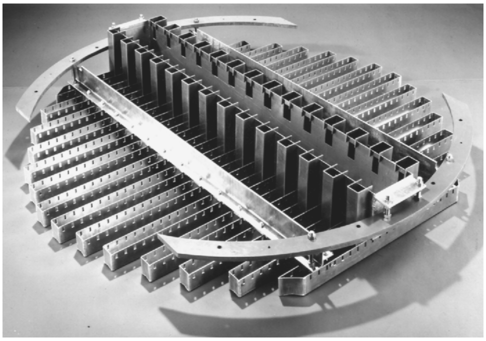

*Figure 12.9* Liquid distribution weir boxes (Rauschert Industries, Inc.).

impact the vessel wall excessively. If the liquid hits the wall, it forms sheets of liquid on the wall that are largely ineffective in absorption because it only attains the area of the vessel wall itself. Many packed tower internals vendors offer proprietary liquid distributors. These designs often have their roots in distillation towers and are highly engineered (and tested) to produce a uniform liquid loading. If spray headers are used, the liquid velocity is 4 to 8 ft/sec. Free flow fittings to distributor trays are in the 3 to 4 ft/sec range, sometimes lower.

Packing is usually irrigated at a minimum of about 6 to 8 gpm of liquid per square foot of packing. It is not unusual to irrigate at over 20 gpm per square foot to make certain that all of the packing is wetted. If the packing is not fully wetted, the performance of the scrubber will be reduced.

If a packing depth of more than about 10 feet is required, redistributors or rosettes are used to pull liquid from the wall toward the center. The gas velocity through the packing causes the pushing of the liquid toward the wall. The velocity tends to be slightly higher at the center than the wall; thus, the liquid is ejected toward the wall. The rosettes act as baffles to direct the liquid back toward the vessel center thereby keeping all of the packing wetted.

The upper surface of the packing and its liquid distributor generate residual droplets that are controlled by a mist eliminator. Mesh pads are often used when the gas stream is clean (no solids) or chevrons when some particulate may be present. Mesh pads require a gas velocity of about 10 ft/sec or less. Chevrons permit higher gas velocity (10–12 ft/sec) but this would require a change in vessel diameter. As a result, the packed tower vessel is usually designed for about 8 ft/sec or less. If a chevron is used, its face area is reduced using a blank-off plate.

### *Cross flow*

Gas inlet velocities are in accordance with the counterflow designs. Because the gas flows side to side in the crossflow design, the liquid is draining out of the gas stream so the packing resists flooding. As a result, one can run at higher gas velocities.

The box velocity is usually 5 to 10 ft/sec. The liquid loading can be higher than that used in the counter-flow packed tower. This higher liquid capacity can be an advantage where the gas is only slightly soluble in water (you can use more water).

The droplet eliminator in the cross flow also rejects liquid out of the air stream, but it ejects it out and down, rather than back into the gas stream. If a chevron is chosen, it can operate at 12 to 15 ft/sec. If a mesh pad is used, velocities of 8 to 12 ft/sec and sometimes higher are possible. The mesh pads are often inclined to enhance draining along its element (the gas drains at an angle given the gas velocity pushing the liquid to the side). Either of these devices is often mounted in a containing box with a flanged service cover.

With crossflow designs, a reduction in efficiency can occur if the gas short-circuits over the top of the packing. To prevent this, vendors use baffles or extend the packing up into the box area above the packing. Others place a layer of mesh pad above the packing to offer greater resistance to gas flow. Still others use two or three different size packing so that the gas is pushed lower in the tower. The more resistant packing is placed at the top, near the irrigation headers.

The liquid is distributed much like in a counterflow packed tower at similar velocities. The liquid header pressure need not be very high since the liquid nozzles are within a foot or so of the packing. Pressures of less than 10 psig are used firing full cone nozzles. Some designs use pipes with holes in them, thereby eliminating the nozzles.

## *Operating suggestions*

Packed towers, particularly vertical gas flow types, need to be installed vertically. A plum line is often used to help set the verticality of the unit.

If the tower is made from fiberglass reinforced plastic (FRP) and is installed on a concrete pad, roofing felt (tar paper) is placed under the tower to compensate for pad irregularities. If the towers are installed on steel plates, roofing felt is also used to allow the plastic packed tower to expand and contract with minimum chaffing on the plate.

Always plan the surrounding area for packing removal and installation. Sometimes height constraints eliminate the possibility of using access doors above and below the packed bed. In this case, the whole top of the tower may have to be flanged and bolted for removal.

On towers equipped with liquid headers, to access the nozzles, retractable, flanged headers are suggested. If these headers are plastic and are less than 3 ft long, they can be cantilevered. If they are longer, they typically need to be extended fully across the tower diameter and be retained in a socket or similar support. Reason? When the header is pressurized, the reaction force of the liquid ejecting from the nozzle tends to push the header upward. When unpressurized, the header tends to sag. The end support reduces both effects.

If caustic is used in packed towers, it should be thoroughly mixed. One way to do this is to inject it into the liquid recirculation circuit ahead of an inline mixer. Another way is to take part of the recycle liquid and divert it into a submerged sparger located in the scrubber sump. The caustic is injected into this sparger and is thoroughly mixed in the sump.

Using a differential pressure gauge or transmitter monitoring the bed pressure drop can reveal the condition of the packed tower. All things being equal, if the pressure drop rises, the bed may be plugging.

Acid washing a scaled-up packed bed can be difficult. It is much like trying to clean both sides of an umbrella by sending liquid down on it. You can possibly clean the upward-facing side, but what about the underside? The only truly effective method is to totally flood the tower with descaling chemical (usually acid for carbonate scale and caustic for silicate scale). The other method is to remove the packing and wash or replace it. The latter is the most common method.

Care should be taken in packed towers using spray nozzles to provide strainers to remove or trap solids that could plug the nozzles. Some vendors use removable perforated plates that trap solids. Others use single or duplex basket strainers.

Packed towers offer efficient control of soluble gases in environments in which solids plugging, either by solids in the gas stream or by products of the gas/liquid reaction, is minimal.

# chapter 13

# Settling chambers

## Device type

One of the simplest (and oldest) air pollution control devices is the *settling chamber*. These are also sometimes called *knock out boxes* or *drop out boxes*. The equipment is in the form of a large chamber, which allows reduction of the gas velocity to a point where the particulate it carries simply drops out.

Today, settling chambers are used for coarse removal of large particulate in advance of higher efficiency particulate control equipment.

They are rarely, if ever, used as the final gas cleaning device.

## Typical applications and uses

Settling chambers are primarily used to reduce the loading of particulate from sources such as kilns, calciners, and mills or grinders that inherently produce high particulate concentrations. If the particulate is valuable in a dry form, the settling chamber usually is designed to settle out the smallest size particle that can economically be separated. If the product is not valuable or further downstream particulate separation is to be used (such as a cyclone, scrubber, or fabric filter collector), the chamber is usually sized to afford some basic separation at low cost.

They are often followed by product recovery cyclones which are, in turn, followed by collectors designed for high efficiency collection of the fine particulate that pass through the upstream devices.

## Operating principles

A settling chamber operates on the principle that if you slow a gas stream down sufficiently, the solid particulate contained within that gas stream will settle out by gravity. In general, the larger the particle, the faster the settling rate. In addition, larger particles will settle out faster in a given moving gas stream than smaller particles.

The settling velocity for particulate was explored extensively in the mid-1800s by a scientist named Stokes. His equation for the terminal settling velocity of particulate is used to this day. It is called Stokes Law:

$$V_g = (D^2(d_p - d_g)g)/18v$$

Where

$V_g$ = terminal settling velocity (ft/sec)
D = particle diameter in feet
$d_p$ = density of particle, lbsm/$ft^3$
$d_g$ = density of gas, lbsm/$ft^3$
g = acceleration of gravity, ft/$sec^2$
v = gas viscosity, lbm/ft/sec

The settling relationship is only accurately applied for particles of about 2 μm and greater aerodynamic diameter. Usually, for calculations involving air at ambient conditions, the density of the gas is ignored because it is minor when compared to the particle density.

What this equation shows is that the greater the particle diameter and density, the higher the particle's settling velocity. Resisting this settling, the higher the viscosity of the gas, the lower the particle's terminal settling velocity.

Settling chambers are therefore designed to allow the mean gas stream velocity to slow down to a point at or below the target particle's settling velocity so that the particle drops out within the confines of the chamber. Because the particle settles at a given rate (i.e., distance per unit time) as predicted by Stokes Law, the chamber must be sufficiently long to allow this settling to be completed before the gas reaches the device's gas outlet. Settling chambers are therefore large in cross-sectional area (to slow the gas stream down), and long, to allow sufficient time for settling.

What about particles under approximately 2 μm diameter? Unfortunately, these particles (about $^1/_{25}$th the diameter of a human hair) are so small that they are influenced greatly by surrounding gas molecules and do not follow Stokes Law. They do not really even follow a trajectory as such. They are buoyed and buffeted by surrounding gas molecules. A correction for Stokes Law was derived by a researcher named Cunningham. Thus, we have *Cunningham's Correction Factor* for non-Stokes sized particles. Sometimes called a slip-correction factor, it is a multiplier applied to Stokes equation to adjust for the particle size and its actions below 2 μm aerodynamic diameter.

Experience has shown that settling chambers are of practical value only for reducing the loading (concentration) of large (above 100 μm aerodynamic diameter) particulate and possibly for the recovery of very large, valuable, product. They are used in various design configurations on devices such as kilns and calciners, waste solid fuel boilers, or similar devices. They are almost invariably followed by more efficient gas cleaning equipment.

Dust chambers are often used at the feed end of light weight aggregate kilns. Similar knock out chambers are used on mineral lime, cement, and lime sludge kilns and sometimes on dryers. Large particulate that is air conveyed out of the rotating portion of the kiln/dryer is encouraged to drop out in the knock out chamber and be recovered. Sometimes, a vertical baffle is used in the chamber to direct the gas stream in a pattern that makes the gas perform a 90-degree or even 180-degree turn to enhance separation. The larger particulate cannot make this turn and therefore drop out.

## *Primary mechanisms used*

The primary mechanism used is the drag force applied on the particle by the viscosity of the carrier gas. As the gas stream slows down, the influence of the viscous force of the gas on the particle is reduced and the particle begins to settle by primarily gravitational forces.

## *Design basics*

Settling chamber design is predicated on the particle size, its density, the gas viscosity and velocity, and space considerations. An infinitely large settling chamber would, in theory at least, settle out all particulate. Economics, however, limit the size of the chamber. Stokes, in turn, limits the size of the particle that can be economically separated.

If the chamber is used for valuable product recovery, the smallest particle that would be worthwhile collecting dry is the common target. The design focus then needs to answer the question, “Is there enough space?” An iterative design then follows. As mentioned earlier, Stokes Law defines the settling velocity and the velocity dictates the size of the equipment. This usually results in a design particle size in excess of 50 to 100 μm; otherwise, the chamber becomes excessively large. If the 50- to 100-μm particle is not worth collecting, the designer would size the chamber to capture much larger particles thereby at least economically lowering the loading of particles requiring further control but letting the smaller particles pass through.

Chamber (or can) velocities of 5 to 7 ft/sec or lower are common. Baffles can sometimes be used to provide beneficial changes of direction as long as the particles do not stick to the baffles. Curtains of chains can be used to in effect divert the gas flow but allow some measure of self-cleaning. Given the low gas velocity, the pressure drop is usually under 1 inch water column.

Figure 13.1 from *Fan Engineering* (Buffalo Forge, Co., New York) shows a general diagram of a crossflow settling chamber. Note the hoppers used to remove the collected solids. Gas flow is left to right. The vector diagram depicts the primary forces on the particle, which influences the trajectory and, therefore, the length of the settling chamber.

Even given a dispersion of particulate above 100 μm, the efficiency of a settling chamber is quite low. Typically only 25 to 50% of the particulate of that range or larger actually drops out. Settling chambers are often, therefore,

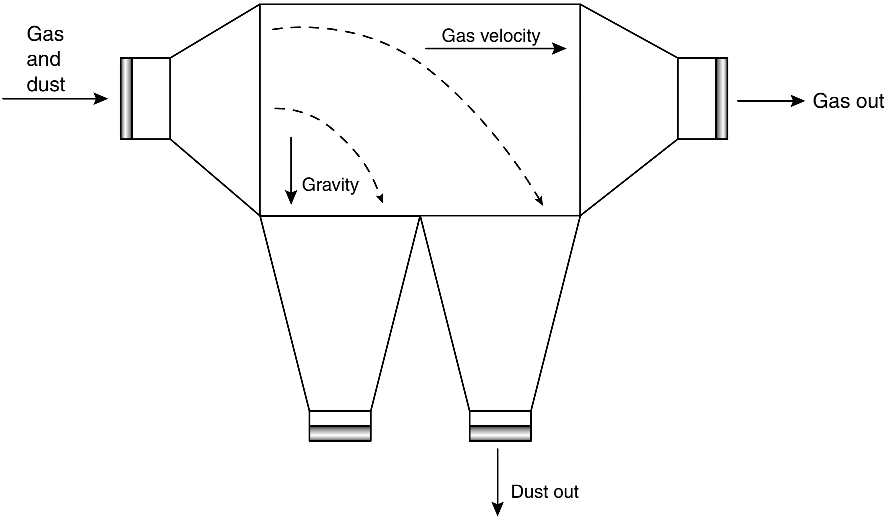

*Figure 13.1* Settling chamber.

called "rock boxes" in the industry because they only remove the "boulders." In doing so, however, they can serve a valuable purpose in reducing the total loading of particulate that must be removed by downstream devices.

## *Operating/application suggestions*

Most often, the designer of the process equipment includes a settling chamber in his design as an integral part of the device. The settling function may be just a minor one. The primary purpose may be to allow material to be fed into the device or to allow for seals, and so on to function properly. It is therefore best to use the design provided by or recommended by the process equipment vendor.

If a settling chamber is used, care should be taken to design a suitable solids discharge system so that the particulate does not build up to a point where it entrains into the gas stream. Access doors should be provided for service access and cleaning. If the gas stream contains acids and its temperature and humidity pass through the acid dewpoint, the chamber should be suitably insulated and even heated to reduce corrosive effects.

The structural support for a settling chamber should be sufficient to support the filled weight of the device. This can be a significant factor since these devices are inherently large.

Settling chambers should not be used where the particulate is sticky or can bridge or build up. In those cases, quite the opposite design is used. The ductwork is sized to be above the conveying velocity of the target particulate and that velocity is maintained until the particulate reaches a suitable gas cleaning device.

# *chapter 14*

# *Spray towers/scrubbers*

## *Device type*

Spray tower scrubbers use spray nozzles to extend the surface area of the scrubbing liquid to enhance mass transfer of contaminant gas(es) into the liquid. They are primarily used for gas absorption.

Spray scrubbers include designs that use spray nozzles (hydraulically or air or steam atomized) to absorb gases and control particulate.

## *Typical applications and uses*

Spray tower scrubbers are often used on wet flue gas desulfurization (FGD) systems at public and industrial power generation facilities. These FGD systems use lime or limestone slurries as the scrubbing liquid. Their open vessel design is an advantage where plugging or scaling may occur. The simplicity of the design makes them a lower cost alternate for high gas volume scrubbing applications (over 100,000 acfm).

They are also used as part of quenching and gas conditioning systems wherein the gas must be brought to saturation or near saturation with water.

Most spray towers are countercurrent in design wherein the gas flows vertically upward and the liquid falls downward through the ascending gases. Some units, used for odor control, are horizontally oriented using a multiplicity of concurrent spray sections in series.

Spray scrubbers cover a wider variety of designs. These vary from devices as simple as a spray header in a duct to cyclonic type devices (often called preformed spray scrubbers).

## *Operating principles*

A common characteristic of this type scrubber is the use of spray nozzles to extend the liquid surface and produce target droplets.

At least one spray zone is produced in a spray tower using at least one spray nozzle in a containing vessel. In practice, however, most spray towers

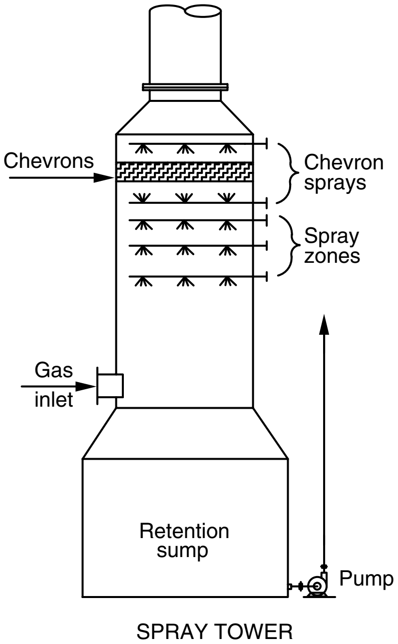

*Figure 14.1* Spray tower sectional view.

use multiple spray zones to achieve the required gas cleaning efficiency. Figure 14.1 shows a sectional view of a spray tower. The gas inlet is typically horizontally oriented into the containing vessel. A multiplicity of spray zones is used, each containing an array of nozzles. In FGD applications, these nozzles are wear-resistant designs (such as silicon carbide) since the scrubbing liquid is an abrasive slurry of lime or limestone.

The hydraulic pressure applied to the liquid acts as stored energy. When this pressurized liquid flashes from the spray nozzle, the energy stored is expended in producing a spray. The high relative velocity between the liquid and surrounding gas causes a shearing action that breaks the liquid into tiny droplets. The net effect is that the liquid surface area increased so that the contaminant gas or gases can be more readily absorbed.

After the spray is produced, the contaminant gas is absorbed through the liquid film. If a reactive chemical is contained in the droplet, the contaminant will react, forming a byproduct (usually a salt) of lower vapor pressure. Therefore, the contaminant remains in the droplet.

Most droplets fall by gravity in counter-flow designs to the sump. Quite often, the scrubber is mounted directly over the sump to facilitate this separation. A small portion of the spray goes overhead with the gas. This droplet dispersion is controlled using chevron type droplet eliminator(s) in the case of a gas stream containing particulate, or mesh pads if the gas stream is low in or devoid of particulate. The chevron droplet eliminators are often sprayed constantly from below and on timer basis from above for cleaning purposes.

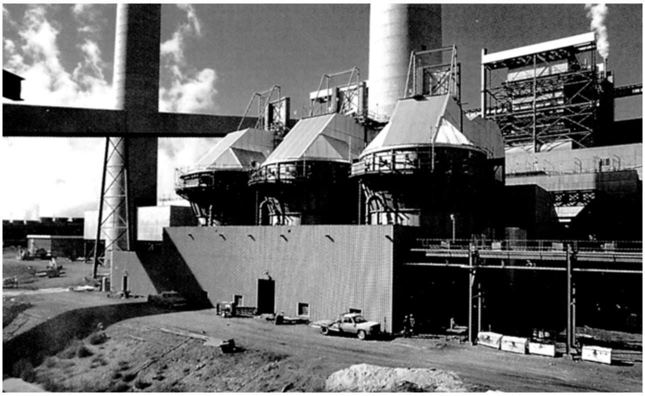

***Figure 14.2*** Utility FGD system (Babcock & Wilcox Company).

Figure 14.2 shows a common application where a utility FGD spray tower is installed after a dry precipitator used for particulate control.

With the preformed spray scrubber, the spray nozzles are generally installed in the gas inlet area of essentially a cyclonic separator. The spray dispersion is very intense and dense in the inlet zone. The gas is accelerated as the gas approaches the tangent point of the separator vessel. This action enhances particulate capture. The droplets are then spun from the gas stream using centrifugal force. Figure 14.3 shows a sketch of a preformed spray scrubber in elevation and plan view. Note how the gas inlet curves around the cylindrical separator vessel. This curved portion is called an involute and may extend from 90 to 270 degrees of vessel circumference. Note also that the sprays are mounted on individual headers on the involute for simplified access. These headers usually are connected to a distribution pipe by hoses and are isolated by valves so that individual headers may be removed for servicing.

A preformed spray scrubber was used on the superphosphate fertilizer multistage scrubber application referenced in previous chapters. It forms the base of the stack as shown in the center of Figure 14.4. It was used to remove residual fluoride compounds and to concentrate the fluosilicic acid prior to the solution being sent to the filament/mesh pad scrubber (to the left) for further concentration. The fluosilicic acid recovery tanks are to the right of the picture.

## *Primary mechanisms used*

The primary scrubbing mechanism used in a spray tower is absorption. To some extent, diffusion is in play as the contaminant gas moves towards the droplet surface. The droplets themselves can remove some particulate by impaction; however, the relative velocity between the gas and liquid is low (usually below 20–40 ft/sec), so impaction is minor.

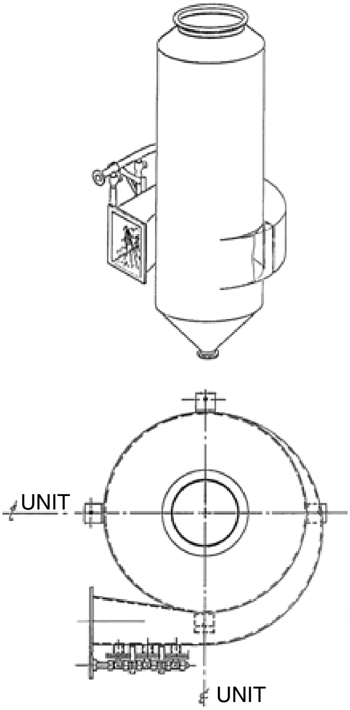

*Figure 14.3* Preformed spray scrubber (Bionomic Industries Inc.).

*Figure 14.4* Preformed spray scrubber on superphosphate dryer (Bionomic Industries Inc.).

Spray scrubbers using cyclonic action do apply impaction and interception forces to the gas stream and therefore exhibit higher particulate removal rates.

## *Design basics*

Gas inlet velocities of spray towers are in the range of 50 to 60 ft/sec as is common with other wet scrubbing systems. Sometimes, for gas distribution purposes, the gas is conveyed to the scrubber at this velocity to keep particulate entrained but is reduced to 40 to 45 ft/sec at the scrubber itself.

Counter-current spray towers normally operate at vertical gas velocities of 8 to 10 ft/sec; however, in recent years efforts have been made to operate them at up to 15 ft/sec. At approximately 15 to 16 ft/sec gas velocity, the descending spray tends to be held up or fluidize. At this point, the spray tower begins to transition to a fluidized bed scrubber. The spray nozzle method of liquid injection becomes of diminishing importance as the gas velocity rises since the spray is actually created by the ascending gas at these speeds.

The chevron zones of these designs usually use a face (open vessel) velocity of approximately 10 to 12 ft/sec. Interface trays, much like weeping sieve trays, are used in some designs to suppress liquid carry over and isolate the dilute wash water spray that is applied to clean the chevrons.

If a top mounted stack is used, the gas outlet velocity will be often under 45 ft/sec to reduce the chance of entrainment. Speeds of 35 to 45 ft/sec are common.

For FGD systems, the pH (and sometimes, density) of the scrubbing solution is controlled to operate within a window bounded by efficiency and scaling. For limestone slurry scrubbing, this results in a pH range of approximately 5.6 to 6.5 in the slurry and 5.4 to 6.2 in the sump. For lime, the slurry is approximately pH 7 to 8 going into the absorber and 5 to 5.5 in the sump.

Nozzle pressures of 30 to 60 psig are used, depending on the application.

Given that the liquid surface area of a spray decreases as the distance from the nozzle increases, high liquid to gas (L/G) ratios are used, that is, using multiple nozzles, to maintain the net surface area at a sufficiently high level. As a result, it is not uncommon to see L/G ratios of 50 to 100 gpm/1000 acfm treated being used in these designs. The pumping cost, therefore, becomes a significant design factor.

Given the open area of the vessel, however, the gas side pressure drop is quite low. Spray towers operate at pressure drops of only 1 to 3 inches water column. This keeps the fan horsepower low. This factor is significant for high gas volume applications.

Spray towers of more than 30 ft diameter have been built. The simple vessel design allows these large diameter vessels to be made. For high gas volumes, multiple towers are used in parallel. On utility boiler systems, redundancy is often built-in by having the capability to switch between operating and standby vessels using suitable isolation dampers.

## *Operating suggestions*

Over the past 40 years, operators of spray towers have developed specific methods for the best operation of these devices.

Some basic techniques include separation of solids that would be sufficiently large to plug the spray nozzles. Settling tanks, liquid cyclones are often used to separate the large solids. The nozzles themselves are designed for high solids throughput and wear resistance. Often of full cone design, the nozzles are arranged in patterns that cover the vessel but reduce zones where agglomeration of droplets (resulting in an undesirable reduction of surface area per unit volume) can occur. Multiple spray levels increase the probability that all zones are covered.

Once absorption occurs, the chemical reaction kinetics in the liquid may be slow. In FGD systems, the scrubbing liquid is often impounded in an agitated tank to allow crystal formation and settling. Residual crystals are allowed to recycle to help scour the scrubber interior and reduce hard scaling. Sometimes, chemical additives (such as adipic acid) are administered to improve the scrubbing performance. Oxygen is sometimes injected to oxidize the sulfite component of the scrubbing solution to sulfate so that the sulfate may be more easily settled and removed.

For materials of construction, the vessels are often mild steel with rubber lining for utility FGD application. If chlorides are present, alloys such as 904L, AL6XN, C-22, or C-276 are used.

Chevrons in many FGD designs are installed in stages given the high droplet loading. A coarse stage of widely spaced blades is used followed by narrower spaced chevrons either in vertical flow or horizontal flow configuration. Figure 14.5 shows a chevron set using multiple design configurations to arrest the spray.

Spray scrubbers have been made in a wide variety of materials from carbon steel, to rubber-lined steel, to FRP, to exotic alloys. Some designs have

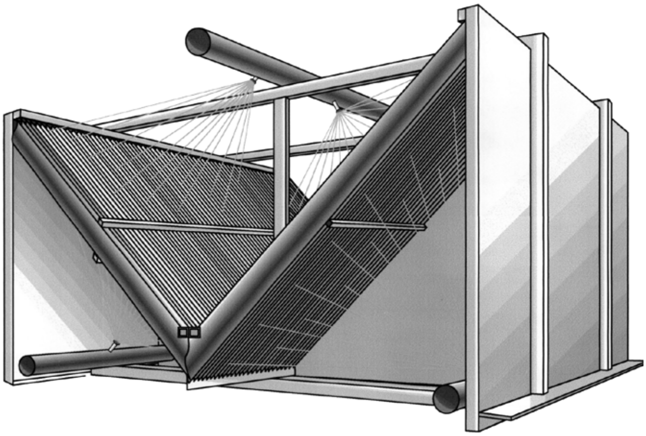

***Figure 14.5*** Multiple chevron stages (Munters Corp.).

even received food grade interior polishing to handle explosive type material. Preformed spray scrubbers usually are equipped with retractable spray headers and individual shut-off valves for nozzle servicing. Obviously, one must plan for sufficient pull space to remove such headers.

If large solids are anticipated that could plug the nozzles, strainers on the recirculation loop should be used. It is also advised to locate any vessel access door such that the worker can gain entrance to the scrubber easily. A common location is directly over the separator inlet duct.

Preformed spray scrubbers perform like Venturi scrubbers operating at 6 to 10 inches water column pressure drop. This means they are best suited for the control of particulate above 10 μm aerodynamic diameter. For gas absorption, an inlet spray type unit can achieve about 0.8 to 1.5 transfer units of separation. Ones with wall mounted sprays can often achieve higher mass transfer rates, but are more likely to entrain droplets.

Spray towers and spray scrubbers are popular devices for use in gas absorption applications and, in the case of preformed spray scrubbers, for particulate control on particles in excess of 10 μm diameter.

# chapter 15

# Nitrogen oxide ($NO_x$) control*

## Device type

The control of nitrogen oxides ($NO_x$) using thermal methods encompasses a variety of devices. This chapter focuses on $NO_x$ and its control using combustion modifications, postcombustion thermal and catalytic methods, and combinations thereof.

## Typical applications and uses

### Combustion sources

Various combustion sources produce $NO_x$. *Boilers* use a burner to combust the fuel and release heat. The heat boils water and generates steam. Larger boilers usually contain the water and steam inside tubes (water-tube boilers) surrounding a fire box. Some smaller boilers have a combustion tunnel surrounded by water (fire-tube boilers). The water-tube boiler has an analog in the petroleum refinery — the *process heater.*

The process heater is used to heat or transform a process fluid, for example, crude oil. Analogous to the water-tube boiler, the process fluid is pumped through tubes surrounding a fire box. Most boilers are heated with burners in the horizontal direction. Process heaters are often fired with the burners in the floor. However, some process heaters are wall-fired, and some specialty reactors such as reformers are down-fired from the roof. Process heaters may be tall round floor-fired units (known as vertical cylindrical [VC] heaters), or rectangular units known as cabin-type, which are often floor fired but may also be wall-fired. Some specialty heaters, such as ethylene cracking furnaces and reformers, use heat to chemically transform the process fluid.

---

* This chapter is contributed by Joseph Colannino, John Zink Company, LLC, Tulsa, Oklahoma.

Gas turbines and reciprocating engines transform heat into mechanical motion. Hazardous waste incinerators use high temperatures to destroy waste products. All conventional combustion processes form $NO_x$.

## Operating principles

Nitrogen oxides ($NO_x$) are a criteria pollutant as classified by the Environmental Protection Agency (EPA). Accordingly, the EPA has established National Ambient Air Quality Standards (NAAQS). Local air quality districts translate the NAAQS into local regulations for various combustion sources. These regulations vary widely from region to region. The purpose of this chapter is to show how $NO_x$ is formed, and discuss some methods for ameliorating it.

$NO_x$ is generated from combustion systems in three ways. The mechanisms are referred to as *thermal* (Zeldovich), *fuel-bound*, and *prompt* (Fenimore).

## Primary mechanisms used

$NO_x$ may be reduced at the source (combustion modification) or after the fact (postcombustion treatment). Combustion modifications comprise thermal strategies, staging strategies, and dilution strategies. Postcombustion methods comprise flue-gas treatment techniques described later.

## Design basics

### Different forms of $NO_x$

Nitric oxide (NO) is the most predominant form of $NO_x$. Most boilers and process heaters generate more than 90% of $NO_x$ as NO. However, gas turbines and other combustion systems that operate with lots of extra air can generate significant quantities of visible nitrogen dioxide ($NO_2$). $NO_2$ is a reddish-brown color and responsible for the brown haze called smog. NO, although odorless, oxidizes slowly to $NO_2$ in the atmosphere. Hence most $NO_x$ requirements are given as *$NO_2$ equivalents.*

Hydrocarbons and $NO_x$ react to ground level ozone. Ozone at high altitude is good because it filters out harmful ultraviolet rays. Ozone at ground level is bad because it interferes with respiration, especially for sensitive individuals such as asthmatics and the elderly. The complicated chemistry among ozone, $NO_x$, and hydrocarbons is why hydrocarbons and $NO_x$ are strictly regulated. Carbon monoxide (CO) can also participate in the chemistry and is also a regulated pollutant.

### $NO_x$ measurement units

$NO_x$ is measured in a variety of differing units depending on the source. For example, $NO_x$ from most boilers are regulated as volume concentrations at a reference oxygen condition, for example, 100 parts per million, dry volume, corrected (ppmvdc) to 3% $O_2$. Most $NO_x$ meters analyze their samples after

*Figure 15.1* $NO_x$ analyzer (Air Instruments and Measurements, Inc.).

water is condensed. Failure to condense the water before measurement in a dry analyzer could damage the analyzer. Such analyzers are known as extractive analyzers because they must first extract a sample from the stack, condense the water, and then send the dry conditioned sample to the analyzer. *In situ* analyzers read $NO_x$ directly in the hot wet stream. Figure 15.1 shows an analyzer designed to measure the $NO_x$ content *in situ* and report the result in meaningful $NO_x$ units. It uses a nondispersive infrared beam and optical measurement techniques.

The most popular type of post-combustion treatment is selective catalytic reduction (SCR). Ammonia or urea is injected in the flue gas near a catalyst. The net reaction is:

$$2NO + 0.5\ O_2 + 2NH_3 \rightarrow 2N_2 + 3\ H_2O$$

Catalysts perform best within a narrow operating temperature range. In some cases flue gas tempering or conditioning is required. This may include evaporative coolers, air tempering systems, heat exchangers, and so on. Catalyst activity may be adversely affected due to abrasion with ash, high sulfur in the flue gas, or metal poisons.

$NO_x$ is formed in combustion systems in three primary ways. The following provides an overview of each type.

## *Thermal $NO_x$*

The thermal $NO_x$ mechanism comprises the high temperature fusion of nitrogen and oxygen. This reaction occurs when air is heated to high temperatures such as those that exist in a flame. The reaction is not very efficient.

Air contains 79% nitrogen ($N_2$) and 21% oxygen ($O_2$) by volume. Despite this, only 100 parts per million (ppm) or so of $NO_x$ is produced by the thermal $NO_x$ mechanism. Notwithstanding, $NO_x$ is currently regulated to less than 40 ppm in many localities, and less than 10 ppm in some regions. Southern California and the Houston-Galveston area are two of the most highly restricted regions for allowable $NO_x$ emissions.

The overall reaction for thermal $NO_x$ formation is:

$$N_2 + O_2 \rightarrow 2\ NO \tag{15.1}$$

However, the actual elemental mechanism is much more complicated. Nitrogen is a diatomic molecule held together with a triple covalent bond (N≡N). This bond takes a lot of energy to rupture, which accounts for the poor efficiency of the overall reaction. Oxygen, however is a diatomic molecule held together by a double covalent bond (O=O). This bond is much easier to rupture. In fact, oxygen is the second most reactive gas in the periodic table (exceeded only by fluorine, which has a single covalent bond, F-F). These facts make combustion possible, but also allow for some attendant $NO_x$ formation. At high temperature, diatomic oxygen forms atomic oxygen.

$$O_2 \rightarrow 2\ O \tag{15.2}$$

Atomic oxygen is very reactive. The fuel consumes virtually all of the reacting oxygen in a combustion system. However, some free radical oxygen collides with diatomic nitrogen in the combustion air to produce nitric oxide (NO).

$$O + N_2 = NO + N \tag{15.3}$$

We use the equals sign ( = ) to indicate that the reaction proceeds on a molecular level, as opposed to the arrow (→), which indicates a net reaction that is a combined series of elemental steps. The atomic nitrogen is also extremely reactive and can attack diatomic oxygen to produce another molecule of nitric oxide.

$$N + O_2 = NO + O \tag{15.4}$$

The left over atomic oxygen goes on to propagate the chain reaction via (15.3). Adding (15.3) and (15.4), we obtain the net reaction given by (15.1).

$$O + N_2 = NO + N \tag{15.3}$$

$$N + O_2 = NO + O \tag{15.4}$$

$$N_2 + O_2 \rightarrow 2\ NO \tag{15.1}$$

From this chemistry we can write a rate law. If we presume that reaction (15.3) is the rate-limiting reaction and that oxygen is in partial equilibrium with its atomic form ($^1/_2\ O_2 \rightarrow O$), then the rate law becomes

$$[\mathrm{NO}] = \int A e^{-\frac{b}{T}} \sqrt{[\mathrm{O_2}]}[\mathrm{N_2}]dt \tag{15.5}$$

where the quantities in brackets are the volume concentrations of the enclosed species, $A$ and $b$ are constants, $T$ is the absolute temperature, and $t$ is time. Reaction (15.5) cannot be integrated over the tortured path of an industrial burner because the actual time-temperature-concentration path is unknown. However, the equation does tell us something useful about thermal $NO_x$ formation. Namely, *$NO_x$ is exponentially related to temperature. A small temperature difference makes a big $NO_x$ difference.* This means that hot spots in the flame can dominate $NO_x$ formation. Second, *$NO_x$ is proportional to at least the square root of oxygen concentration.* The nitrogen concentration is less important because it does not change much with little or lots of air. However, the oxygen concentration changes markedly with increase in combustion air, as it is being consumed in the fuel/air reaction. Finally, *the time at these conditions affects $NO_x$.* Therefore, the highest $NO_x$ will be formed by persistent hot spots in the flame and at high oxygen concentration.

For these reasons, a low $NO_x$ burner is designed to operate at a temperature that reduces $NO_x$ formation, has a uniform temperature and oxygen pattern within that range, and has a residence time that is conducive to $NO_x$ control.

Special burners have been developed for the purpose of extracting the maximum heat from the fuel while emitting the lowest $NO_x$. Figure 15.2 shows a modern low $NO_x$ combustor and its principal components.

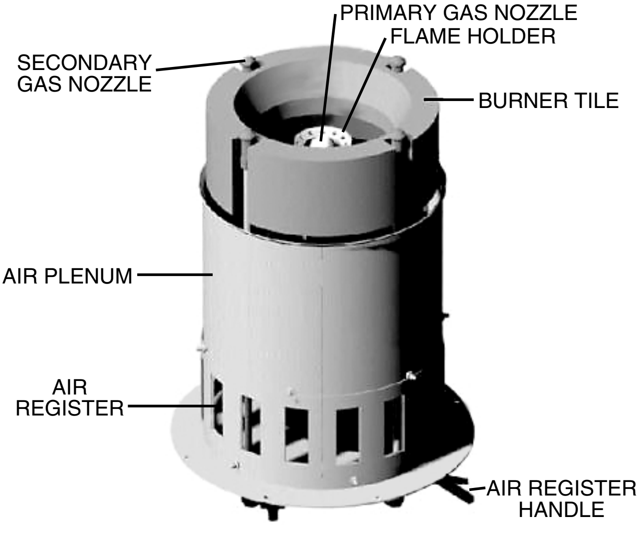

***Figure 15.2*** Low $NO_x$ burner and components (John Zink Co.).

### *Fuel-bound NO$_x$*

When nitrogen is bound in the fuel molecule itself, the fuel-bound mechanism operates. The nitrogen must be part of the chemical structure of the fuel. For example, natural gas containing a few percent of nitrogen gas in the fuel does not produce NO$_x$ via the fuel-bound route because the nitrogen is not bound as part of the fuel molecule. Coal and certain fuel oils have nitrogen as part of the fuel molecule, and in those cases the fuel-bound NO$_x$ mechanism may be the predominant NO$_x$ production mode.

As an illustration, consider a hydrocarbon like heavy fuel oil having a few percent nitrogen bound in its structure ($C_xH_yN$), where the subscripts x and y indicate the number of carbon and hydrogen atoms in the molecule, respectively. As the fuel is heated and before it can even react with oxygen, it falls apart to generate some cyano intermediates (HCN, CN). The destruction of a fuel in the presence of heat but not oxygen is referred to as pyrolysis.

$$C_xH_yN \rightarrow \text{HCN, CN} \tag{15.6}$$

The pyrolysis reaction is a low-temperature reaction. However the intermediate cyano species may then react with oxygen to form NO and other species.

$$\text{HCN, CN} + O_2 \rightarrow \text{NO} + \ldots \tag{15.7}$$

*The greater the weight percent of fuel-bound nitrogen in the fuel the greater the amount of associated NO$_x$.* However, there is a law of diminishing returns, and at higher nitrogen concentrations things are not as bad as they could be; not all of the fuel bound nitrogen will be converted to NO$_x$. However, for small concentrations of fuel-bound nitrogen, for example, a few hundred ppms in the fuel, the conversion to NO$_x$ is quantitative. Because the pyrolysis reaction is a low temperature reaction, the peak flame temperature plays a small role in fuel-bound NO$_x$. The more important consideration is access of oxygen to the HCN and CN. Therefore, to reduce fuel-bound NO$_x$, dilution strategies like flue-gas recirculation, staged air, and fuel dilution are superior to reducing peak flame temperature.

The use of a reference oxygen condition is required for all volume-based measurements. Otherwise, one could simply dilute the effluent stream with air and measure-reduced concentrations while making no real reduction in emissions. The factor for dilution correction differs slightly from region to region, but is generally of the following form.

$$\text{Corrected NO}_x = \frac{\text{Measured NO}_x \times (20.9 - \text{oxygen reference})}{(20.9 - \text{measured oxygen})} \tag{15.8}$$

For example, 100 ppm NO$_x$ measured at 5.3% O$_2$ works out to be about 115 ppm corrected to 3% O$_2$, for example, $100 \times (20.9 - 3)/(20.9 - 5.3) = 114.7$.

An alternate unit for $NO_x$ from boilers is pounds per million BTU, expressed as lb $NO_2$/MMBTU. With this unit we have a number of options to consider. First, is the heat release the higher heating or lower heating value? The higher heating value considers the heat from the fuel presuming that the stack gas is cool enough to condense water vapor. For most boilers, the stack is not so cool, but the calculation is usually done on a higher-heating-value basis anyway.

The lower heating value is often used for process heaters. The lower heating value calculates fuel energy presuming that the stack gas does not condense. Since the lower heating value does not benefit from the heat of condensation, it is lesser by this amount than the higher heating value. For most hydrocarbons the lower heating value is about 10% lower than the higher heating value. However, one should calculate the difference precisely. For CO (whose combustion generates no water), higher and lower heating values are identical. For hydrogen (whose combustion generates only water) there is a large difference between higher and lower heating value.

For natural gas combustion presuming a higher heating value basis, 40 ppm at 3% $O_2$ = 0.05 lb/MMBTU, and the relationship is linear. That is 0.10 lb/MMBTU = 80 ppm, ceteris paribus. Process heaters generally use a lower heating value basis, which means that the lb/MMBtu equivalent will be a larger number because we are dividing by a lesser heating value.

Gas turbines are generally regulated to a 15% oxygen reference, while reciprocating engines are regulated on a gram-$NO_2$ per brake-horse-power basis (g/bhp). Some utility boilers are regulated on the absorbed duty (that is the heat release less the heat lost out the stack). For these reasons, one must have knowledge of the customary units of the governing regulatory body.

## *Thermal-$NO_x$ control strategies*

Thermal strategies are those that act to lower the peak flame temperature and thus reduce $NO_x$ from the thermal mechanism. One such thermal strategy is flue-gas recirculation (FGR). By recirculating a portion of the flue gas into the combustion air, the flame is cooled. A secondary effect of FGR is to reduce the oxygen concentration, again lowering $NO_x$ from the thermal mechanism. The increased mass flow from FGR also adds turbulence and homogenizes the flame, reducing hot spots. The disadvantage of FGR is that fan power is required to recirculate the flue gas. However, FGR can cut $NO_x$ in half. A typical natural gas flame with FGR produces 50 ppm $NO_x$, while the flame without FGR produces about 100 ppm. Generally, no more than about 25% FGR can be recirculated in a conventional burner before stability problems occur.

Steam or water can be added to the flame by means of an injection nozzle. The nozzle is moved to a location that does not interfere with combustion but cools off the flame. This strategy costs little in capital cost to implement. However, the water or steam carries heat away from the flame that is not recovered, so thermal efficiency losses result.

## *Dilution strategies*

FGR acts primarily to cool the flame and secondarily as a dilution strategy for the oxygen in the combustion air. Actually, recirculating flue gas to the fuel side for gas fuels can be more effective than FGR in reducing $NO_x$ for several reasons. First, gaseous fuels are usually supplied at pressures of 40 psig or above for industrial settings. This fuel energy may be used in an eductor arrangement to pull flue gas from the stack. When such a strategy is feasible, fuel-dilution requires no external power. Second, diluting the fuel directly reduces concentrations of HCN and CN that occur on the fuel side, thus reducing fuel-bound and prompt $NO_x$. Diluting the fuel or air stream with any inert agent, be it nitrogen, $CO_2$, noncombustible waste stream, or steam reduces $NO_x$ from thermal and dilution mechanisms. Care must be taken not to reduce the fuel or oxygen near or below their flammability limits, otherwise the flame will become unstable or go out. In extreme cases, burner instability can result in an explosion if a flammable mixture fills the furnace and suddenly finds a source of ignition.

## *Staging strategies*

Rather than mix all the fuel and air together at once in a hot combustion zone, either the fuel, air, or both may be staged along the length of the burner. The stepwise addition of fuel (two or three stages are sufficient) delays mixing and allows for some heat transfer to the surroundings before further combustion takes place. Air staging is generally considered more effective to reduce fuel-bound nitrogen, while fuel staging is more effective at reducing thermal $NO_x$. Figure 15.3 shows a staged combustion burner designed specifically for $NO_x$ reduction.

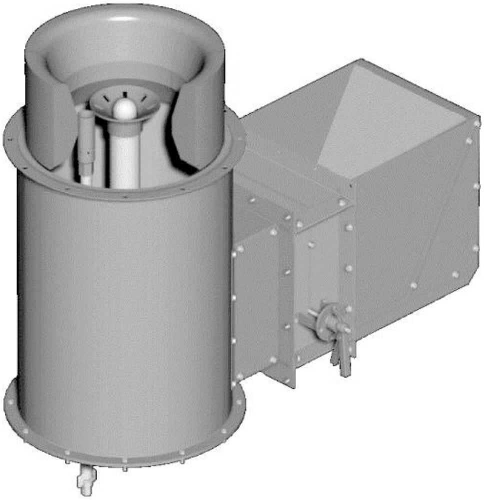

***Figure 15.3*** Staged combustion burner (John Zink Co.).

## *Postcombustion strategies*

Selective noncatalytic reduction (SNCR) uses ammonia (or an ammoniacal agent) to reduce $NO_x$. At some temperature between 1400 and 1800°F, ammonia dissociates to form $NH_2$.

$$NH_3 = NH_2 + H \tag{15.9}$$

$NH_2$ is a short-lived and very reactive species that reduces NO to nitrogen and water.

$$NH_2 + NO = N_2 + H_2O. \tag{15.10}$$

SNCR can reduce $NO_x$ to 50 ppm or lower. However, such reaction temperatures are found within the furnace itself. Therefore, to provide adequate mixing and residence time, SNCR requires a large furnace (e.g., coal-fired and municipal-solid waste systems and some large utility boilers). Most SCR catalysts are base metal oxides, especially vanadia and titania deposited on an alumina honeycomb surface. A typical honeycomb type catalyst block containing exotic base metal catalysts is shown in Figure 15.4.

By adding a catalyst, one can lower the required temperature window to 500 to 750°F. These temperatures occur close to the stack in process heaters and within the air-preheaters of larger boilers. So the size of the furnace is not such an important factor. The strategy is also more effective than SNCR, generating 90% $NO_x$ reductions or greater. The important steps are adsorption of ammonia and $NO_2$ onto the catalyst surface (X-Y). $NO_2$ may be formed rapidly from NO by oxygen on the catalyst surface, or in

***Figure 15.4*** Postcombustion honeycomb catalyst (Bremco).

the gas phase. Water on the surface protonates the ammonia to $NH_4$. The essential chemistry is

$$NH_3 + \text{-}X \rightarrow \text{(with moisture) } X\text{-}NH_4^+ \tag{15.11}$$

$$NO_2 + \text{–}Y \rightarrow X\text{-}NO_2 \tag{15.12}$$

The adjacent sites hold the ammonia and $NO_2$ in proximity, where they quickly react, restoring the catalyst surface for additional reactions. An electron from the surface is required to balance the reaction.

$$X\text{-}NH_4^+ + Y\text{-}NO_2 + e^- = X\text{-}Y + N_2 + 2\ H_2O \tag{15.13}$$

## *Operating/application suggestions*

A properly designed $NO_x$ control system starts with the accurate determination (or estimation) of the NO and $NO_2$ that is or will be produced from the source.

Accurate sizing and specification of low $NO_x$ burners requires consideration of fuel properties, furnace operating temperatures, excess oxygen conditions, and knowledge of the service application. This almost always requires detailed conversations between the burner vendor and the end-user.

Likewise, SCR systems require detailed conversations between the end-user and the SCR system supplier. The catalyst can be rendered ineffective by physical blinding with inert particulate, abrasion, or poisoning by certain heavy metals or sulfur. An inventory of any possible fouling or poisoning agents must be derived first by analyzing the fuel, its metals content, and its propensity to form oxides or produce partially burned or unburned carbonaceous compounds and comparing the result to known fouling agents for the proposed catalyst. Possible remedies include, among others, removal of fouling agents before the catalytic stage, use of a sacrificial pre-catalyst, or more frequent catalyst replacement.

In SCR or SNCR systems, unreacted ammonia that slips through the system is termed *ammonia slip*. Ammonia slip is more easily controlled on base-loaded (steady-state) operations. In such a case, the ammonia injection rate can be determined by experience and testing, then maintained in an optimum range. Feedback controls can sometimes be used to adjust the ammonia rate, however, to date, these have proven to be slow to respond. Usually, some ammonia slip is tolerated, and larger $NO_x$ reductions are possible if higher ammonia slip rates are acceptable. Some regulatory districts are putting limitations on the total allowable slip, thus complicating $NO_x$ control.

# chapter 16

# Thermal oxidizers*

## Device type

Thermal oxidizers (TOX) are used to destroy objectionable hydrocarbons contained in waste streams from manufacturing plants. The wastes may be solids, liquids, or vapors. They are usually generated continuously — otherwise landfill may be economically preferred for solids and liquids, while emergency flares might be preferred for destruction of many waste gases. Thermal oxidizers are designed to use heat energy to convert hydrocarbon contaminants to carbon dioxide and water vapor, and contaminant metals to their oxide form, under controlled conditions.

## Typical applications

Thermal oxidizers are used to control combustible contaminant emissions from dozens of sources. Major areas include printing operations, chemical and hydrocarbon processing, painting, coating, and converting, distillation, sludge drying, soil remediation, plasticizer emissions control, extruder emissions, and textile manufacturing.

They are often used after wet scrubbers where the gas stream contains both water-soluble and hydrocarbon emissions. They are often followed by wet scrubbers where the volatile organic compound (VOC) is halogenated and, upon combustion, can form inorganic acids such as HCl.

In general, if the source emits a combustible VOC that is not economical to recover, it is a candidate for control by a thermal oxidizer.

## Operating principles

A TOX simply heats the waste material in the presence of air to allow the hydrocarbon molecules present to burn (oxidize at elevated temperature). The simplest TOX consists of a burner, a holding chamber (furnace), and a stack (to duct the combustion products to atmosphere). Furnace temperature

---

* This chapter was contributed by Dan Banks, Banks Engineering, Inc., Tulsa, Oklahoma.

can range from 500 to 2500°F, depending on TOX design and the degree of hydrocarbon destruction needed. If 99% of the incoming hydrocarbons are destroyed, the TOX efficiency is 99% (expressed as 99% destruction and removal efficiency or 99% DRE). Usually natural gas or other auxiliary fuel is ignited in the burner to heat up the TOX and often to supplement the heating value of the waste stream(s) to assure proper temperature control. If the waste is rich in hydrocarbons, extra air, or sometimes water sprays, are used to prevent overheating. Various methods have been developed to reduce fuel usage, keep generation of $NO_x$ and other pollutants low, recover available heat from the combustion products and to remove any particulate or acid gas ($HCl$, $SO_2$) formed during waste destruction.

To make the best use of this application of heat energy, the thermal oxidizer is usually lined with insulating refractory material.

Figure 16.1 shows a thermal oxidizer used for the control of non-condensable gases from a paper pulp mill. The unit consists of a specially designed burner, burner controls, insulated combustion chamber, and temperature controls.

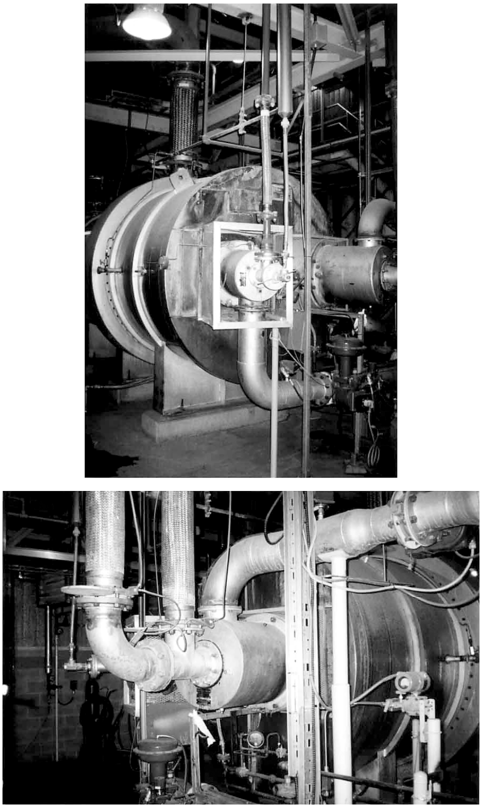

***Figure 16.1*** Non-condensable gas thermal oxidizer (Banks Engineering, Inc.).

## *Primary mechanisms used*

Reacting hydrocarbons with oxygen results in release of energy. An example is the oxidation of natural gas (methane):

$$CH_4 + 2O_2 \rightarrow CO_2 + 2H_2O$$

Where one molecule of methane, combined with two molecules of oxygen, forms two molecules of carbon dioxide and two molecules of water vapor.

In reality, if air (79% nitrogen) is used to provide the oxygen, other gases go along for the ride:

$$CH_4 + 2O_2 + 7.5N_2 \rightarrow CO_2 + 2H_2O + 7.5N_2$$

This is the balanced stoichiometric equation for combustion of methane with air, and is typical of the combustion equation that is used in designing a TOX system for destruction of any hydrocarbon. When one pound of methane is burned in a TOX furnace, the product gases exit at much higher temperature — the net heat released by burning this one pound of hydrocarbon is 21,280 BTU. The methane reaction written above would produce products at over 3000˚F, requiring special furnace construction, so extra air or water sprays (or a low heating-value waste stream) would be added to produce products at 2000°F or lower.

High temperature oxidation proceeds at a higher rate at higher temperatures, but as less and less of the subject hydrocarbon is left, the destruction rate slows. Operating the TOX furnace at a higher temperature increases the DRE in a given furnace, or allows use of a smaller furnace to achieve the original DRE. Some hydrocarbons are easy to destroy, requiring low temperatures and little retention time in the furnace (small furnace). Others require higher temperatures and longer reaction times for the same DRE. For instance, 99.99% DRE of hydrogen sulfide requires about 1300°F and 0.6 second retention time, while 99.99% DRE of dichloromethane requires about 1600°F and 2 seconds retention time.

If a chlorinated hydrocarbon is oxidized, the raw unbalanced equation might look like this:

$$CH_2Cl_2 + O_2 + N_2 \rightarrow CO_2 + H_2O + HCl + N_2$$

In this case, dichloromethane burns to produce carbon dioxide, water vapor, and hydrochloric acid. If enough HCl is formed, discharge directly to atmosphere would not be permitted and the combustion products would be cooled and reacted with a chemical such as caustic (NaOH) to remove most of the HCl. The same is true when the waste contains hydrogen sulfide ($H_2S$ forms $SO_2$ = sulfur dioxide). If the waste contains ash or dissolved solids (like salt) then the combustion products will contain particulate matter. Excessive particulate matter must be removed (Venturi Scrubber, electrostatic precipitator, bag filter, etc.) before the combustion products are discharged to atmosphere.

## *Design basics*

A thermal oxidizer always includes these items:

1. Auxiliary fuel burner
2. Air source (blower or natural convection)
3. Furnace (temperature controlled chamber where the oxidation reactions occur)
4. Stack (to direct the combustion products to atmosphere)
5. Control system (to verify proper operation and control excursions)

Figure 16.2 shows a typical thermal oxidizer used to destroy hydrocarbon emissions. The system consists of the burner (to the left, top), the lined combustion chamber, a downfired quencher, and exhaust ductwork (lower right).

Depending on the waste(s) to be treated, a TOX system can also contain:

1. Waste heat boiler (cools the combustion products, recovering the heat generated in the furnace by evaporating water to make steam for other uses)
2. Wet scrubber (packed bed, Venturi or spray scrubber, where acid gases and/or particles are removed from the combustion products)
3. Dry scrubber (bag filter, electrostatic precipitator, etc., where particulate matter, and sometimes acid gases are removed from the products)
4. $NO_x$ (nitrogen oxides) reduction hardware (catalytic, noncatalytic or wet scrubber $NO_x$ removal processes)

***Figure 16.2*** Thermal oxidizer for VOC control (Banks Engineering, Inc.).

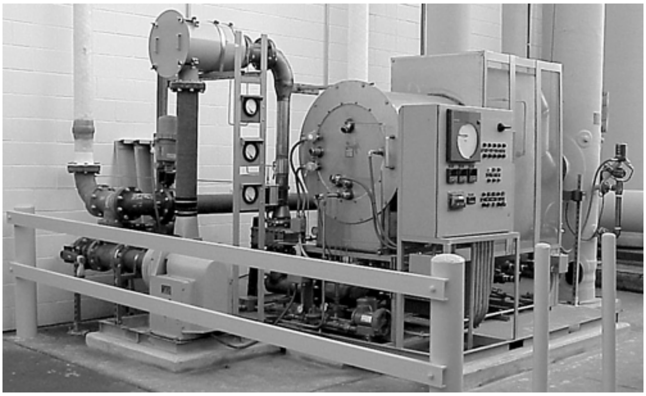

*Figure 16.3* Thermal oxidizer (Alzeta Corp.).

5. Preheat exchanger (usually shell/tube or plate/plate device with combustion products on one side and waste or combustion air on the other side, where heat is recovered and directed back into the TOX furnace to save auxiliary fuel)
6. Catalyst bed (speeds oxidation of particle-free waste gas, allowing lower operating temperature for the same DRE as a noncatalytic TOX)
7. Concentration methods to eliminate some of the inerts in a waste stream before sending the residual hydrocarbons to the TOX (often accomplished with a heat regenerated zeolite bed).

In Figure 16.3, we can see a thermal oxidizer system arranged as a compact unit complete with local control panel.

Direct thermal units burn fuel gas or fuel oil to assure waste ignition and maintain desired furnace temperature, when necessary. A recuperative TOX system adds a heat exchanger to transfer heat from the combustion products to the incoming waste gas or combustion air, reducing fuel consumption. Direct thermal TOX systems can be used to handle waste liquids and waste gases.

A variation on the direct flame type thermal oxidizer is a design provided by Alzeta (California). Figure 16.4 shows a facility using an Alzeta 500 cfm flameless thermal oxidizer equipped with an alloy C-276 quencher and fiberglass packed tower. These flameless designs incorporate special internal porous modules that provide a combustion surface instead of a flamefront as in a conventional burner. Such designs in theory provide for superior combustion control and fuel/air mixing resulting in decreased emissions and higher thermal efficiency.

Catalytic TOX units may also fire fuel oil or fuel gas, but smaller ones may use electrical resistance heating instead. Catalyst reduces the temperature needed for a specific DRE, reducing fuel consumption. These units usually include a heat exchanger to further reduce fuel demand by transferring heat from the combustion products to the waste gas before furnace entry.

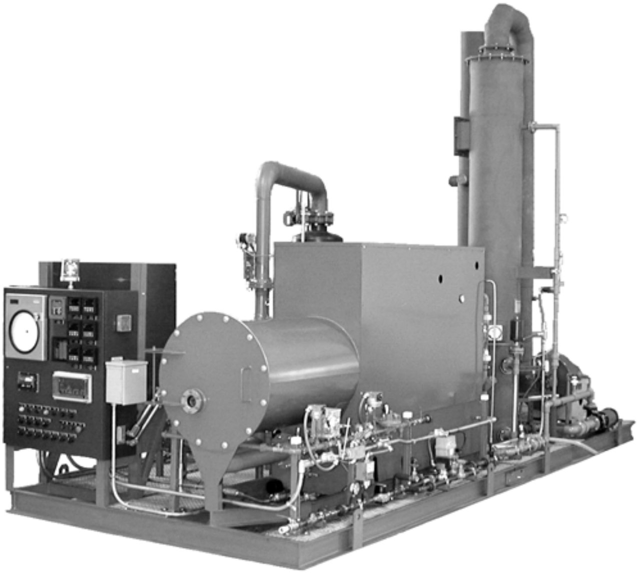

*Figure 16.4* Flameless thermal oxidizer (Alzeta Corp.).

Catalytic TOX units can be used to handle particulate-free waste gases containing small concentrations of hydrocarbons; excessive temperature and entrained dust interfere with the catalyst.

A catalytic thermal oxidizer is shown in Figure 16.5. This particular one controls VOC emissions from a semiconductor manufacturing facility.

Regenerative thermal oxidizers (RTOs) route the waste gas through thermal mass packed beds for heat recovery, allowing very low fuel requirements, even for lightly contaminated waste air streams. RTOs are commonly used to treat large flows of air containing traces of hydrocarbons. Many

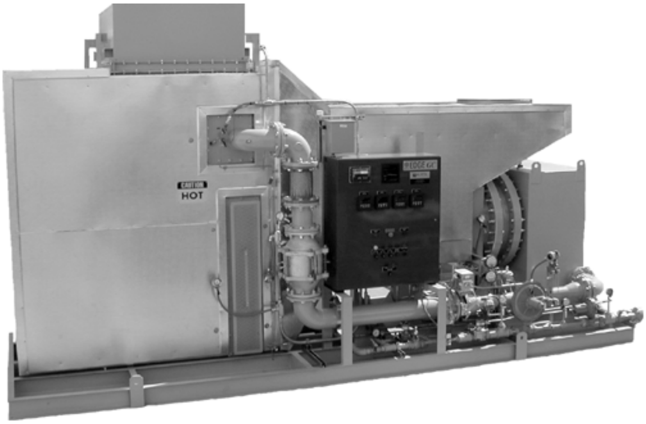

*Figure 16.5* Catalytic thermal oxidizer (Alzeta Corp.).

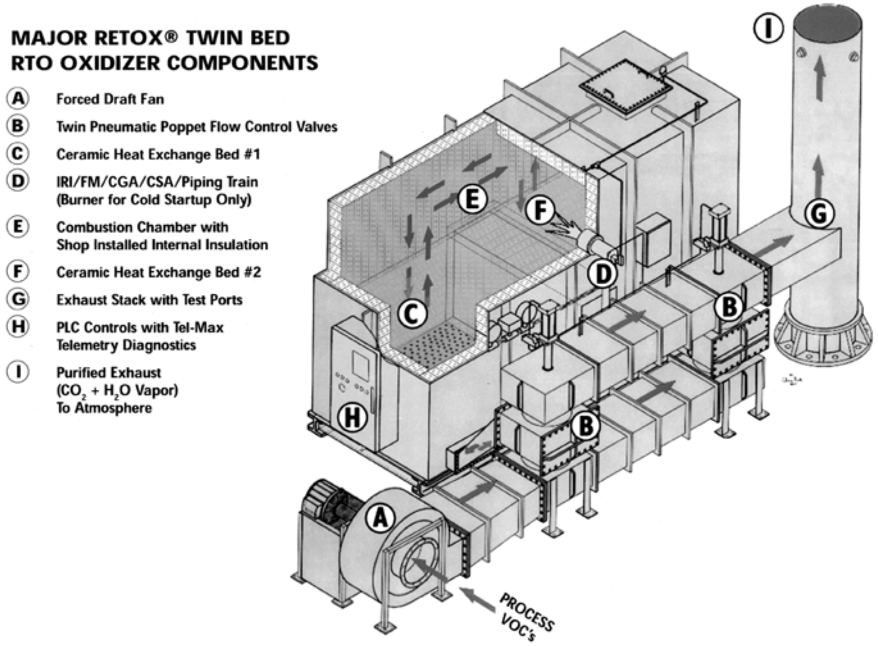

*Figure 16.6* Regenerative thermal oxidizer (Adwest Technologies, Inc.).

operate with little or no auxiliary fuel due to the excellent heat recovery offered by packed beds, but waste containing too much hydrocarbon can overheat RTOs.

Figure 16.6 is a diagram of the functional components of a typical RTO. A series of dampers alternately feeds gases to the appropriate chamber for either preheating or combustion. The thermal mass of the refractory or ceramic fill retains the heat sufficiently to allow reasonable time between cycles.

The VOCs enter at *A* and are directed through a plenum containing dampers, *B*, which permit switching gas flows between the chambers; *C*, which contain thermal mass. A supplemental burner *D* provides any additional heat to sustain combustion (if required). The hot gases exit through the alternative thermal mass, *F*, thereby heating it. The combustion products leave through the stack, *G*. The control panel, *H*, switches between chambers so that the desired combustion conditions are maintained.

An actual installation may look something like the installation shown in Figure 16.7.

## *Operating suggestions*

Claus sulfur recovery plants generate a waste gas containing $H_2S$, CO, water vapor, and inert gases. Waste flow is steady. TOX operation ranges from 1200 to 1500°F with furnace retention time of 0.6 to 1.0 seconds. A

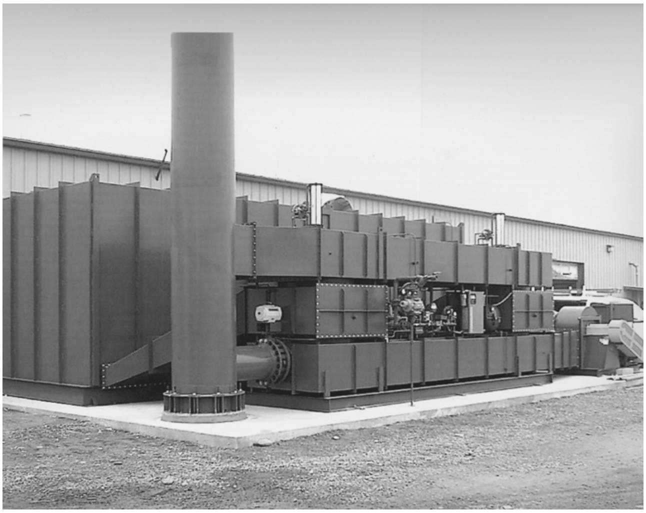

*Figure 16.7* RTO type oxidizer (Adwest Technologies, Inc.).

vertical refractory lined furnace is often used, allowing a shorter stack to improve dispersion of the combustion products (which contain $SO_2$). The furnace/stack generates draft, and burner operation does not need a combustion air blower. A waste heat recovery boiler may be added, in which case the furnace is horizontal and a combustion air blower is added.

Pharmaceutical plants generate air-rich or nitrogen-rich waste gases from various batch reactors. Waste flow and composition may change suddenly, so burner control requires special care. A pharmaceutical TOX may operate at 1600 to 2000°F with 1 second retention time, depending on the waste components and performance required. A waste heat boiler and wet scrubber (for hydrochloric acid produced by combustion of chlorinated compounds) are often used.

Kraft pulp mills generate several acidic waste gases during papermaking. Several of the waste streams can contain both oxygen and hydrocarbons, presenting flashback problems. Stainless burner and waste duct construction is common. A wet scrubber is used to remove $SO_2$, which is generated during combustion of the $H_2S$ and similar compounds in the waste gas. A turpentine byproduct may be burned in special guns to reduce firing of natural gas or fuel oil.

A TOX system must be designed to handle the full range of waste types, waste flows, and waste compositions. If errors are made, the system may run short of fuel, air, reaction volume, scrubbing capacity or other critical items. Poor waste destruction can result, but damage to the TOX unit or even upstream process equipment is certainly possible.

The minimum operating controls needed are aimed at preventing thermal damage or explosions. A common design standard is provided by the National Fire Protection Association. With wastes which vary in flow or heating value, additional controls may be required for quick adjustment of fuel or air to maintain on-spec operation at all times.

High temperature operation requires special attention to the various refractories, stainless steels, paints and plastic used for construction, since an error in this area can quickly lead to catastrophic failure. Temperature control is always important, especially where catalyst is used to improve waste destruction, since excessive temperature can destroy catalyst quickly.

Refractories can be damaged by abrupt temperature changes. Slow startups (200°F temperature rise per hour) are typical. Ceramic fiber blanket refractory linings may be heated much more quickly. Periodic refractory inspection (usually once per year) is suggested, to allow repair of damage areas before they expand to create serious problems.

Some wastes form $SO_2$, HCl, or other acidic compounds when burned. These are normally harmless when hot, but areas where the combustion products can cool to 200 to 300°F may be subject to severe corrosion if the acid gas dewpoint is reached. In units with acidic combustion products, the TOX furnace should be protected with weather shielding or be located indoors. Wet scrubbers are often applied to TOX units to control the acid gases produced. If particulate is also present or is created through the combustion process, particulate control devices such as Venturi scrubbers, dry scrubbers, or wet electrostatic precipitators are often used.

The presence of suspended ash, dissolved salts, or other particulate-producing compounds may require special design to avoid blinding of waste heat recovery surfaces, and damage to refractory or excessive emissions.

# chapter 17

# Tray scrubbers

## Device type

Tray scrubbers are wet scrubbers that use a tray or multiple trays containing openings through which gas is accelerated to subsequently mix with scrubbing liquid, thereby enhancing particulate removal and gas absorption.

## Typical applications and uses

Tray scrubbers are used for the control of particulate greater than approximately 10 µm at loadings less than 1 to 2 grs/dscf and to absorb soluble gases. They are also often used for cooling gas streams and to subcool gases.

In years before the Clean Air Act (1970), tray scrubbers were used to control the emissions from lime kilns, lime sludge kilns, boilers, tanker inert gas systems, sludge incinerators, and similar applications where particulate and soluble gases (usually acidic gases) must be removed simultaneously. As the air pollution control regulations tightened, higher efficiency wet devices, such as Venturi scrubbers, and dry devices, such as baghouses, became more popular. Tray scrubbers continue to be used as gas cleaning and conditioning devices, often in concert with other devices.

Tray scrubbers are not used where large diameter particulate may plug the openings in the trays. They are also avoided where the loading of dust is high (above 2 grs/dscf) for the same reason. You often see tray scrubbers successfully used after primary particulate devices. For example, they are used for gas cooling and plume suppression after Venturi scrubbers on municipal sludge incinerators and after baghouses to remove $SO_2$ and HCl from waste incinerators.

## Operating principles

Tray scrubbers use one or more punched, perforated, drilled, or woven trays (usually flat) over which scrubbing liquid is passed. Gases containing particulate and absorbable gases are passed through these openings wherein

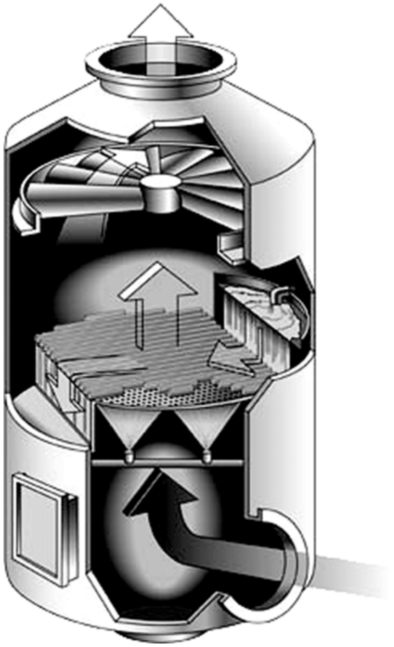

*Figure 17.1* Impingement tray scrubber (Sly, Inc.).

the gas is accelerated, increasing its kinetic energy. The gas impacts into this liquid passing over the tray and in doing so transfers its energy into the liquid causing a froth, or bubbling, turbulent zone of high surface area. The liquid typically passes over the tray, usually over a weir to stabilize the liquid depth, then descends through a downcomer to the next lowest tray or leaves the scrubber vessel via an external drain.

Figure 17.1 shows a tray scrubber in isometric view. It consists of a low level gas inlet, spray assembly to clean the face of the tray, a removable flanged grid assembly, a liquid inlet and distribution weir box, and internal downcomer, a vane type droplet eliminator (the turbine shaped device at the top), and the gas outlet at the top.

Some trays are equipped with baffles immediately opposite the tray holes or perforations. These are called *impingement tray scrubbers* because the gas impinges on the baffles. These type trays generally offer greater particulate removal given the impaction action. Figure 17.2 shows the basic components of a tray. Item *A* is the impingement baffle (sometimes called a strong back). One of the holes is shown under item *B*, the face of the tray is item *C*, and the tray itself is item *D*.

The downcomer of a customized tray is shown in Figure 17.3. The downcomer baffle serves to prevent the gas flow from bypassing the tray by going up the downcomer. Obviously, the liquid depth in the downcomer seal leg must be deep enough to provide a suitable liquid seal.

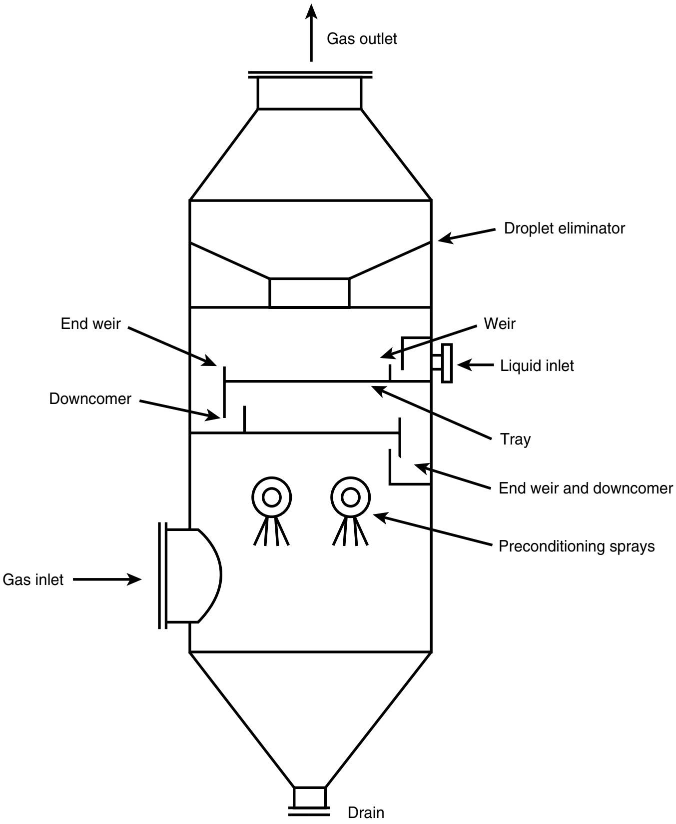

*Figure 17.2* Tray scrubber basic components.

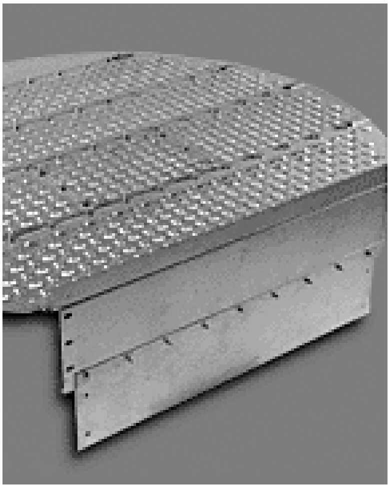

*Figure 17.3* Tray with end weir and downcomer (Koch-Glitsch, Inc.).

Trays with larger openings are called *sieve tray scrubbers* and are used primarily for gas absorption. If the gas velocity is insufficient to keep the liquid on top of the tray, the liquid can drain or weep through the trays. These types are called *weeping sieve tray scrubbers*.

If you read Chapter 14, you probably noticed that some modern flue gas desulfurization systems use a hybrid tray/spray scrubbers to reduce the liquid rate requirements, thereby lowering the pumping horsepower and operating cost. These trays are very open, weeping type designs that afford some momentary hold-up of scrubbing liquid. This increases the liquid loading per unit volume at the tray and enhances mass transfer in part by reducing the diffusion distance from the gas molecule to the droplet. The stirring of the liquid also improves mass transfer. The liquid gets to the tray, however, using spray nozzles. Eliminate the spray nozzles, and increase the gas velocity further, and you get a fluidized bed scrubber. Now introduce a novel way to stabilize this fluidized bed, and you get the patented ROTA-BED™ scrubber.

Another variety of the tray scrubber is the bubble cap tray scrubber. These trays have numerous modules called bubble caps that divert the gas into the liquid to create the enhanced surface area. The tray openings are generally larger than in a conventional perforated tray; therefore, the bubble cap tray is more plugging resistant. Figure 17.4 depicts a bubble cap tray assembly. These individual caps are often welded to the tray surface to provide secure attachment. Because the hole sizes are greater, the tray strength is somewhat reduced therefore these trays are often supported from below. The result is a very sturdy and efficient mass transfer surface.

Some trays are equipped with movable discs that are influenced by the motion of the gas onto their surface. These designs are called *valve tray scrubbers* and the trays are called valve trays because the discs function as valves. As the gas flow varies, these discs or valves automatically compensate within their design range. This feature can be of great value if the gas density or flow rate varies significantly.

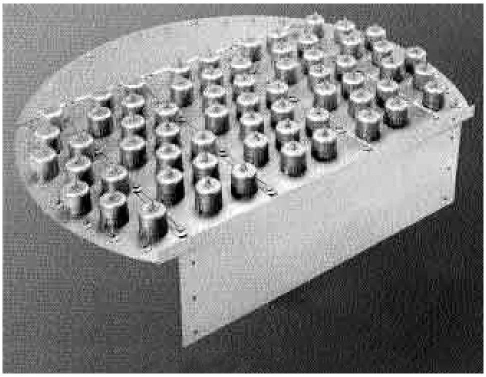

***Figure 17.4*** Bubble cap tray (Rauschert Industries, Inc.).

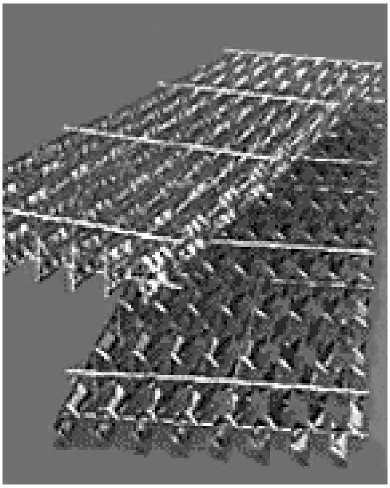

***Figure 17.5*** Grid type packing tray (Koch-Glitsch, Inc.).

It can be argued that a cross between a tray and a packed tower is the structured grid scrubber. It uses modules or sections of packing in the form of grids. These grids are stacked in the tower and are irrigated with scrubbing liquid. The structured grid surface extends (enlarges) the liquid surface thereby improving mass transfer. Figure 17.5 shows a popular type of structured packing. These devices are operated much like a packed tower yet the contact elements (the structured grid) are installed and replaced in modules.

## *Primary mechanism used*

For absorption of gases, tray type scrubbers use the high-velocity jets formed as the gas passes through the tray openings to shear the scrubbing liquid into a high surface area dispersion that enhances mass transfer.

For particulate control, the primary mechanism is impaction.

## *Design basics*

The perforations in tray scrubbers can range from approximately 1/8 to 1 inch. If the gas flow is sufficient, any of these type scrubbers will flood, or operate so that the liquid cannot descend. Designing them, at least in part, revolves around operating the scrubber below this flooding velocity. In contrast, fluidized bed scrubbers operate at higher velocities nearly at flooding speeds.

The typical tray scrubber uses a vessel velocity of approximately 8 to 10 ft/sec vertical velocity (free space). The perforation sizes and spacing can vary. The number of holes will vary the net open area. The following chart shows the approximate open area of some tray designs:

| Perforations | Open Area (%) | Dry Pressure Drop |
|---|---|---|
| 1/4″ on 3/8″ ctrs | 40 | 1.25–1.75″ w.c. |
| 3/16″ on 3/8″ ctrs | 22 | 1.0–1.5 |
| 1/16″ on 3/16″ ctrs | 11 | 1.5 |
| 1/2″ on 1 3/32″″ ctrs | 22 | 1.5–2.0 |

Inlet weirs are often 3 to 4 inches high and the liquid enters free flow (i.e., very low pressure drop). The weirs are installed so that the weirs are level. This is very important to keep a uniform liquid level across the weir since the pressure drop (and resulting performance) is a function of the dry pressure drop of the tray plus the pressure drop associated with the liquid. The liquid usually adds 0.25 to 1 inch water column pressure drop, per tray, added to the dry grid pressure drop above. The liquid static depth on the tray, however, may be higher than the indicated pressure drop. This occurs because the turbulent mixture above the tray becomes aerated and therefore has a lower density than the static liquid.

Liquid downcomers are usually sized for approximately 80 to 100 gpm per running foot of weir. This keeps the liquid level uniform across the tray. This brings up an interesting point. If the liquid rate must be higher (given the loading of the contaminant or the cooling duty), the tray scrubber can be configured to have the liquid enter down the center of the tray and have the liquid flow to either side. The latter type design is called a split flow or dual flow type tray. Curved or partial circumferential weirs can be used to allow the proper liquid flow rate.

The volumetric flow rate of liquid in the downcomer is usually limited to about 2 ft/sec, particularly if an upper tray discharges into a lower tray. High drain velocities can cause disrupted liquid flow to the tray and a loss in efficiency.

Single trays can be used but most often the trays are installed in quadrants so that the trays may be removed through manholes. The trays are bolted down or are held in place by wedges and keeper plates that hold them in place.

In each of these designs, the vendors have developed efficiency parameters through experience or testing that equates the performance of the tray as it relates to a theoretical tray (See Chapter 1). Once the number of transfer units required are determined, the number of tray stages can be determined by dividing the relative efficiency per tray into the required number of transfer units required. A typical real tray has an efficiency of approximately 80% of a theoretically perfect tray. Therefore, a typical tray produces about 0.8 transfer units (the actual number varies considerably by tray design).

The vendors of these trays and tray scrubbers can match the tray design to your performance requirements. Although textbook design may reveal how many tray stages you may need, it is best to contact the tray vendors for a proper evaluation.

## *Operating suggestions*

Because tray scrubbers use perforated plates or small openings, care should be taken when applying them to high (above 5 grs/dscf) dust-loading applications. In these circumstances, either a prescrubber (such as a Venturi scrubber) is used or the lowest tray is sprayed from below to help keep it clean. Fluidized bed type scrubbers can often be used instead because they have larger gas ports and are more resistant to plugging. Similarly, tray scrubbers generally operate best at under 1% total suspended solids in the recycle liquid. If you must run at elevated solids, bring that to the attention of the scrubber designer so you do not create a maintenance and operations headache.

Most tray scrubbers use trays configured in removable plate form. These are usually sized so that one or two people can handle them (when the trays are clean). When designing the scrubber installation area, space should be allowed to remove the plates safely. Extra wide access platforms allow space to place the trays after they are removed and can be a handy addition to any installation.

Vessel access doors are frequently too small, requiring the tray panel to be tilted on a diagonal to remove it. If at all possible, the door width should be at least the width of the tray. If you ask for this, most vendors can accommodate you.

Downcomers and weirs, if used, are a source of plugging and buildup in many applications. Any internal inspection should include a thorough checking of the weirs and downcomers. These areas should be cleaned and repaired as required because they are an integral part of the tray operation. Plugged downcomers can cause improper liquid distribution on the subsequent tray resulting in a reduction in efficiency. Worn, corroded, or plugged weirs produce improper liquid distribution on the tray also reducing efficiency.

If upon inspection of a tray one notices an uneven distribution of wear or buildup, it could be caused by an insufficient liquid depth on the tray. Another telltale sign is low (below designer's setpoint) pressure drop at design flow rates. It is often possible to add an end weir (or increase the height of an existing one) to increase the liquid retention depth. This will also increase the pressure drop on the tray.

The single most important aspect of tray scrubber installations is that the tray is horizontal. Liquid on the tray is inherently trying to stay level. If the tray is not level, the liquid depth can vary across the tray. This can cause a resistance to flow imbalance, producing areas of high velocity and poor contact. When the scrubber is installed and at service periods thereafter, checks should be made to ensure that the trays are level or in accordance with the vendor's specifications.

If you have performance problems with tray scrubbers, various vendors and some consulting firms have analytical equipment to inspect the scrubber and isolate the problem. These devices look for variation in gas and liquid flow patterns. Once these patterns are known, corrective measures can be taken.

# *chapter 18*

# *Vane type scrubbers*

## *Device type*

Vane type scrubbers are wet scrubbers that use one or more stationary vanes through which or within which the contaminant gas streams mix with scrubbing liquid. There are many innovative designs within this category. They are used to remove particulate in the 5 μm and larger size range and provide moderate gas absorption capability. These scrubbers are considered to be low to medium energy input devices and find themselves in use where the particulate loading is under 4 to 5 grs/dscf and the particle size is 10 μm or above.

There are a number of very interesting and efficient vane type scrubbers currently being provided by vendors worldwide.

## *Typical applications*

Vane type scrubbers are often found in use on rotary dryers, grinders, mullers, and similar devices producing relatively large particulate. At higher pressure drops (above 10–15 inches water column), cage type units have been used on non-ferrous metals remelt furnaces to remove residual metallic dusts, etc.

There are hundreds of vane type scrubbers in daily use. Some, in recent years, have been followed by wet electrostatic precipitators or other devices for enhanced capture of submicron sized particulate.

If the gas stream contains sticky particulate, certain vane designs can rapidly plug. Care must be taken to fully and constantly wet all surfaces and this can be difficult to accomplish. Given that they require centrifugal action, the gas speed in this type scrubber is of importance. Turndown ratios of approximately 25% are common, below which point some reduction in efficiency may occur.

## *Operating principles*

Vane type scrubbers basically use a multiplicity of Venturi scrubber sections to accelerate the gas stream causing liquid that is dispersed on the vanes to shear into tiny target droplets. In addition, the designs use centrifugal force to throw the gas stream toward (in most cases) the vessel wall. In some designs, the vanes direct the dispersion of droplets inward into a high droplet density cloud that is configured to maximize impaction and interception.

## *Primary mechanisms used*

Centrifugal and impaction forces are most commonly applied in vane type scrubbers. The vanes may be configured in a near horizontal plane (with vanes oriented much like a gas turbine blade) or as a vertical cage of vanes similar in appearance to a squirrel cage blower impeller. Other designs use various vane combinations but share these primary separation mechanisms.

The vane blades are typically close together forming a multiplicity of Venturis and are angled to deflect the gas stream in a way that increases its rotational motion either outward toward the vessel wall, or inward into a confined spray zone. These blade groups are often sprayed with the scrubbing solution or the liquid is allowed to cascade onto the vane surface. Depending on the orientation of the vane group, the liquid may produce a froth somewhat like a fluidized bed scrubber. A significant difference between the contact zones is that the froth in a vane type scrubber usually proceeds from the vane area and is thrown outward against the vessel wall. In fluidized bed scrubbers, the froth or fluidized zone descends back directly into the gas path and helps to create and maintain the froth zone.

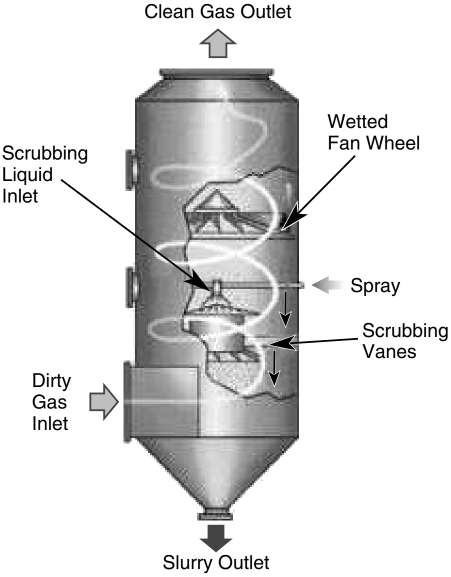

***Figure 18.1*** Mikrovane scrubber (Hokosawa Mikropul).

Figure 18.1 shows a vane type scrubber wherein the vane group is horizontal. The gas usually enters tangential below this vane group to impart a cyclonic motion and provide some centrifugal separation as in a cyclone collector. The gases then move vertically into the vane group area where the angle of attack of the vanes helps to impart greater centrifugal force. The reduction in open area given the existence of the vanes tends to accelerate the gas speed. When scrubbing liquid is administered to this zone, impaction, and shearing forces are applied as well. The spinning action of the gas tends to throw the liquid/gas mixture towards the vessel wall where the distance between the droplets created and the gas is reduced. This action helps to increase particulate capture.

A popular and clever vertical cage type vane scrubber is made by Entoleter, Inc. (Hamden, CT). Figure 18.2 shows this vane cage as viewed from above. The gas stream enters tangentially and centrifugal force throws the larger particulate to the vessel wall where it impacts and is flushed down to the sump. The gases then follow a decreasing radius until they reach the vane cage. The slots in the vane cage function as a multiplicity of Venturi scrubber throats. When scrubbing liquid is injected into this swirling stream, the tangential motion tends to spin the liquid at an angle back outward into the path of the gas stream. This action increases the relative velocity between the gas and liquid and improves impaction and separation.

A spray cloud is formed in the vane cage zone as diagrammed in Figure 18.3. You can see that the spinning action tries to throw the liquid outward but the gas is being directed inward by the vanes. A droplet cloud is thus formed and these droplets serve as targets for particulate capture much as in a Venturi scrubber.

Vane type scrubbers are often found on rotary and tray type dryers such as found in the grain drying industry. Their compact size makes them attractive for roof mounting if space is a problem. As seen in Figure 18.4, a pair of vane type scrubbers are seen roof mounted with the exhaust stacks mounted directly on top of the scrubber's gas outlet.

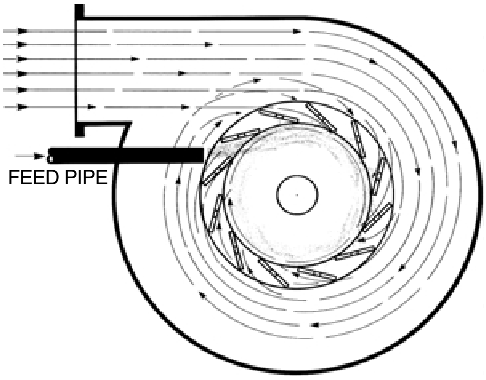

*Figure 18.2* Centrifield scrubber (Entoleter, Inc.).

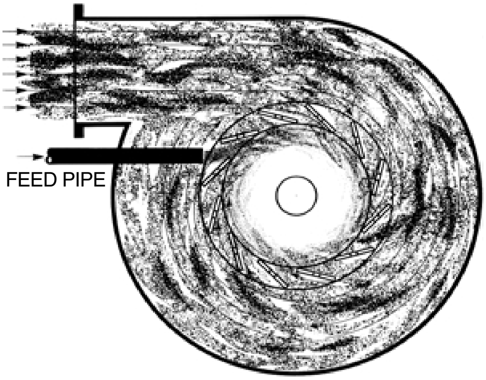

*Figure 18.3* Centrifield cloud zone (Entoleter, Inc.).

*Figure 18.4* Vane type scrubber installation (Entoleter, Inc.).

When these type scrubbers have a relatively short gas/liquid contact time their gas absorption can suffer. To improve gas absorption, a vane type scrubber can often be combined with a gas absorber such as a packed tower as seen in Figure 18.5. A ring and cone trap is used to separate the two stages. The cone can be seen just below the packing section. This type design can also be used to separate 10 μm particulate in the lower stage followed by gas absorption in the upper stage where both contaminants are present at the same time.

The following figure shows a vane or centrifugal type scrubber in fabrication. The turbine-like vanes can clearly be seen. Note, also, the central sleeve from which the vanes radiate. Many vane type scrubbers use a center disc or sleeve to act as a vortex finder that stabilizes the rotating gas pattern. When the vane is used as a droplet eliminator on larger units, this center sleeve often does double duty as an access manway to permit passage above or below the vane deck.

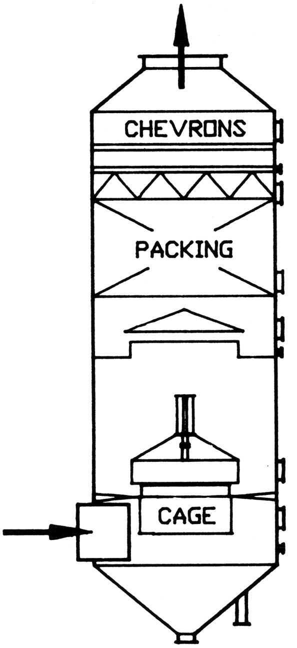

*Figure 18.5* Vane scrubber plus packed bed (Entoleter, Inc.).

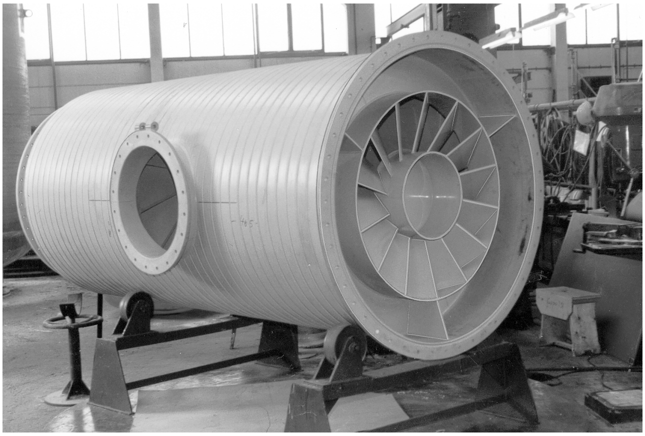

*Figure 18.6* Vane type scrubber in fabrication (Trema Verfahrenstechnik GmbH).

## *Design basics*

Vane type scrubbers can operate at pressure drops of less than 3 to 4 inches water column to over 35 inches water column for the vertical cage type designs. They generally make good use of the scrubbing liquid and operate at low liquid to gas ratios of 2 to 10 gallons/1000 acfm treated. Higher L/G ratios are used where the dust loading exceeds approximately 3 to 5 grs/dscf.

The vertical vessel velocities are similar to other cyclonic type wet scrubbers, that is, about 8 to 12 ft/sec vertical velocity. Gas inlet speeds range from 35 to 55 ft/sec, but these speeds are often increased once inside the vessel to provide first stage cyclonic separation. Gas outlet speeds are 40 to 55 ft/sec if no stack is used and approximately 30 to 40 ft/sec if a stack is in place.

These scrubbers usually require a disengaging space above the vane area because the gas stream is spinning and the droplets require some time to separate. This disengaging zone varies by manufacturer but is typically $^1/_2$ to 1 vessel diameter above the vane area. More disengaging zone is needed where horizontally oriented vanes are used because the gas flow tends to take an upward angular spiral rather than a more flat spin as in the vane cage type.

## *Operating suggestions*

Vane type scrubbers encompass a number of proprietary designs. It is therefore best to consult with the vendor regarding each specific application.

If the gas stream contains over 20% submicron particulate, vane type scrubbers may not be able to meet current air emissions regulations. The scrubber vendor should be able to predict the scrubber performance from a particle size analysis. When in doubt, perform or acquire an aerodynamic diameter particle size analysis for your application and submit it to the scrubber vendor for review. Given sufficiently large particulate, a vane type scrubber can provide economical performance versus medium to low energy competition such as Venturi scrubbers. Savings can accrue from reduced scrubbing liquid requirements and a more compact installation. Given the extensive use of internals in these designs, the capital cost may be higher than competitive designs because more material and fabrication labor time may be needed.

Given the generally low L/G ratios at which these designs operate, liquid distribution is critical. If spray distributors are used, strainers are recommended to reduce nozzle plugging. Upon internal inspection, care should be taken to observe the spray impact patterns and make adjustments to the nozzle spray patterns or angles to provide complete liquid coverage. Telltale patterns can usually be easily seen on the vanes.

Because the vanes are inside the vessel, they can be attacked by corrosion from both sides. When selecting materials of construction, one should take into account that the vanes should have sufficient thickness for double-sided corrosion. Too often, the vanes are thin and localized attack can shorten their effective life. If the application is corrosive, remember that any vanes inside can be attacked from both sides; therefore, your corrosion allowance should be doubled for interior components.

If the scrubber uses a lower stage primary cyclonic knock out section with central drain fitting, make certain that the scrubber is equipped with vortex breakers to stop the liquid from spinning so that the liquid may drain smoothly.

# chapter 19

# Venturi scrubbers

## Device type

Venturi scrubbers are wet scrubbers that use a change in gas velocity to shear liquid streams (usually water) into tiny target droplets into which particulate and soluble gases are transferred. They are considered as a workhorse of the available air pollution control technologies given their low capital cost, reliability, and effectiveness on a variety of applications. They tend to use more energy than alternative designs particularly on applications treating over 50,000 acfm of gases. Venturi scrubbers are used where the collected product can be handled wet. They are often used on processes, such as calciners and dryers, wherein the blowdown from the scrubber can be returned to a wet portion of the process. They can also handle the heavy dust loadings, which can occur from these sources. Venturi scrubbers can ingest dust loadings of over 30 grs/dscf if designed correctly. Figure 19.1 shows a rectangular throat Venturi scrubber, a workhorse of the wet scrubbing industry.

## Typical applications

Venturi scrubbers are best used to remove particulate 0.6 µm aerodynamic diameter and larger where the gas flow is from 1 to 500,000 acfm if the particles are 10 µm and larger, and from 1 to 50,000 acfm if the particles are 0.6 µm and larger. They have been successfully used, however, to remove submicron particulate at pressure drops of up to about 60 inches water column.

If the gas stream has primarily submicron particulate (say from a hazardous waste incinerator), a condensing wet scrubbing system, or a wet electrostatic precipitator, or similar lower energy input system might be used instead.

There are literally hundreds of applications, however, in which the particulate is 1 to 20 µm diameter where the Venturi scrubber provides excellent results. The result is that thousands of Venturi scrubbers are in daily use throughout the world.

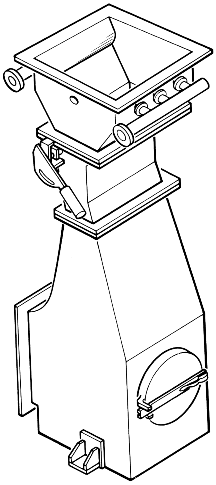

***Figure 19.1*** Venturi scrubber (Bionomic Industries Inc.).

Rectangular throat Venturis are commonly used on product dryers and calciners where there is a wet stage. Mineral lime kilns and lime sludge kilns (such as in the recausticizing section of a Kraft pulp mill) often use Venturi scrubbers. Agricultural product rotary dryers are often equipped with primary product collecting cyclones, which are followed by Venturi scrubbers. Grinding. milling (wet), mulling, and other operations that generate dust often use Venturi scrubbers for particulate control. Venturis on mineral lime kilns usually operate a 10 to 16 inch water column pressure drop and units on lime sludge kilns are designed to run at 22 to 26 inches water column and sometimes higher if the lime mud being burned is high in sodium.

Boilers such as those firing bagasse or bark are often equipped with Venturi scrubbers. The boiler usually incorporates a primary knockout zone and cyclone collector followed by a medium energy Venturi (approximately 10 to 15 inches water column).

Some metallurgic furnaces are equipped with higher energy Venturi scrubbers because the particles generated are smaller.

Annular Venturi scrubbers are used when the gas volume exceeds about 25,000 acfm. The reason for this is that designers like to maintain a throat width of 4 to 6 inches maximum. Sometimes a rectangular throat of this size would be too long to suit the gas inlet. The throat is therefore wrapped around to form the annular type. These designs are often seen on waste burning boilers, larger kilns and calciners, and large capacity dryers. Figure 19.2 shows an annular Venturi scrubber designed and built by TREMA in Europe. Note the ring-shaped liquid header at the top and the throat positioner at the bottom.

Eductor Venturi scrubbers are used where the designer wants to eliminate the use of a fan and is willing to use more liquid at higher pressure instead. These conditions might prevail where space is limited, the source

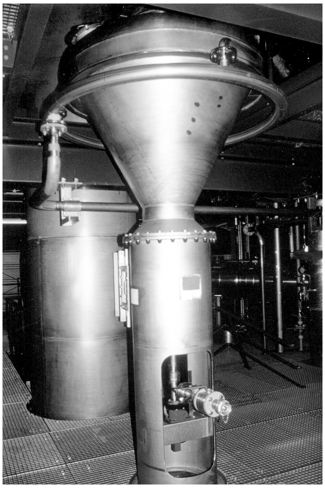

*Figure 19.2* Annular Venturi scrubber (Trema Verfahrenstechnik GmbH).

may be explosive (a fan wheel spark could cause a problem) or where the application requires simplicity. Eductors are used on tank vent systems, on tools used in the manufacture of semiconductor products, on odor control systems where fan noise may be an issue, and on emergency gas control systems (such as for chlorine control).

Reverse jet scrubbers are used on these same applications with primary focus on applications where the total energy input is an issue. They use a lower static pressure fan but a higher pressure pump, but have a lower total energy input in many cases.

## *Operating principles*

Venturi scrubbers all operate by creating a dispersion of closely packed target droplets into which the contaminant particulate is impacted. The droplet dispersion may be created by a high differential velocity between the scrubbing liquid and the gas resulting in a droplet-forming shearing effect. Other designs use pump hydraulic pressure and spray nozzles to generate the droplets. The overall intent is to impact the smaller particle into the larger droplet, which is more easily separated from the carrying gas stream inertially.

Once the particulate is impacted into the droplet, the droplet is separated from the gas stream using centrifugal force or interception on a waveform (chevron), baffle, or similar device.

## *Primary mechanisms used*

Impaction is the primary collection mechanism in Venturi scrubbers (see Chapter 1). Interception and diffusion also come into play particularly at pressure drops above 10 to 15 inches water column where the smaller droplet size and droplet proximity enhance such capture mechanisms.

For gas absorption, diffusion is considered to be the primary method of capture. Venturi scrubbers can sometimes achieve 0.5 to 1.0 transfer units, although the residence time in the Venturi throat is very short (typically milliseconds).

## *Design basics*

Typical Venturi scrubber types are:

1. Rectangular throat designs, both fixed throat and adjustable.
2. Annular type designs wherein the throat zone is an annular gap. This gap can be adjusted by moving the center body plumb-bob up and down to vary the open area and, therefore, the pressure drop.
3. Eductor Venturis wherein the momentum of pressurized liquid introduced into the device both provides mass transfer and provides motive force to the gas.
4. Reverse jet designs wherein the liquid is injected countercurrent to the gas flow. These designs force the particle into a nearly head-on collision with the liquid spray to enhance the application of the spray energy.
5. Collision type designs split the gas streams and impacts them nearly head-on to enhance momentum transfer from gas to particle.
6. Some Venturi scrubbers are made from parallel tubes or pipes as in the multi-Venturi (see below). These pipes may be oriented horizontally, vertically or on an inclined angle. The scrubbing liquid is usually sprayed on the tubes or pipes. The slots formed between the pipes for the Venturi shape.

Gas inlet velocities for all of these designs are generally the same as the ductwork conveying velocities, that is, 45 to 60 ft/sec. The Venturi section outlet duct is usually sized for a similar velocity to reduce pressure losses through velocity changes.

The liquid rate for gas velocity atomized Venturis (using fans) is 5 to 30 gpm/1000 acfm treated with 5 to 10 gallons/1000 acfm being common. The liquid-to-gas ratio is increased as the inlet dust loading is increased. Liquid pressures are under 15 psig with 5 to 10 psig being common. Hydraulically pressurized (spray nozzle type) Venturi scrubbers may use lower liquid rates; however, it is the dust loading that truly dictates the liquid rate. The greater the particulate loading, the higher the liquid rate. Lime kilns, with inlet dust loadings of over 20 grs/dscf, may use 15 to 20 gallons/1000 acfm, whereas a dryer equipped with a product recovery cyclone may use only 4 to 8 gallons/1000 acfm. Figure 19.3 shows the manner in which the L/G increases with increasing dust loading.

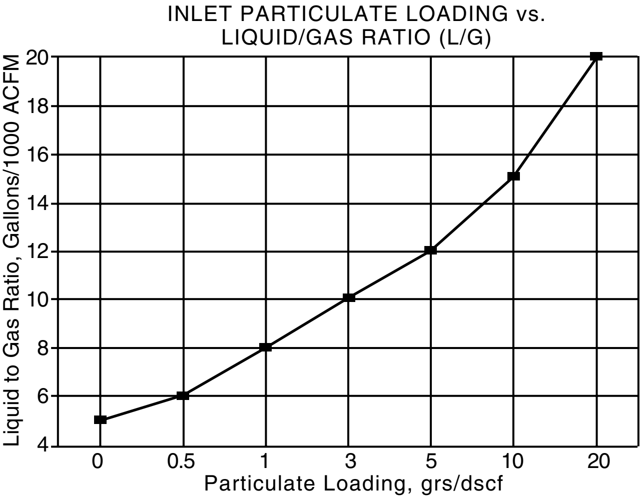

*Figure 19.3* Liquid to gas ratio (L/G) vs. loading.

Various researchers have derived equations based on fluid mechanics to predict the pressure drop of a Venturi scrubber. Formulas by Howard Hesketh were presented in the book *Wet Scrubbers* (Technomic/CRC Publishers) and in other publications. Seymour Calvert, Shui-Chow Yung, and others produced useful equations that also predict the pressure drop. Venturi scrubber vendors use these predictions (often with some modification to suit their particular designs) to size the Venturi throat zone. It is therefore suggested that vendors be relied on to make Venturi throat parameter selections.

Suspended solids contents of 6 to 8% and higher are not uncommon, although many units operate at 2 to 4% suspended solids. This is significantly higher than many other wet scrubber designs (such as tray scrubbers). Designs using nozzles are typically limited to approximately 2 to 4% suspended solids; otherwise, nozzle plugging can occur.

Eductor type Venturi designs operate at much higher liquid rates and pressures because the liquid is also being used to create a draft. These units run at 20 to 50 gallons/1000 acfm with header pressures of 30 to 60 psig being common.

Reverse jet designs have liquid rates in the range between the gas velocity atomized designs and the eductors. The liquid rate can be 50 to 100 gallons/1000 acfm or as low as 3 to 4 gallons/1000 acfm, depending on the dust loading and application.

Throat velocities vary from 70 to 90 ft/sec to over 400 ft/sec in high energy designs.

Cyclonic separator vertical velocities range from 8 ft/sec to 10 to 12 ft/sec on larger systems (separators over 9 to 10 ft diameter).

The removal efficiency of a Venturi scrubber is a function of its pressure drop. Vendors have developed pressure drop versus efficiency curves as shown in Figure 19.4. Knowing the aerodynamic diameter of the particle (as

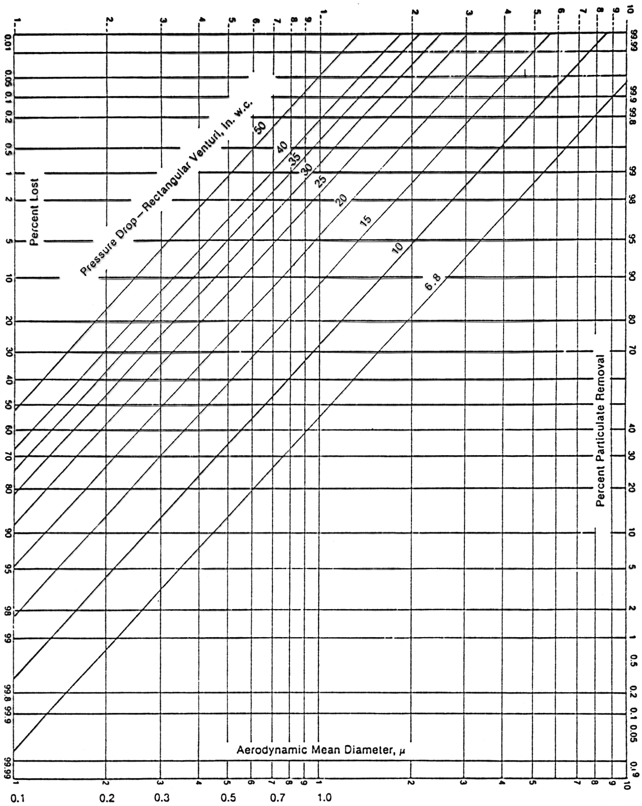

***Figure 19.4*** Composite fractional efficiency curve. (From Schifftner, K. and Hesketh, H., *Wet Scrubbers*, 2nd ed., Technomic Publishers, Lancaster, PA, 1996.)

determined by a cascade impactor), the designer can select the pressure drop at which the Venturi must operate. Often, removal guarantees can only be provided based on a known particle size distribution.

Let's look at various Venturi scrubber designs.

A rendering in cut-away of an annular Venturi is shown in Figure 19.5.

The gas inlet in this sketch is at the top and the gas outlet is at the lower left. The conical device in the cutaway portion is the plumb-bob. It defines the annular gap between itself and the tapered vessel wall. The slope or pitch angle of the plumb-bob allows the throat area to be adjusted as the plumb-bob moves up (to increase pressure drop) or down (to decrease pressure drop). The actuation is usually accomplished by mounting the plumb-bob on a pipe resulting in what looks like an umbrella. The pipe extends down to the base of the Venturi and terminates outside the vessel. Moving this pipe or shaft up or down moves the plumb-bob. A packed seal is incorporated surrounding the shaft to prevent leakage. These throats can be automated by using an electric or pneumatic jackscrew positioner to move the pipe based on pressure drop or draft signal.

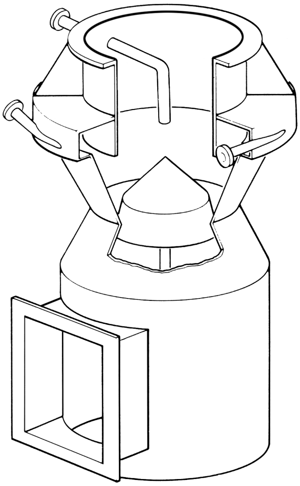

*Figure 19.5* Annular Venturi (Bionomic Industries Inc.).

Eductors, shown above, operate by administering a jet of liquid (usually water) into the throat zone in the direction of gas travel. An energy exchange occurs between the liquid and gas. The high velocity and therefore kinetic energy of the liquid is exchanged with the surrounding gas, accelerating the gas. In part, the gas is also entrapped between droplet arrays and is pulled

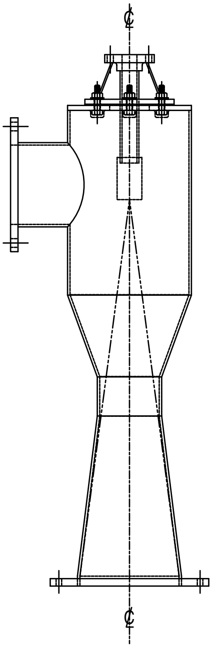

*Figure 19.6* Eductor type Venturi (Bionomic Industries Inc.).

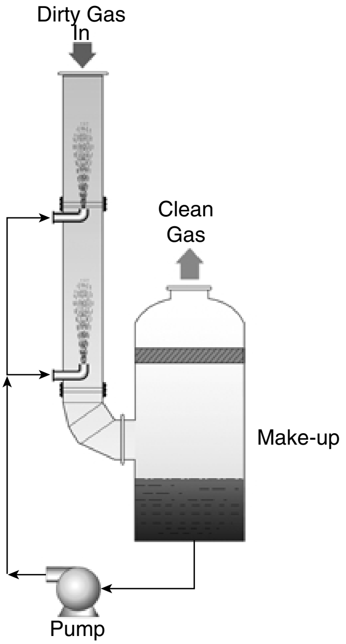

*Figure 19.7* Reverse jet or Dyna Wave Venturi (Monsanto Enviro-Chem Systems, Inc.).

through the unit. The diverging section helps to enhance the effect by allowing the droplets to slow down and achieve greater energy transfer.

Eductors can actually produce a draft at the eductor inlet without the use of an external gas moving device (such as a fan). They are therefore often used where a rotating device such as a fan would not be compatible with the process, or space does not allow its installation. They are often used for small gas flows such as ventilating tanks or collecting dopant gases from semiconductor manufacturing. The mechanical efficiency is quite low, however, so they are not commonly used on high volume (over 5000 acfm) without a supplemental fan.

The Dyna-Wave scrubber (Figure 19.7) improves impaction by spraying the scrubbing liquid countercurrent into the gas stream. The velocity of the liquid is directed into the gas stream so the differential velocity is much higher than in a conventional Venturi scrubber. This allows less gas side pressure drop to be used and can save horsepower by shifting the energy input duty from the low efficiency fan to the higher efficiency pump.

A froth is created where the liquid reaches zero velocity and then turns 180 degrees and moves concurrent with the gas. The particulate in the gas stream is impacted directly into this froth zone and is removed. Dyna-Wave scrubbers have been used on a large number of particulate scrubbing applications. The resulting concurrent discharge of the liquid limits, to some extent, their gas absorption capability. In those cases, they are used in stages or are combined with absorbers such as packed towers.

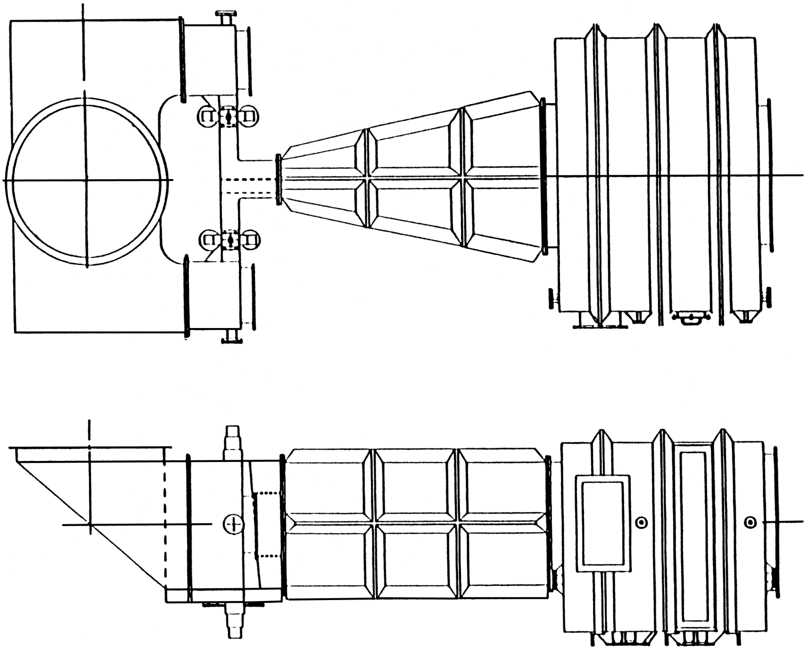

*Figure 19.8* Collision scrubber (Monsanto Enviro-Chem Systems, Inc.).

The collision scrubber shown in Figure 19.8 was developed by Seymour Calvert and has been used to collect submicron fumes from hazardous waste incinerators and other difficult applications. In this case, the inlet gas stream is split into two equal streams, is turned 90 degrees and is impacted head on. As in the Dyna-Wave, the goal is to maximize the differential in speed between the particle carried by the gas and the liquid. These type Venturis can also be made to be adjustable through the use of a movable T section mounted where the two throats converge.

The multi-Venturi shown in Figure 19.9 uses closely spaced rods or pipes that create long Venturi slots. It is known that an excessive throat width in a Venturi scrubber can result in a loss in efficiency. For that reason, and others, multiple Venturis are used. The throat width is reduced to a group of narrow slots. Although the total open throat area is nearly the same as in a conventional Venturi, the throat width is but a fraction of its conventional cousin. The wetted surface of the multi-Venturi is also greater. Some say that the increased wetted surface improves particulate removal. It does increase the cost, however, particularly if exotic alloys are used in its construction.

For all of the designs, a separating device is used after the Venturi to remove the droplets that are now carrying the collected particles and absorbed gases. A cyclonic separator as shown in Figure 19.10 is a very common application. Centrifugal force is used to spin the liquid droplets from the gas stream. Sometimes a packed tower or mesh pad type separator

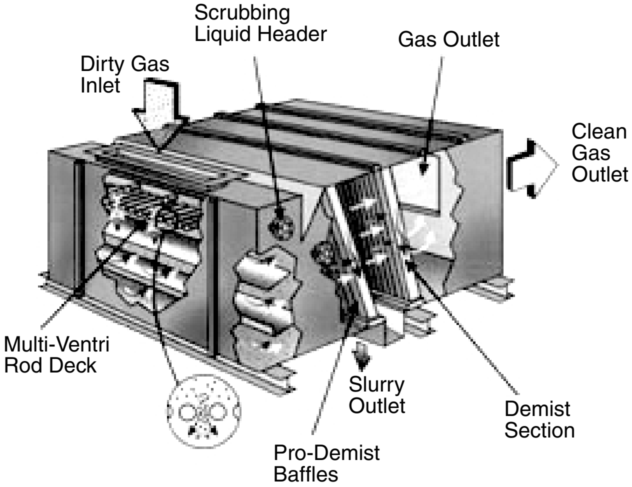

*Figure 19.9* Multi-Venturi ( Hosokawa Mikropul).

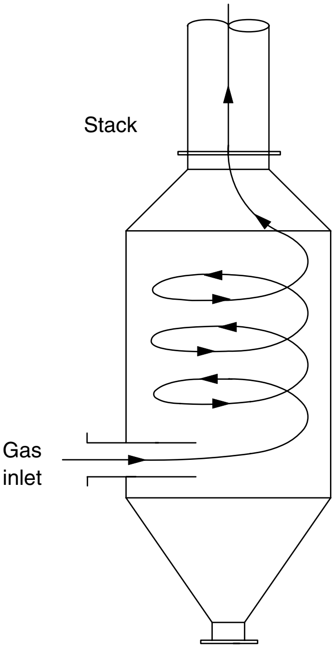

*Figure 19.10* Cyclonic separator (Bionomic Industries Inc.).

follows the Venturi (this is common for eductors, which may precede or be followed by packed towers for enhanced gas absorption).

Crossflow type droplet eliminators as shown in Figure 19.11 are also used. These use waveform type droplet eliminators (chevrons) that provide a surface upon which the droplets impact, accumulate, and drain. If the

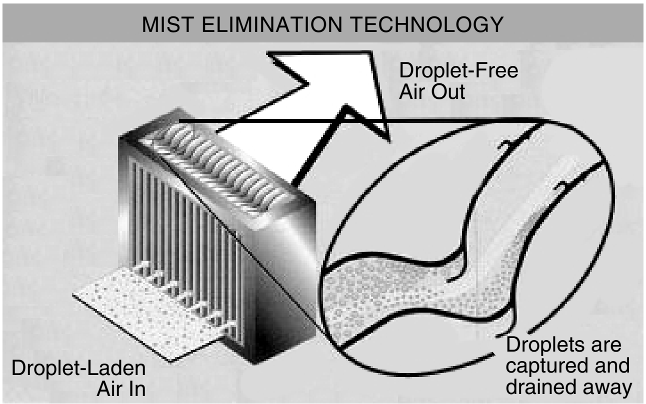

*Figure 19.11* Crossflow droplet eliminator (Munters Corp.).

Venturi operates at over 35 inches water column, many vendors like to use cross-flow droplet eliminators rather than cyclonic designs because the former offers greater small droplet removal than the latter. Without proper droplet control, the liquid could be entrained to the stack testing equipment and the particulate those droplets contain be counted as emissions. Droplet separation is critical.

## *Operating/application suggestions*

There are literally thousands of Venturi scrubbers in operation worldwide. General tricks of the trade include sending the scrubbing liquid to an elevation above the Venturi and letting the liquid drain from the bottom of the header into the Venturi if high solids loadings must be handled. Adjustable throats are of great benefit in setting the scrubber pressure drop and tuning the scrubber to the source. These adjustable throats are sometimes automated with a feedback loop to a differential pressure or draft controller that allows the pressure drop to follow a process setpoint or an emissions permit parameter.

If the gas stream contains abrasive particles, wear plates are often used in the upper section (approach section), in the throat, and in the elbow area where the gases turn 90 degrees to enter the separator. These elbows may also be designed to be flooded with water, that is, flooded elbow to use the water surface as an abrasion resistant barrier. The conventional elbow is called a sweep elbow because it sweeps the gases toward the separator.

So-called horizontal Venturi scrubbers are usually inclined on an angle to allow liquid drainage. The gas and liquid tend to take a downward arc trajectory that limits performance so horizontal Venturis are rare.

Separators are sometimes mounted on top of open surface decant tanks on applications where the collected product may float (such as bark char, bagasse fines, carbon black, etc.). Other units are operated “water-once-through” to flush high dust loadings to a remotely mounted clarifier.

Other systems use a product recovery liquid cyclone in the scrubber recirculation loop. These are sometimes used on foundry cupola or precious metals recovery applications. The underflow from the cyclone is sent to product recovery and the clears go to the Venturi headers.

If the recycle liquid contains solids (such as limestone), the liquid distributor to the Venturi is often mounted above the injection point so that the solids are flushed out of the bottom of the header thereby reducing buildup and plugging. For clean liquids, the headers often discharge from the top so that the header is always full and the liquid is evenly distributed.

The simple configuration and reliability of the Venturi scrubber makes it a true air pollution control workhorse.

## chapter 20

# Wet electrostatic precipitators*

### Device type

The wet electrostatic precipitator (WESP) is a mechanical device that uses primarily electrostatic forces to separate particulate from gas streams. The collecting surfaces are periodically cleaned using water or other suitable conductive flushing liquid; thus, the name wet electrostatic precipitator.

The basic components of a WESP are shown in Figure 20.1. They consist of either a low level (shown) or high level gas inlet, collecting tubes, mast type electrodes mounted on a grid or frame, a high voltage insulator section, an air-purged insulator compartment to prevent particulate from coating the high voltage insulator section, a high voltage power supply (transformer/rectifier set), and a gas outlet.

The designs also include various types of cleaning or irrigation systems that are used to purge the tubes of captured particulate. These purge systems may include fog nozzles, spray nozzles, or weir type irrigation systems.

### Typical applications and uses

WESPs are frequently used to collect submicron particulate that arises from combustion, drying operations, process chemical production, and similar sources. They are also used as polishing devices to reduce particulate loadings to extremely low levels. They are generally used where the inlet loading of particulate is under 0.5 grs/dscf and where corrosive gases may be present. They also excel where the particulate is sticky but can be water flushed. They often replace fiberbed filters or similar coalescing devices where solid particulate is present that could plug the fiberbed design.

Wet precipitators are increasingly being used as final cleanup devices behind and in combination with other air pollution control devices.

---

* This chapter is contributed by Wayne T. Hartshorn, Hart Environmental, Inc., Lehighton, Pennsylvania.

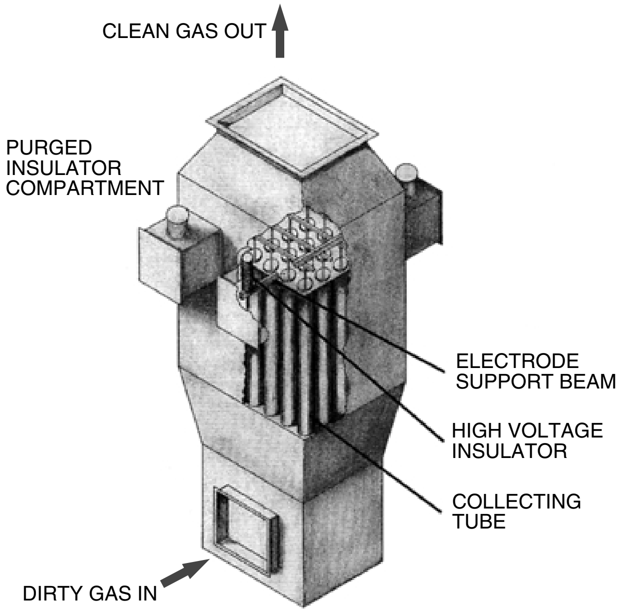

***Figure 20.1*** WESP components (Entoleter, Inc.).

Applications include chemical and hazardous waste incinerators; hog fuel boilers; acid mists; steel mill applications; vapor-condensed organics; nonferrous metal oxide fumes from calciners, roasters, and reverb furnaces; phosphate rock; veneer dryers; sludge incinerators; and blue haze and fume control. Figure 20.2 shows a WESP on a popular application, a veneer dryer.

The wet electrostatic precipitator can provide, in addition to fine or submicron particulate control, a final cleanup of mist elimination.

Another common application is on particle board dryers. These emissions can contain a combination of large particulate fines plus condensable aerosols. These products tend to be sticky so the WESP, properly designed, is a good candidate for its control. On this unit, the WESP is in the center of the picture and a droplet eliminator and fan is to the left of center. The gas flow is downward, thereby flushing solids toward the sump, assisted by gravity. The bypass stack for the dryer can be seen in the background.

## *Primary mechanisms used*

Electrostatic forces as well as diffusional forces are used to accomplish the separation. On some designs wherein the collecting tubes or surfaces are air or liquid cooled, thermophoretic forces are also used. In general, a series of zones are created wherein electrostatic forces sweep the particulate from the gas stream toward the contact (collecting) surface, which is periodically flushed with water to prevent the buildup of a resistive layer.

*Figure 20.2* WESP on veneer dryer (Geoenergy International, Corp.).

*Figure 20.3* Particle board dryer WESP (Geoenergy International, Corp.).

To a minor extent, the WESP is also a gas absorber. The flushing system can also provide some mass transfer of contaminant gases into the liquid.

## *Design basics*

WESPs consist of emitting electrodes mounted inside collecting tubes. A high voltage is introduced to the emitting electrode and a corona (charged field) is produced between the emitting electrode and the collecting electrode. Pollutant particles (sometimes solids, sometimes aerosols, often a mixture

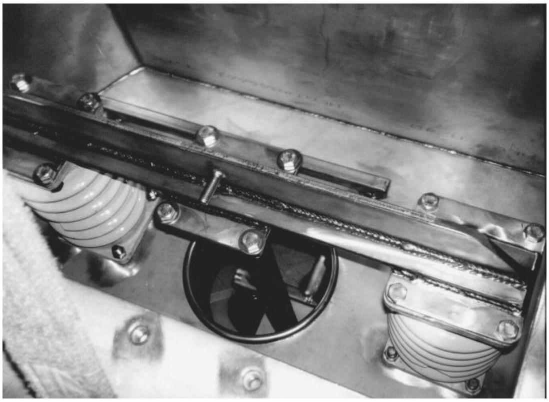

*Figure 20.4* Electrode support of WESP (Hart Environmental, Inc.).

of both) pass through this corona and are moved toward the collecting electrode where they momentarily attach. Periodically, a flush of liquid (usually water) flushes the particulate away.

Many manufacturers have extended and extrapolated methods of sizing electrostatic precipitators. However, there has not been significant change in the state-of-the-art of electrostatic precipitation. Concentration has been centered about hardware improvements for reliability (Figure 20.4), voltage, and spark controls to maintain maximum stable electrical fields (Figure 20.5), increasing sizes to secure compliance with new and more stringent regulations (Figure 20.6), and attention to new and improved materials of construction for longer life and more resistance to corrosive gases (Figure 20.7). Further development work has resulted in more effective arrangements and configurations of collection and charging zones in the devices (Figure 20.8). Some of this work has provided for higher particle charging or more intense

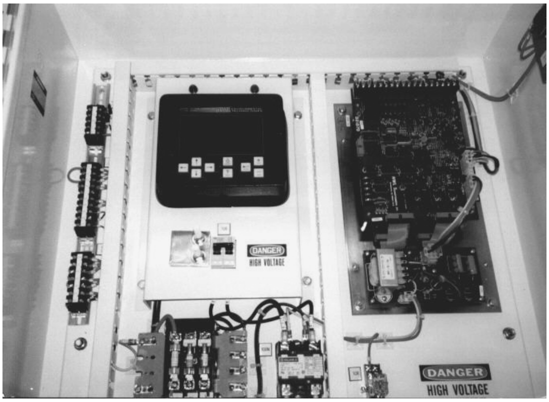

*Figure 20.5* Modern WESP high voltage controls (Hart Environmental, Inc. Installation/NWL Control Corp.).

*Figure 20.6* Picture of sonic development WESP designed and serviced by Wayne T. Hartshorn.

*Figure 20.7* All alloy WESP electrode bank (Hart Environmental, Inc.).

*Figure 20.8* Multiple discs on electrode (Hart Environmental, Inc.).

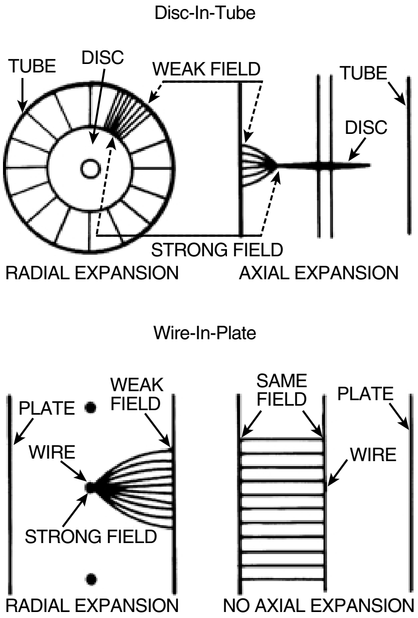

*Figure 20.9* Disc vs. wire corona formation comparison (TurboSonic Technologies Inc.).

ionization (Figure 20.9). This has definitely added improvements to the state-of-the-art of fine particle collection.

Notice the insulators on either side of the discharge electrode mast (center), which passes through to the electrode frame located below.

To control the WESP and reduce sparking, modern solid state controls are used that incorporate feedback type logic. They bring the voltage up to the sparking potential then back off slightly, automatically, although the conditions in the WESP may vary.

The vertical tubular arrangement of the collecting tubes is shown in Figure 20.6. These tubes may be round or multisided, depending on the vendor.

To keep the discharge electrode masts centered, some firms use frames top and bottom. Modern designs use specially designed swivels that allow alignment of the electrodes, then lock them in place. These swivels are shown in Figure 20.7 just below the cross members. Because a WESP often handles corrosive gases, the vessel can be made from corrosion resistant alloys or even nonmetallic fiberglass (if the surface is suitably prepared with a conducting surface).

To produce high efficiency, some vendors use multiple emitting discs on the discharge electrodes. These discs are shown in Figure 20.8 as they extend down into the collecting tube.

Discs are used instead of wire so that a series of intense corona fields can be produced. This can best be seen diagrammatically in Figure 20.9.

The use of modern sparking controls has allowed the use of multiple discs and therefore multiple corona zones to be produced. A strong corona field can be produced between the edge of the disc and the collecting tube, much like the electrode to ground on an automotive spark plug. The controls of the WESP, however, allow a corona to be formed before the spark jumps the gap. This combination produces the greatest particulate control efficiency.

There are two types of electrostatic precipitator technologies. There is the dry electrostatic precipitator, which is cleaned of collected material by means of rapping and/or vibrating mechanisms. The wet precipitator is cleaned of collected material by means of irrigated collecting surfaces (Figure 20.10).

Until recently, the wet precipitators comprised a small share of the market for electrostatic precipitators. Originally, the leading application for wet precipitators was the collection of sulfuric acid. A typical unit was self-irrigating, tube-type, and lead-lined fabrication. Reinforced thermosetting plastic has gained increased acceptance as well.

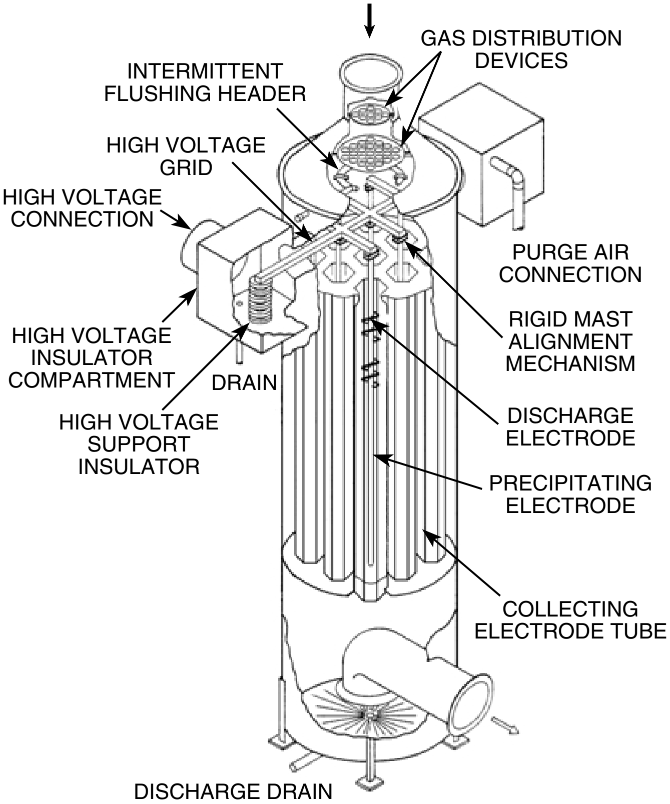

***Figure 20.10*** Basic components of a WESP (TurboSonic Technologies Inc.).

## *Types of wet precipitators*

The design of wet electrostatic precipitators can be characterized by configuration, arrangement, irrigating method, and materials of construction.

### *Configuration*

There are two basic precipitator configurations: plate and tube. The plate type consists of parallel plates with discharge elements assembled between each plate. The tube type consists of an array of tubes, round or multisided, with a discharge electrode located in the center of each.

### *Arrangement*

Gas flow can be arranged in parallel or series, and horizontally or vertically. This feature also distinguishes a wet from a dry precipitator — because particles are removed from the latter through rapping, it is always arranged horizontally.

### *Irrigation method*

This has a greater impact on the operation of a wet precipitator than any other factor. There are many irrigation methods.

In self-irrigation, the most common method, captured liquid droplets wet the collecting surface. This method only works when the particles are mostly liquid. In a specialized variation, condensation from the gas stream wets the collecting surfaces. A cold fluid, usually air, is circulated on the outside of the collecting tube to promote condensation. As with mist collectors, irrigation by condensation works best with a gas stream high in moisture content and low in particle concentration. For this reason and others, the WESP is often used as a very high efficiency mist eliminator after other gas cleaning devices such as fluidized bed and Venturi scrubbers. As shown in Figure 20.11, it can also be used after gas absorber/coolers such as packed towers wherein gases are cooled then sub-cooled to condense water vapor onto water droplets (flux force condensation).

In spray irrigation, spray nozzles continuously irrigate the collecting surfaces. The spray droplets and the particles form the irrigating film. In intermittently flushed irrigation, the precipitator operates cyclically. During collection, it operates as a dry precipitator without rapping. It is periodically flushed by overhead spray nozzles. This method only works well if the particles are easily removed.

In film irrigation, a continuous liquid film flushes the collecting surface. Because the film also acts as the collecting surface, the plate or tube does nothing more than support the film. Therefore, the electrical conductivity of the irrigating fluid becomes an important factor. Nonconductive irrigants will not work. Also important are the physical properties of the

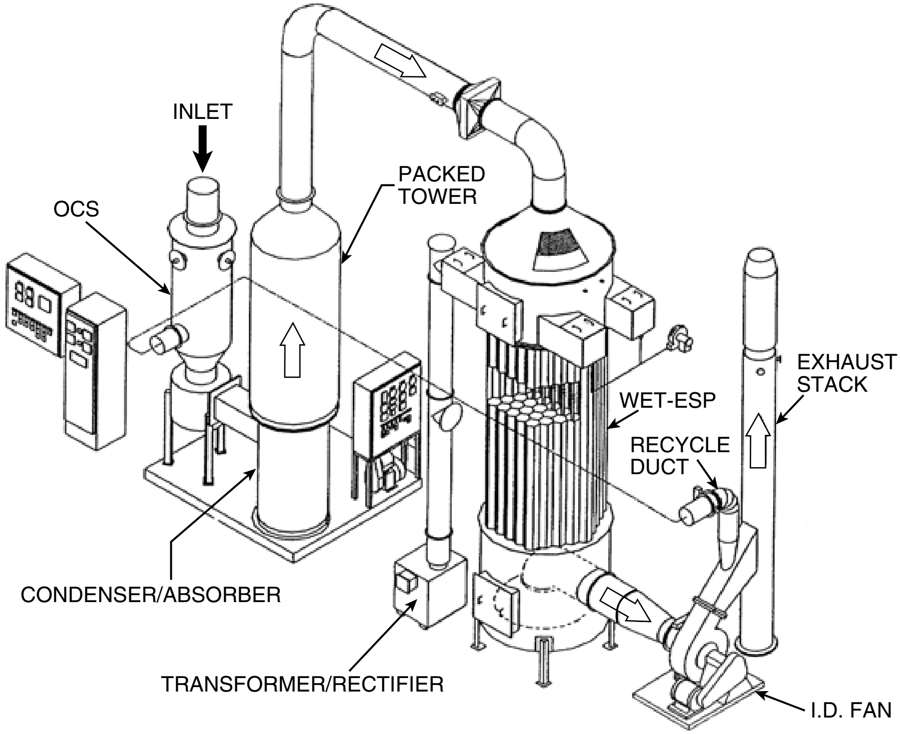

*Figure 20.11* Flux force condensation type system with WESP (TurboSonic Technologies Inc.).

film and the liquid-distribution network. The film must be smooth and well distributed to avoid high voltage arcing, which can damage the unit and result in poor performance. Additionally, the distribution piping, plenums and weirs must be designed to avoid dead zones that promote settling or plugging.

Electrostatic precipitation is made possible by the corona discharge. Through an effect known as the avalanche process, the corona discharge provides a simple and stable means of generating the ions to electrically charge and collect suspended particles or mists. In the avalanche process, gases in the vicinity of a negatively charged surface break down to form a plasma, or glow, region when the imposed voltage reaches a critical level (Figure 20.12). Free electrons in this region are then repulsed toward the positive, or grounded, surface, and finally collide with gas molecules to form negative ions.

These ions, being of lower mobility, form a space-charge cloud of the same polarity as the emitting surface. By restricting further emission of high-speed electrons, the space charge tends to stabilize the corona. With a corona established, dust particles or mists in the area become charged by the ions present, and are driven to the positive electrode by the electric field. Of

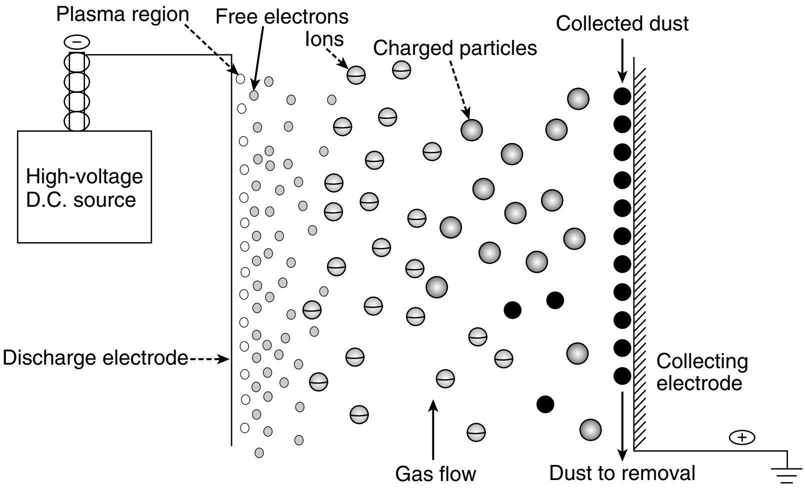

*Figure 20.12* Electrostatic basics (Wayne T. Hartshorn).

course, for the forgoing to be successful, the proper electrode geometry, gas composition, and voltage must be present.

Particle charging is only the first step in the precipitation process. Once charged, the particles must be collected. As explained, this happens as a matter of course because the same forces that cause a particle to acquire a charge also drive the like-polarity particle to the grounded surface.

The next step is particle removal. In a wet precipitator the material is rinsed from the collecting surface with an irrigating liquid.

## Selecting a wet electrostatic precipitator

The Deutsch equation describes precipitator efficiency under conditions of turbulent flow:

$$E = 1 - \exp(-AW/Q)$$

where

$E$ = collection efficiency, 1-(outlet particle concentration/inlet particle concentration)
$A$ = area of the collecting surface
$W$ = velocity of particle migration to the collecting surface
$Q$ = upward gas flow rate (gas velocity × cross-sectional area of the passage)

The derivation of equation depends on simplifying assumptions, the most important being: all particles are the same size, the gas velocity profile is uniform, a captured particle stays captured, the electric field is uniform, and no zones are untreated.

To account for the numerous variables, a modified Deutsch equation is used, in which the term *W* (particle migration velocity) is replaced by another known as *effective migration velocity* (EMV). Empirically determined, *EMV* is a characterizing parameter that accounts for all the nonidealities mentioned, as well as for the true particle-migration velocity. Values for EMV used in the modified form are considerably lower than true particle velocities calculated or measured in the laboratory.

Most wet electrostatic precipitators do not suffer from the nonidealities encountered by the dry type devices. Also, because the wet type precipitator is frequently configured for vertical gas flow, sneakby is avoided. Therefore, *EMV* values for wet precipitators are usually higher than those for dry precipitators. This means that, for a specific application, a wet device can be smaller than an equivalent dry device. This is additionally true because a wet precipitator operates on a cooled, lower volume gas stream.

Because the collecting surfaces in a wet precipitator are cleaned by a liquid, the wet precipitator can be used for virtually any particle emission.

Generally, the physical and chemical properties of the particles are not an important factor in the design of wet precipitators, as well as factors that are normally of concern in the design of dry precipitators, such as electrical resistivity, surface adhesion, and flammability. A possible exception is the dielectric constant of the particles. It has a weak effect on the maximum charge that can be achieved, according to the theoretical relationship for predicting particle saturation charge.

$$N = \{1 + 2[(k - 1)/(k + 2)]\}(E_o \Sigma a^2/e)$$

where

$N$ = saturation charge
$k$ = dielectric constant
$E_o$ = charging field
$a$ = particle diameter
$e$ = electron charge

The effect of dielectric constant on performance is not normally considered in the design of precipitators because the dielectric constant of most particles is high, and has little effect on the charge. However, the constant may be important in oil mist collection by a wet precipitator. Some oils tend to have very low constants, which can markedly lower collection efficiencies.

Nevertheless, there are many applications for which a wet precipitator should be carefully considered, and even some for which wet precipitation should be the only technology of choice (Figure 20.13). Some such conditions occur when the gas stream has already been treated in a wet scrubber, the temperature of the gas stream is low and its moisture content is high, gas and particles must be simultaneously removed, the loading of submicron particles is high and removal must be very efficient, liquid particles are to be collected, and the dust to be collected is best handled in liquid.

|  | Scrubber | Fabric Filter | Dry ESP | Wet Precipitator |
|---|---|---|---|---|
| Fine particles |  | X | X | X |
| Liquid particles | X |  |  | X |
| Low gas temp./ high dew point | X |  |  | X |
| Sticky particulate | X |  |  | X |
| High efficiency |  | X | X | X |
| Gas absorb. req'd | X |  |  | X |
| High resistivity particles | X | X |  | X |

*Figure 20.13* Application comparison chart (Wayne T. Hartshorn).

Unlike other gas cleaning methods, the applicability of wet precipitators strongly depends on the particular design. In some cases, certain wet precipitator designs may not be suitable for certain applications. For instance, a precipitator for gas streams containing adherent particles must be continuously, not intermittently, irrigated.

The second most important factor in design after the type and configuration has been decided is materials of construction. Wet precipitators operate at, or below, the adiabatic saturation temperature of the irrigating fluid (usually water), and corrosion is a constant concern.

Wet precipitators are rarely made of carbon steel, at least the surfaces that are in contact with the gases to be treated. Carbon steel construction may only be feasible when the gas stream is high in pH and low in oxygen. Ordinarily, wet precipitators are constructed of one or more corrosion-resistant materials. These materials can include simple stainless steels, exotic high-nickel alloys, reinforced thermo-setting materials, and thermoplastics.

From a materials standpoint, the casing, or housing, is the least critical element. The outside of the shell housing not in contact with the gases need not even be corrosion-resistant, only capable of withstanding ambient conditions. The collecting surfaces should afford the maximum resistance to chemical attack. Also, fabrication points subject to corrosion should be minimized, because failures in the collecting surfaces can disturb the electric field and cause arcing, lowering performance. Because the discharge electrodes are usually not irrigated, there is a concentrating effect on their surfaces that does not occur on wetted areas. For example, if the gas stream contains 200 to 500 ppm $S0_2$, 10 to 20 ppm HCl, and 0 to 5 ppm HF, the pH on the moist surface of the discharge electrodes will be about 1.0, even if the irrigant is kept at a pH of 3.0 or higher. The galvanic effects of operation in the range of 40,000-V direct current compounds the corrosion potential of the concentrating effect. For these reasons, the discharge electrodes should always be fabricated of a material of significantly greater corrosion resistance than that of any other part of the wet precipitator.

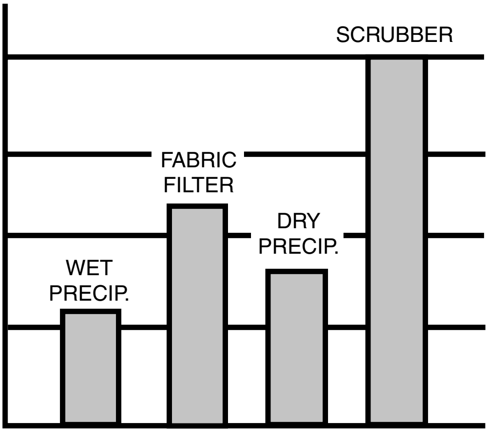

***Figure 20.14*** Relative energy consumption (Hart Environmental, Inc.).

Wet precipitators capture fine or submicron particles without high-energy consumption (Figure 20.14). Their capture efficiency of submicron particles is greater than that of the highest-energy wet scrubber. The size of the wet precipitator strongly affects its performance in collecting fine particles.

Wet precipitators are particularly effective in capturing large particles. However, most gas cleaners do a good job of this; 30 to 40% of the emissions from a dry precipitator consist of large particles, mainly because of emissions due to rapping and re-entrainment. Similarly, a considerable portion of the emissions from a wet scrubber is caused by mist carryover (another form of large particles).

## *Operating suggestions*

Wet precipitators are relatively insensitive to the chemical and physical characteristics of the gas stream or the particles. Gas streams at almost any temperature or of any composition can ultimately be treated with the proper design. With added quenching and conditioning, wet precipitators can handle flue gases at over 2000°F, because the adiabatic saturation temperature will always be less than approximately 180°F. Because wet precipitators can be constructed from a wide variety of materials, they can treat the most aggressive gas streams.

The factors that most influence the cost of wet precipitators are collection efficiency requirements, materials of construction due to corrosive nature of gas stream, and physical size due to the gas volume to be treated.

The actual cost of a wet precipitator in most cases will be site-specific. A cost and systems analysis should be performed to determine the configuration, materials of construction, and size. Typically, a wet precipitator system to treat corrosive gases can run from $75 to $250 per square feet of collecting surface area; for noncorrosive applications, the price may be in the $25 to $75 range.

Wet precipitator operating costs are among the lowest for gas cleaning equipment. They operate at lower pressure drops than scrubbers or fabric filters, and generally have less collecting area and require less high voltage power than dry precipitators. For estimating purposes, high voltage power consumption will usually range between 0.1 and 0.5 W/actual $ft^3$/min gas volume, depending on collection efficiency requirements. Auxiliary equipment, such as purge air blowers, heaters, and pumps are highly site-specific, so estimates of their power consumption should be done on a case-by-case basis.

Regarding installation orientation, it is suggested that the high voltage supply be mounted in the serviceable area as close as practical to the WESP. This keeps the high voltage runs minimal in length and therefore less expensive to install and maintain.

The WESP is a very effective device for use in the collection of submicron particulate and mists where those contaminants can be water flushed from the collecting surfaces.

# *Appendix A: Additional selected reading*

The following is a list of books and publications that are often seen on the shelves of "professional" air pollution control personnel. For more detailed information about a particular product, application, or gas cleaning technique, these references will be of great value to you.

A listing of the details of the individual publications is at the end of this Appendix.

## *General topics*

### *Industrial Ventilation, A Manual for Recommended Practice*

This classic work is a valuable reference regarding gas collection and movement techniques. In print since 1951, it contains information regarding collection hood sizing, conveying velocities, ductwork friction losses, contaminant exposure limits, and the ventilation aspects of industrial hygiene.

### *Air Pollution Engineering Manual*

As an "update" of the old "AP-42" U.S. government publication regarding the application of air pollution control devices, this essential resource contains a detailed compendium of application descriptions by industry written by a variety of experienced designers and application engineers. A wealth of practical and useful information is contained therein.

### *Fan Engineering*

Produced by Howden Fan Company, this power packed book contains excellent information regarding gas flow rates, gas moving devices (such as fans), air pollution control hardware, psychometrics, and related air/gas properties.

### *McIllvaine Scrubber Manual*

Actually, this is a comprehensive manual in the form of multiple binders plus a newsletter all available on a subscription basis. It is excellent for people or firms who deal with air pollution control problems repeatedly during the year. It is of great value as well for people who must keep "up to speed" with the latest advances in pollution control. Highly recommended.

### *Psychrometric Tables and Charts*

If you are not familiar with the properties of air and the moisture it can carry, this book by Zimmerman and Lavine might appear a bit daunting. Though computerized gas mixture property predicting programs are now available (see the DesJardins reference under the "Details" section that follows), the Psychrometric Tables and Charts are still in daily use by air pollution control professionals. With these charts and tables, one can accurately predict gas mixture properties which form the basis of gas cleaning system design.

### *Cameron Hydraulic Book*

Particularly useful regarding wet scrubbers, this classic reference provides excellent information regarding pumping, piping, frictional losses, etc.

### *Mass Transfer Operations*

Few books on mass transfer are as widely used as this famous book by Robert E. Treybal. Often used as a textbook, it is found on the shelves of pollution control professions or process designers whose job it is to design equipment that moves a gas (or heat) into or out of a liquid.

### *Various Corrosion Guides*

Too numerous to mention specifically by name, a number of pump and/or piping materials suppliers publish corrosion guides for the application of their products. These are "guides," however, and do not offer guarantees of material of construction applicability. The suggested thing to do is accumulate a variety of them and look for a consensus as to materials deemed suitable for the particular application. A few of the more popular guides are listed in the following section.

## *Publication Details*

The following is a list of publication details for the items mentioned above plus a few other periodicals and resources you may consider for your library.

*A Guide to Corrosion Resistance*
Climax Molybdenum Company
One Greenwich Plaza
Greenwich, CT 06830

*Air Pollution Control-Traditional and Hazardous Pollutants*
Dr. Howard E. Hesketh
Technomic Publishing Co.
CRC Press
2000 NW Corporate Blvd.
Boca Raton, FL 33431

*Air Pollution Engineering Manual*
Anthony J. Buonicore and Wayne T. Davis, editors
Van Nostrand Reinhold Publishers
115 Fifth Avenue
New York, NY 10003

*Atlac Guide to Corrosion Control*
Reichold Chemical Company
P.O. Box 19129
Jacksonville, FL 32245

*Bete Fog Nozzle Catalog*
50 Greenfield Street
Greenfield, MA 01302–0311

*Cameron Hydraulic Data*
C.R. Westaway and A.W. Loomis
Ingersoll Rand
Woodcliff Lake, NJ 07675

*Chemical Engineering*
Chemical Week Publishing
P.O. Box 619
Mt. Morris, IL 61054–7580
http://www.echm@kable.com

*Derakane Chemical Resistance Table*
Dow Chemical Company
2040 Willard H. Dow Center
Midland, MI 48640

*Dwyer Instrument Catalog*
Dwyer Instruments
P.O. Box 373
Michigan City, IN 46361
http://www.dwyer-inst.com

*Fan Engineering*
Buffalo-Forge Company
(Contact your local sales representative, or bookstore)
Buffalo, NY

*Handbook of Separation Techniques for Chemical Engineers*
Phillip A. Schweitzer, editor
McGraw-Hill
1221 Avenue of the Americas
New York, NY 10020

*Huntington Alloys Corrosion Chart (Nickel Alloys)*
Ask local representative or write to:
Huntington Alloys, Inc.
Huntington, WV 25720

*Industrial Research Service's Psychrometric Tables and Charts*
O.T. Zimmerman and Dr. Irvin Lavine
Industrial Research Service, Inc.
Dover, NH

*Industrial Ventilation: A Manual of Recommended Practice*
American Conference of Governmental Industrial Hygienists
6500 Glenway Avenue
Bldg. D-7
Cincinnati, OH 45211

*Journal of the Air and Waste Management Association*
P.O. Box 2861
Pittsburgh, PA 15230

*Mass Transfer Operations*
Robert E. Treybal
McGraw-Hill
1221 Avenue of the Americas
New York, NY 10020

*Pollution Engineering Magazine*
Cahners Business Information
8773 S. Ridgeline Blvd.
Highlands Ranch, CO 80126
http://subsmail@cahners.com

*Power*
11 West 19th Street
New York, NY 10011

*Power Engineering*
PennWell Corp.
1421 S. Sheridan Road
Tulsa, OK 74112
http://www.power-eng.com

*Psychrometric Problem Solving Program*
DesJardins and Associates
214 Running Spring Drive
Palm Desert, CA 92211
Rdesjardins@dc.rr.com

*Stainless Steel in Gas Scrubbers*
Committee of Stainless Steel Producers
American Iron and Steel Institute
1000 16th Street, NW
Washington, D.C. 20036

*Technical Association for the Pulp and Paper Industry*
TAPPI Journal
15 Technology Parkway, South
Norcross, GA 30092
http://www.tappi.org

*The McIllvaine Scrubber Manual*
The McIllvaine Company
2970 Maria Avenue
Northbrook, IL 60062

# Appendix B: List of photo contributors

Advanced Environmental Systems
2440 Oldfield Point Road
Elkton, MD 21921-6712
www.aesinc.com

Adwest Technologies, Inc.
East Coast Office
Wellsville, NY 14895

Adwest Technologies, Inc.
West Coast Office
1175 N. Van Horne Way
Anaheim, CA 92806-2506
www.adwestusa.com

Air Instruments
and Measurements, Inc. (AIM)
PMB391, 3579 E. Foothill Blvd.
Pasadena, CA 91107-3119
www.aimanalysis.com

Allen-Sherman-Hoff (ASH)
Diamond Power International
185 Great Valley Parkway
Malvern, PA 19355
www.diamondpower.com

Alzeta Corp.
2343 Calle del Mundo
Santa Clara, CA 95054-1008
www.alzeta.com

American Air Filter
AAF International
P.O. Box 35690
Louisville, KY 40232-0490
www.aafintl.com

Amcec, Inc.
2525 Cabot Drive
Suite 205
Lisle, IL 60532
www.amcec.com

Babcock & Wilcox Company
20 South Van Buren Avenue
Barberton, OH 44203
www.babcock.com

Banks Engineering, Inc.
3715 East 55th Street
Tulsa, OK 74135
www.banksengineering.com

Barnebey Sutcliffe Corp.
P.O. Box 2526
Columbus, OH  43216
www.bscarbons.com

BHA Group, Inc.
PrecipTech, Inc.
8800 E. 63rd St.
Kansas City, MO  64133
www.bhagroup.com

Bionomic Industries Inc.
777 Corporate Drive
Mahwah, NJ  07430
www.bionomicind.com

Bundy Environmental Technology
6950-D
Americana Parkway
Reynoldsburg, OH 43068
www.bundyenvironmental.com

Bremco
P.O. Box 1491
Claremont, NH  03743
www.bremco.com

Carbtrol Corp.
955 Connecticut Ave.
Bridgeport, CT  06607
www.carbtrol.com

Claffey
C&W Technical Sales, Inc.
3555 Hillside Road
Slinger, WI  53086

Donaldson Company Inc.
Industrial Air Filtration
P.O. Box 1299
Minneapolis, MN  55440-1299
www.donaldson.com

Duske Design
and Equipment Co., Inc.
10700 W. Venture Drive
Franklin, WI  53132

Entoleter, Inc.
251 Welton Street
Hamden, CT 06517
www.entoleter.com

Envirogen
4100 Quakerbridge Road
Lawrenceville, NJ 08648
www.envirogen.com

Euro-matic Ltd.
Clausen House
Perivale Industrial Park
Horsenden Lane  South
Greenford, Middlesex, UB6-7QE,
U.K.
www.euro-matic.com

Fluid Technologies (Environmental), Ltd.
41 Surbiton Road
Kingston-upon-Thames, Surrey
KT1 2HG, U.K.

Geoenergy International Corp.
7617 S. 180th Street
Kent, WA  98032
www.geoenergy.com

Hart Environmental, Inc.
P.O. Box 550
Lehighton, PA  18235-0550
www.hartenv.com

John Zink Company, LLC
Div. of Koch-Glitsch, Inc.
11920 E. Apache
Tulsa, OK  74116
www.johnzink.com

Kimre, Inc.
16201 SW 95th Ave., Suite 303
Miami, FL 33157-3459
www.kimre.com

Koch-Glitsch, Inc.
4111 E. 37th Street N.
Wichita, KS  67220
www.koch-glitsch.com

Lantec Products, Inc.
5308 Derry Ave.
Unit E
Agoura Hills, CA  91301
www.lantecp.com

Hosokawa Mikropul
20 Chatham Road
Summit, NJ  07901
www.hosokawamicron.com

Misonix Incorporated
1938 New Highway
Farmingdale, NY  11735
www.misonix.com

Monsanto Enviro-Chem Systems, Inc.
P.O. Box 14547
St. Louis, MO 63178
www.enviro-chem.com

Munters Corp.
P.O. Box 6428
Fort Myers, FL 33911
www.munters.com

Munters Zeol
79 Monroe Street
Amesbury, MA  01913
www.munterszeol.com

Rauschert Industries, Inc.
351 Industrial Park Road
Madisonville, TN  37354
www.rauschert.com

Sly, Inc.
P.O. Box 5939
Cleveland, OH 44101
www.slyinc.com

SRE, Inc.
510 Franklin Ave
Nutley, NJ  07110
www.srebiotech.com

Steelcraft Corp.
P.O. Box 820748
Memphis, TN  38182-0748
www.steelcraftcorp.com

T-Thermal Company
5 Sentry Parkway
Suite 204
Blue Bell, PA 19422
www.t-thermal.com

Trema Verfahrenstechnik GmbH
Kulmacher Strasse 127
D-95445
Bayreuth, Germany
www.trema.de

TurboSonic Technologies Inc.
550 Parkside Drive
Suite A-14
Waterloo, Ontario, Canada
N2L 5V4
www.turbosonic.com