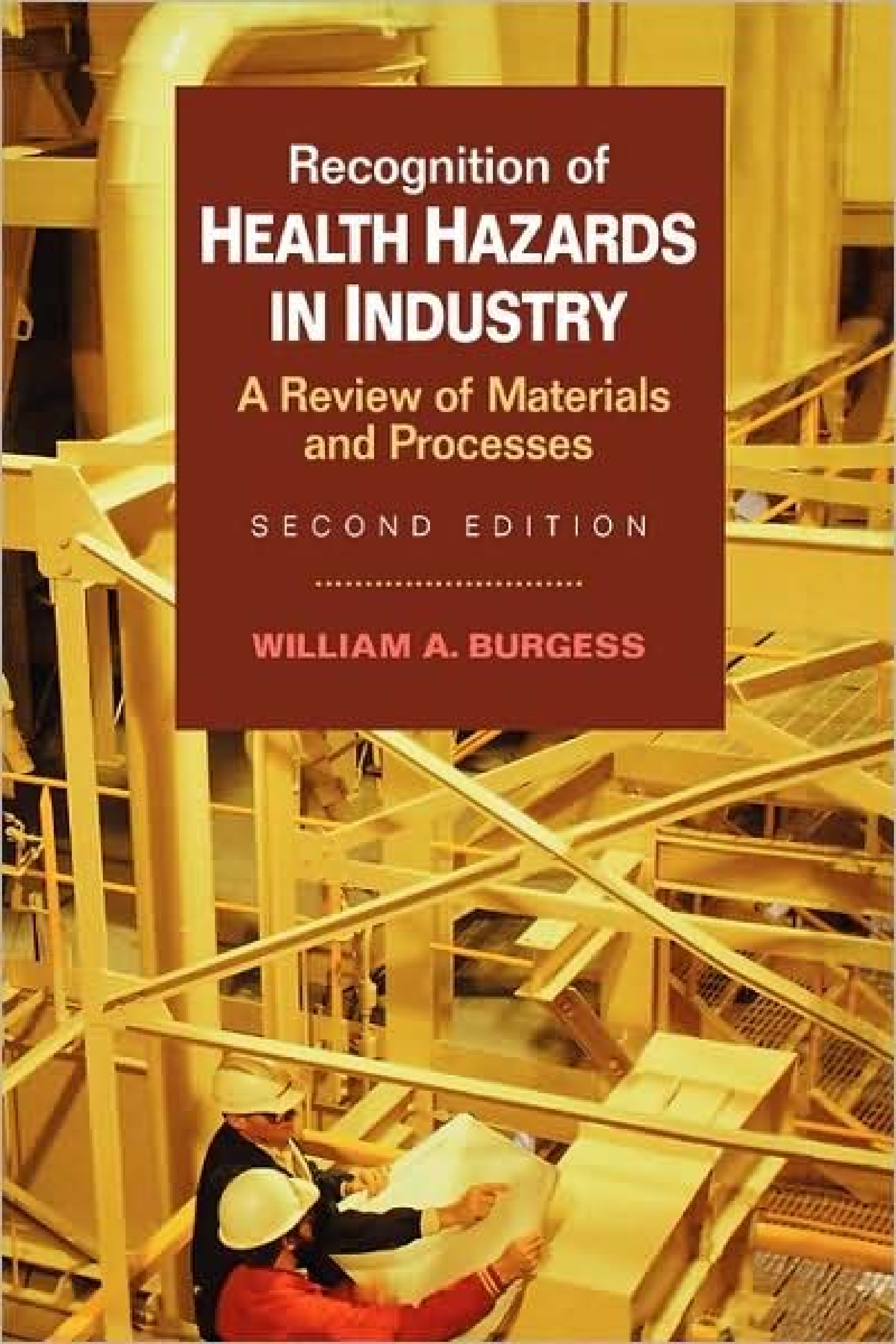

Recognition of HEALTH HAZARDS IN INDUSTRY

A Review of Materials and Processes

SECOND EDITION

WILLIAM A. BURGESS

RECOGNITION OF HEALTH HAZARDS IN INDUSTRY

A Review of Materials and Processes

SECOND EDITION

William A. Burgess
Associate Professor of Occupational Health Engineering, Emeritus
Harvard School of Public Health
Boston, Massachusetts

A WILEY-INTERSCIENCE PUBLICATION
JOHN WILEY & SONS, INC.
New York · Chichester · Brisbane · Toronto · Singapore

This text is printed on acid-free paper.

Library of Congress Cataloging in Publication Data:

Burgess, William A., 1924–
Recognition of health hazards in industry: a review of materials and processes / William A. Burgess.—2nd ed.
p. cm.
"A Wiley-Interscience publication."
Includes index.
ISBN 0-471-57716-2 (cloth)
1. Industrial hygiene. 2. Manufacturing processes—Health aspects. I. Title.
RC967.B83 1995
363.11—dc20 94-18498

10 9 8

To Occupational Health Professionals,
for the Cooperative Spirit
in Which They Perform Their Roles

ACKNOWLEDGMENTS

This book had its origin in a chapter on potential exposures in industry published in *Patty's Industrial Hygiene and Toxicology*. The discussion of glassmaking was adapted from material written by the late J. Dunn from the original *Patty* volume. The section on industrial radiography was prepared by John J. Munro. Flow charts prepared by the Environmental Protection Agency have been used extensively as have field study reports of the National Institute for Occupational Safety and Health. As a general practitioner of industrial hygiene I have surveyed most of the operations discussed in the book. Colleagues in industry and faculty and students at the Harvard School of Public Health have been helpful in reviewing the discussion of manufacturing operations and sharing their experiences on health hazards in the workplace. Several industries, industrial associations, and unions contributed material and their contributions are acknowledged in the text.

If this edition is successful in conveying information on workplace health hazards in a clear and concise way, it is due in large part to the contributions of two persons. Wenonah Clarke did an excellent job of converting my scrawls and vague directions to clear and crisp finished drawings. Martin Horowitz, a skilled industrial hygienist, reviewed every page and provided excellent advice on both images and words. I am very grateful to both for their contributions.

W.A.B.

PREFACE

The second edition of this book is written for the student who is pursuing a degree in occupational health and safety, the physician who seeks to relate medical symptoms to job-related exposures, the plant engineer who must consider health issues in facility design, and the management and union safety representatives who have responsibility for assuring that industrial processes do not present a health hazard to workers. It should also serve as a practical field reference for industrial hygienists in insurance, consulting, and compliance activities who encounter a wide range of industrial operations.

This book differs in organization, approach, and content from the first edition. The level of detail on individual topics has been expanded. Some discussions of workplaces have been eliminated, while information about microelectronics, chemical processing, and plastics fabrication has been added. The information is now presented in chapters which are grouped in reasonable but not rigorous clusters.

The focus of the book continues to be identification of the major health issues in the workplace with an overview of common control approaches. Exposure data selected from published studies have been of demonstrated value to the reader and coverage of such data has been expanded. Epidemiologic and other health status studies have been cited to illustrate that health effects continue to occur in the work settings under discussion and that diligence is required in their review.

Colleagues who practice industrial hygiene in other countries chide occupational health professionals in the United States for being parochial, tending to look only within our own boundaries for the best in contemporary practice. I have attempted to counter this tendency by citing the industrial hygiene practices of other countries. Indeed much of the fresh information presented in this edition has been gathered from outside the United States, particularly from the European Community.

Kind comments on the value of the first edition have usually been accompanied by a request that more detail on processes and materials be presented to ensure a better understanding of a process and its impact on the worker. I have responded to this request and as a result there is a large increase in the number of figures and tables.

WILLIAM A. BURGESS

Marion, MA
October 1994

CONTENTS

PART ONE

INTRODUCTION

CHAPTER 1

Elements in the Recognition of Health Hazards

1.1 INTRODUCTION

Occupational or industrial hygiene has commonly been defined as the recognition, evaluation, and control of occupational health hazards. Recently it has appropriately been broadened to include not merely the prevention of disease in workers but all environmental factors that may result in injury, illness, or impairment or affect the well-being of workers and the community (AIHA,1993). Whatever the definition one accepts, the first step to be taken in a preventive program in occupational health is the identification or recognition of potential health hazards. Mastery of this process is based on thorough knowledge of industrial materials and processes. Without this knowledge it is difficult for the surveyor to identify those industrial processes that have the potential to cause occupational disease. This volume is designed to assist occupational health personnel in preparing for this review by describing industrial processes and their impact on the workplace environment. The goal of this book is to provide the reader with an understanding of industrial operations, including familiarity with in-plant terminology, the identity and sources of air contaminants that may be released to the workplace, and the physical stresses introduced by such processes. This book does not cover the design and execution of a detailed industrial hygiene survey. Comprehensive treatment of this critical subject is found elsewhere (Clayton and Clayton 1991; Roach, 1992).

1.2 MATERIALS

A system for providing a material's specifications, including composition and physical and chemical properties, has evolved in the United States; without such specifications industry could not function. These specifications for industrial materials are useful in evaluating worker exposure and are frequently cited in the text. Detailed material data and references to other sources of information on metal specifications are presented in Appendix A.

How does one determine what materials and processes are used in the plant? Prior to visiting the facility the surveyor can obtain preliminary information by referring to the various engineering and chemistry texts listed in Appendix B that contain process flow diagrams and general descriptions of materials. Although some manufacturing facilities do have proprietary materials and processes, most of the standard industrial goods are produced in a remarkably similar fashion.

In large manufacturing plants, the detailed process information maintained by the company will include lists with raw material specifications and approved vendors. These data are usually not available on the production floor but can be obtained from the product engineer, material control laboratory personnel, or purchasing agent. In plants with proprietary processes, this information may be available from senior management personnel, and its release must usually be negotiated.

A raw material list may not be available in the small plant manufacturing a conventional product. Standardization of materials in these plants is frequently not necessary since variations in material and chemical composition have little effect on the product. A list may be generated by direct observation at the work site or by conducting an inventory of the material at the receiving dock or in the warehouse. Better yet, ask to see the plant's MSDS compilation, which is required under the OSHA Hazard Communication regulations.

Most of the chemicals used in industry are technical grade; that is, they are not pure chemicals but contain certain impurities. In a sophisticated process these impurities may affect the yield and quality of the product. In this case the manufacturer will have detailed material specifications, and routine analysis of incoming materials will be done by the material control laboratory. These data may be helpful in the plant survey. If a low toxicity impurity is present as a fraction of a percent it probably will not be a health hazard. If the material is a highly volatile or easily released and toxic chemical, any impurity must be considered a potential hazard. Frequently one encounters chemicals in which the concentration of impurities may be as high as 20%. Such a case warrants detailed review. The issue of impurities is further complicated when their identity is unknown, even to the manufacturer of the material.

Information on the amount of raw material consumed in a manufacturing process is valuable when considering the relative risk to the worker. If only a few kilograms per month are used, follow-up may not be warranted. If large quantities are used, one would think that a material balance could be calculated and the quantity of chemical released to the environment could be estimated. The ventilation rates could then be determined, and the air concentrations in the workplace could be calculated. This is rarely successful. In general, use rates are only valuable for making qualitative assessments of exposure; one must rely on air sampling during the industrial hygiene evaluation step to determine exposure levels.

1.3 PROCESSES

Large volume standard chemicals and products are manufactured with rather similar processes and materials. The best description of the manufacturing process is obtained from the plant and most facilities will have such information, usually in the form of a flow chart. The engineering and chemistry texts cited in Appendix B provide similar data. The process nomenclature may differ between plants and the investigator should take care to clarify these differences before completing the survey. Plant personnel will not place much faith in occupational health reports that do not reflect knowledge of the plant and the associated terminology.

Many industrial associations provide educational information on the standard operations in their industry. Frequently, excellent flow charts are available and the larger associations have ongoing occupational health committees that may provide reports on industrial activities. A list of associations providing such information is presented in Appendix B.

Other sources of information on industrial processes are air pollution publications that provide detailed pollution emission rates from industrial operations. These reports are useful in occupational health studies since the flow diagrams identify the contaminant release points, the nature of the contaminant, and the quantity released.

1.4 EXPOSURE PATTERN

Once the operation has been defined and the contaminant release points identified, the time pattern during which the worker is exposed must be established. Since approximate data are usually adequate, one should not request an industrial engineering time study. If such a request were made, it would not be honored by the plant.

On selected operations it may be important to obtain accurate exposure times as a first step in identifying the potential hazards. For example, if a welder is performing a job that requires a long setup time, he may only be welding 5–10% of the shift time. However, in another operation a welder may be working on large metal parts, and arc time may be as high as 60–70% of the shift. In this case, arc time can be estimated by viewing the operation. In other processes utilization time on equipment and the quantity of material used during a shift provide an index of exposure time that may be helpful in assessing the hazard.

1.5 CONTROLS

There are conventional controls that one expects to see in place on certain industrial operations. The plant's failure to utilize these controls may suggest a lack of knowledge of or indifference to the control of health hazards. The common controls utilized in industry to minimize risk to employees are engineering controls, work practices, and personal protective equipment (Burgess, 1994). Process-specific controls are covered in this book and references are provided for access to detailed design data.

1.5.1 Engineering

One of the most effective engineering controls is ventilation; the principal source of ventilation design data is the American Conference on Governmental Industrial Hygienists' (ACGIH) industrial ventilation manual, and this source is referenced frequently in the text (ACGIH, 1992). The designs in the manual represent the best available engineering practice. Although these designs have been shown to limit exposure to acceptable levels in industry, the capture efficiency of hoods under plant conditions has not been evaluated. The design plates provide a description of hood geometry, airflow rate, duct transport velocity, and entry loss. In addition to the ACGIH manual, a number of other general ventilation design sources are available (Burton, 1989; Burgess et al.,1989; BOHS, 1987).

The desirable procedure for implementing ventilation controls is that an engineering design is proposed, installation is made based on the design, and the completed ventilation system is evaluated to ensure it meets the minimum design specifications and provides effective control of the air contaminant. One should not concede a priori that control is achieved just because a system has been installed and looks similar to the recommended design.

A number of simple field observations can be made to assess the value of the local exhaust ventilation system. If the system has been evaluated, there is usually some evidence—either visible holes in the duct, indicating that duct velocities have been measured, or a notation of velocity or exhaust volume written on the hood. Plant engineering may have the system on their preventive maintenance schedule and records of performance may be available for comparison with recommended standards. The occupational health specialist inspecting ventilation systems can often determine their adequacy by making simple checks. Examine the duct to see if it is intact or if it has been damaged. If the system handles particulates, knock on the duct. A hollow sound indicates that transport velocities are adequate for conveying particulates. A dull thud suggests that dust is settling out in the duct. If a new branch has been added to the main duct of an old system, the performance of the original system may be impaired. One should follow the duct run and determine if a fan is installed in the system. If a fan is installed, determine if it is operating in the correct direction. Centrifugal blowers will move 30–40% of their rated capacity while running backward. A smoke tracer released at the hood capture point can be used to establish the need for further evaluation of the system.

1.5.2 Work Practices

Work practices should only be considered an integral part of a control program if (1) they have been documented, (2) all employees have been informed of the work practices, and (3) they are a part of the training program for new employees. Work practices may develop at the plant over a period of years or they may be introduced as a result of an Occupational Safety and Health Administration (OSHA) standard. The workers may be a valuable resource for developing procedures to minimize exposure.

In evaluating the effectiveness of published work practices, observe the workers to determine if they all use the same procedures in completing the work. If each worker does his or her "own thing," the exposure patterns will vary widely. At a bagging operation in a talc plant, exposure concentrations varied by an order of magnitude depending on the individual work practice of the operators. In a rayon plant, individual differences in work practices permitted some employees to continue work while others had to be removed from the area because of carbon disulfide exposure.

The individual's work practice may interfere with installed engineering controls, as is frequently the case in the operation of vapor phase degreasers. These units are equipped with a low-speed hoist to minimize solvent loss to the room. If such equipment is available, check to see that it is routinely used. The operator may decide to dip parts by hand since it is faster. However, the resulting solvent "pull out" is reflected in high room solvent concentrations.

In this volume, specific work practices are presented when available in the literature. In general, however, the importance of work practices in the control of exposures has not been recognized and few comprehensive statements have been published.

1.5.3 Personal Protective Equipment

In the 1970s it was anticipated that the utilization of personal protective equipment, including respirators, would decrease with the advent of OSHA and the increased emphasis on engineering control. In fact, the use of such equipment has expanded.

The application of respiratory protection is described in regulatory documents and in an application guide for respirators based on the NIOSH/OSHA Standard Completion Program (NIOSH,1978). The use of other protective equipment is less precisely defined, but useful guidelines are available. In this book comments are made on critical applications of personal protective equipment in processes such as welding; however, routine applications are not mentioned since they are thoroughly covered in other publications.

In reviewing the application of respirators in the plant, one should review not only the appropriateness of the respirator issued to the worker, but the total respiratory protection program. The most effective procedure to ensure proper utilization of equipment for a given process is to specify its use as a part of manufacturing process instructions. One can evaluate qualitatively the effectiveness of the personal protective equipment program by noting whether the equipment is treated and stored like a valuable tool. If this is done, a good program is probably in place. If the equipment is hanging from a valve stem or thrown in the bottom of a locker, it is probably not an effective program.

From the 1950s to the 1970s the most frustrating part of this industrial hygienist's job was the selection of protective clothing, especially gloves. In the 1990s excellent advice is available, based on permeability data generated by independent laboratories and manufacturers (Schwope et al., 1987).

1.6 EVIDENCE OF EXPOSURE

It is frequently stated that an experienced person can use his or her vision and sense of smell to identify and estimate the concentration of a contaminant. This is an overstatement. One can just see a 25-μm particle under ideal lighting conditions. In a plant one cannot, therefore, see respirable dust of less than 10 μm unless a dense cloud of dust, mist, or fume is generated. Small particles can be identified by light scatter using a window or a portable lamp as the light source. This simple technique is useful in engineering control, but one cannot use it to establish dust concentrations.

The presence of gases and vapors may be identified by odor or irritation, and sources of information on odor threshold data are noted in Appendix B. These sources should be part of the desk references of the occupational health specialist.

1.7 INFORMATION SOURCES

Lists of the OSHA Permissible Exposure Limits (PELs), NIOSH Recommended Exposure Limits (RELs), and ACGIH Threshold Limit Values (TLVs) are not included in this book since these occupational exposure limits are continuously revised and can be obtained easily from other sources. This is not a volume on the toxicity of industrial materials; other sources are available on the effects of exposure to contaminants. In the introduction to each chapter an attempt is made to establish the magnitude of the occupational health problem in each industrial segment by providing a rough estimate of the number of workers involved and to establish the reality of the disease in that population, by including a selected summary of recent epidemiological studies.

The physical forms of air contaminants released from each process are noted in the text and defined in Appendix C. This information is necessary for assessing exposure and evaluating the appropriateness of air cleaning equipment.

1.8 FIELD NOTES

Although this volume is concerned only with recognition of potential health hazards preparatory to later evaluation and control, one should not discount the need for reporting field observations in this phase of the work. A flow sheet and a diagram of the plant identifying the processes, workers exposed, and control techniques are necessary for proper reporting. The nomenclature used in the plant must be referenced to standard industry terminology. The raw materials and input chemicals used in the process, the intermediate chemical by-products, and the final product must be identified. The release points must be noted on the diagram of the process. The type of ventilation, dilution, or local exhaust must be noted with simple line sketches. A qualitative assessment of the ventilation system should be included in the field notes. Work practice and personal protection methods noted should also be included.

REFERENCES

ACGIH (1992), *Industrial Ventilation, A Manual of Recommended Practice*, 21st ed., Committee on Industrial Ventilation, American Conference of Governmental Industrial Hygienists, Cincinnati, OH.

AIHA (1993), *Who's Who in Industrial Hygiene*, American Industrial Hygiene Association, Fairfax, VA.

BOHS (1987), *Controlling Airborne Contaminants in the Workplace*, BOHS Technical Guide No. 7, British Occupational Hygiene Society, Science Reviews Ltd., Northwood, Middlesex, UK.

Burgess, W. A. (1994), "Philosophy of Management of Engineering Controls," in *Patty's Industrial Hygiene and Toxicology*, Vol. 3D, 3rd ed., L. J. Cralley, L. V. Cralley, and R. J. Harris, Eds., Wiley, New York.

Burgess, W. A., Ellenbecker, M. J., and Treitman, R. D. (1989). *Ventilation for Control of the Work Environment*, Wiley, New York.

Burton, D. J. (1989), *Industrial Ventilation Workbook*, DJBA, Inc., Salt Lake City, UT.

Clayton, G. D. and Clayton, F. E., Eds. (1991), *Patty's Industrial Hygiene and Technology*, Vol. 1, Parts A and B, Wiley, New York

NIOSH (1978), *Pocket Guide to Chemical Hazards*, NIOSH Pub. No. 78-210, National Institute for Occupational Safety and Health, Cincinnati, OH.

Roach, S. A. (1992), *Health Risks From Hazardous Substances At Work*, Pergamon Press, Oxford.

Schwope, A. D., Costas, P. P., Jackson, J. O., and Weitzman, D. J. (1987), *Guidelines for Selection of Chemical Protective Clothing*, 3rd ed., American Conference of Governmental Industrial Hygienists, Cincinnati, OH.

PART TWO

METALS PRODUCTION

CHAPTER 2

Metals Production—Aluminum, Iron, and Steel

2.1 ALUMINUM

The size and complexity of a primary aluminum production operation is best appreciated by seeing the overall view of a potroom (Figure 2.1). In one production facility described by NIOSH (1988), there were 6 potrooms located in 12 buildings. Each building was 1000 ft long and housed 86 cells or pots for a total of 1032 pots. The facility produced about 1000 tons of aluminum per day, and employed 1400 production and salaried workers. The primary aluminum industry has been the subject of a series of epidemiological studies. Gibbs (1985) and Armstrong et al. (1986) have identified excess lung and bladder cancer respectively in Soderberg potroom workers.

2.1.1 Raw Materials

Aluminum is produced by the electrolytic reduction of alumina (Al_2O_3) which is obtained from bauxite, an ore produced primarily in South America and Australia. Bauxite is an earthy-white to reddish mineral composed of Al_2O_3, Fe_2O_3, TiO_2 and SiO_2. The highest grade ore contains 55% Al_2O_3 and has a maximum of 8% SiO_2.

The process flow in the manufacture of aluminum is shown in Figure 2.2. The bauxite is first washed to remove clay and other waste and then dried prior to being ground in a ball mill to a defined particle size. It is refined by dissolving the bauxite in a hot caustic solution, precipitating the purified aluminum hydroxide, and calcining the hydrate to form Al_2O_3 or alumina.

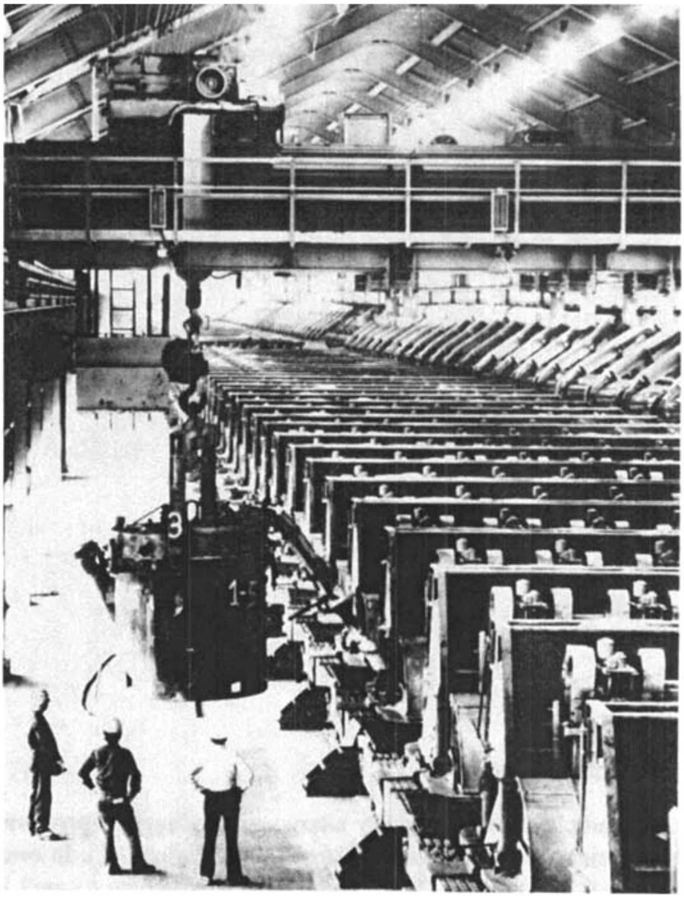

Figure 2.1 Potroom of a large aluminum production facility showing molten aluminum being siphoned from one of 198 pots. Source: Courtesy of The Aluminum Association, Washington, D.C.

The handling of the ore and alumina creates a potential dust problem, which is readily controlled by engineering methods. The alkaline solution poses problems that may range from simple dermatoses to serious chemical burns. Rigorous housekeeping procedures must be established, personal protective equipment worn, and personal cleanliness encouraged.

2.1.2 Electrolytic Reduction of Alumina.

The alumina is converted to aluminum in a reduction cell or pot as shown in Figure 2.3 (EPA, 1973). A number of these pots are arranged in lines in a potroom. The alumina is dissolved in cryolite (Na_3AlF_6); at an operating temperature of 980°C (1800°F), cryolite can dissolve up to 20% of alumina. Fluorspar (CaF_2) is added to the bath to lower the melting point of the mix and aluminum fluoride (AlF_2) is

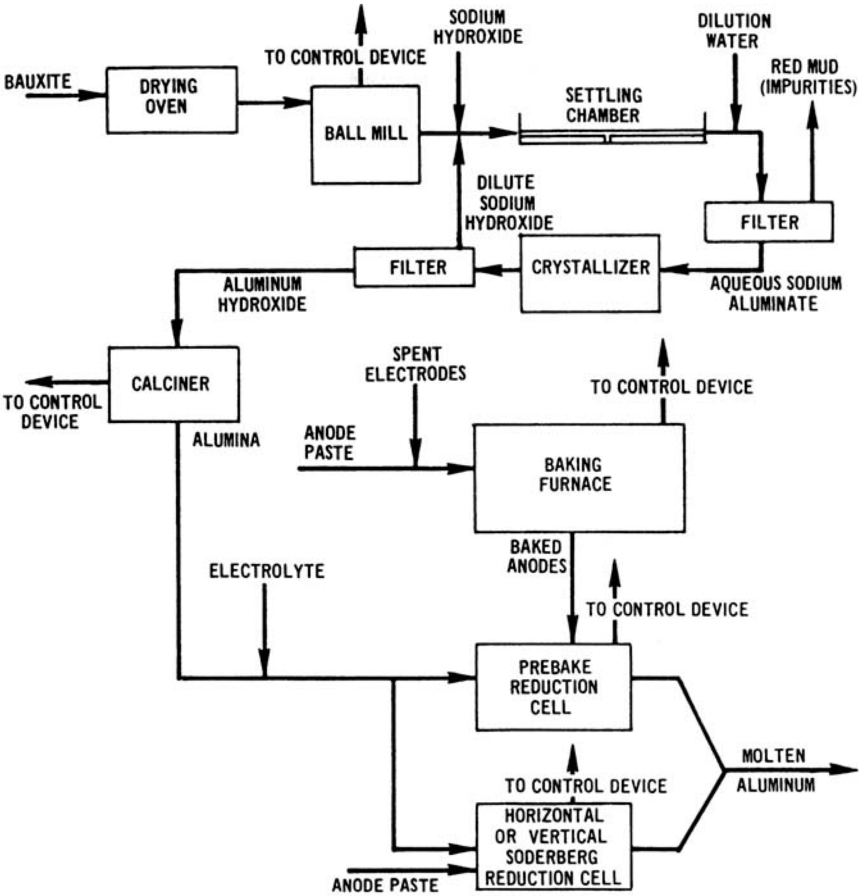

Figure 2.2 Process flow for the production of aluminum. Source: EPA, 1973.

added to increase the efficiency of the cell. These additives present the potential for the release of fluorides to the room. The steel cell has an inner lining of carbon that acts as the cathode and a consumable anode made of petroleum coke and pitch is gradually burned, releasing a variety of air contaminants including polycyclic aromatic hydrocarbons. The low voltage (4–6 V)—high amperage (120,000–150,000 A) direct current passing through the cryolite–alumina bath reduces the alumina to aluminum metal and oxygen. The resulting molten metal pools at the bottom of the cell and is siphoned off periodically, alumina is fed to the cell from hoppers, and cryolite and the consumable anodes are replaced. For each ton of aluminum metal produced, approximately 2 tons of alumina are required. The oxygen released at the anode forms carbon monoxide and carbon dioxide. In addition to CO and CO_2, the aluminum reduction cell releases polynuclear aromatic hydrocarbons from the consumable anode, fluoride compounds from the cryolite, fluorspar, and aluminum fluoride, and particulates from the handling of various granular materials.

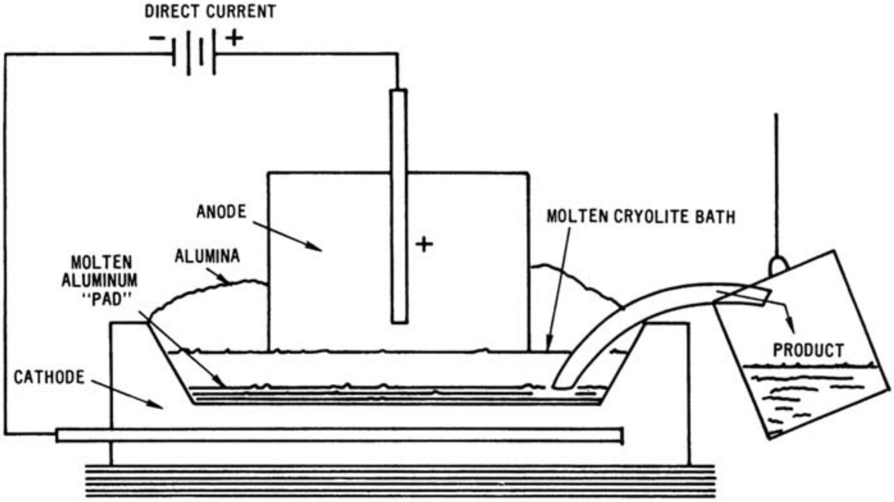

Figure 2.3 Schematic of an electrolytic reduction cell.

The cell can be operated with either a prebaked anode or an anode material that cures in place. In the prebake process, the anodes are formed in a separate facility by blending finely ground petroleum coke with a hot pitch binder (Figure 2.4). This thick paste is then molded under pressure to form a "green" anode. The anode form is baked at 1100–1200°C (1830–2190°F) for several days, releasing particulates, coal tar pitch volatiles (CTPV), sulfur dioxide, carbon monoxide, and other contaminants. After baking, short steel anode rods or stubs are positioned in preformed holes in the anodes and cast iron is poured in the interspace to position them. During the manufacture of the prebaked cells, the workers are exposed to

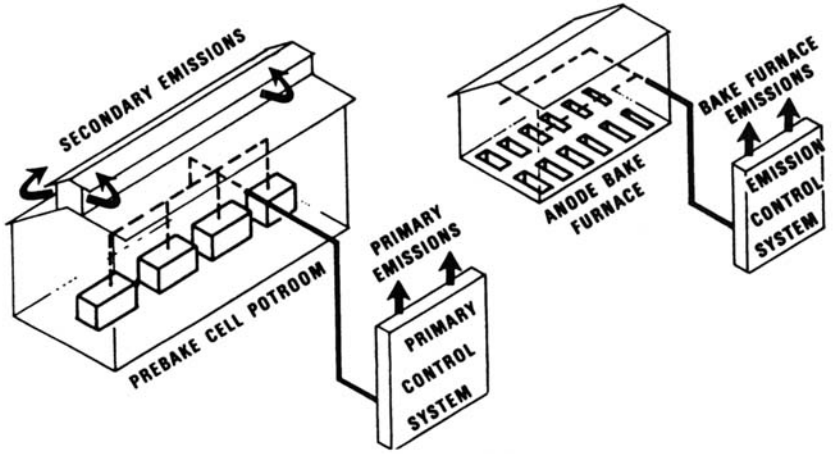

Figure 2.4 Prebake anode facility. Source: EPA, 1974.

dust with a significant concentration of benzene-soluble particulates. Cell anodes are replaced by carbon setters and pot operators every 20–30 days.

The prebake cells are designed for either center or side feeding. In the center feed configuration shown in Figure 2.5, an automated crust breaker is used to break the crust when charging the alumina. In side-charge cells, the doors between the anodes must be opened to manually break the crust and charge fresh alumina. This operation permits the release of air contaminants from the cell to the potrooms. When sufficient aluminum has been formed by the reduction of the alumina, the molten metal is siphoned off the cell.

In the more common Soderberg reduction cell the anode paste is baked in place. An anode paste is made from petroleum coke and pitch and is taken directly to the cell to replenish the anode material or it is formed into briquettes for ease in handling. The Soderberg cell shown in Figure 2.6 has current-carrying steel studs immersed in the anode paste in a vertical configuration, hence the name vertical-stud Soderberg. Gases released from the anode are collected by a skirt hood and burned off as shown in Figure 2.6. For improved control, secondary hoods are sometimes installed.

In a second cell design, horizontal-stud Sodenberg, the studs enter the anode paste from the side. This design requires a complete hood over the cell to capture the off-gases. When work is required on the cell, hood access doors must be opened, permitting release of air contaminants. Horizontal-stud Soderberg cells emit approximately 6 times more polycyclic aromatic hydrocarbons than vertical stud cells.

The stud pullers and the anode men (see Table 2.1) work from catwalks on the top of the cells of the vertical-stud Sodenberg. The workers on the horizontal-stud cells use dollies at floor level to set and remove studs; the anode men maintain anode height by adjustment of the cell forms. In addition to heat stress, the potroom workers are exposed to fluorides, polycyclic aromatic hydrocarbons, sulfur dioxide, and carbon monoxide.

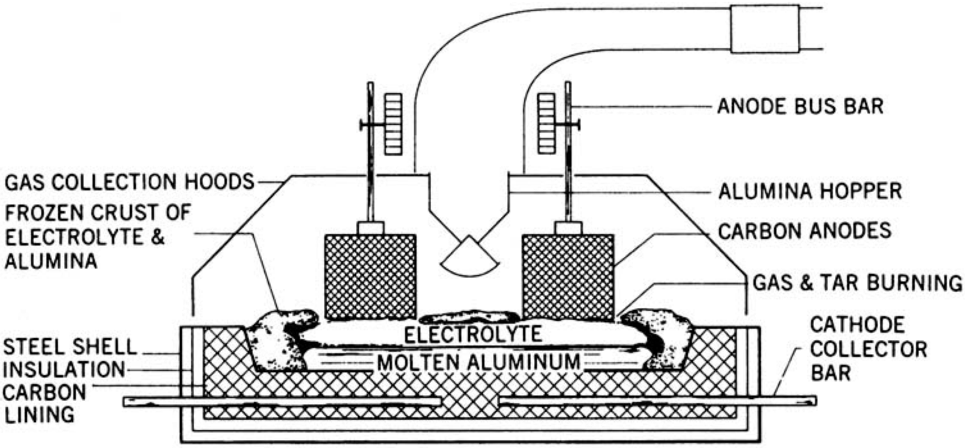

Figure 2.5 Prebake reduction cell with center alumina feed. Source: Schuler and Bierbaum, 1974.

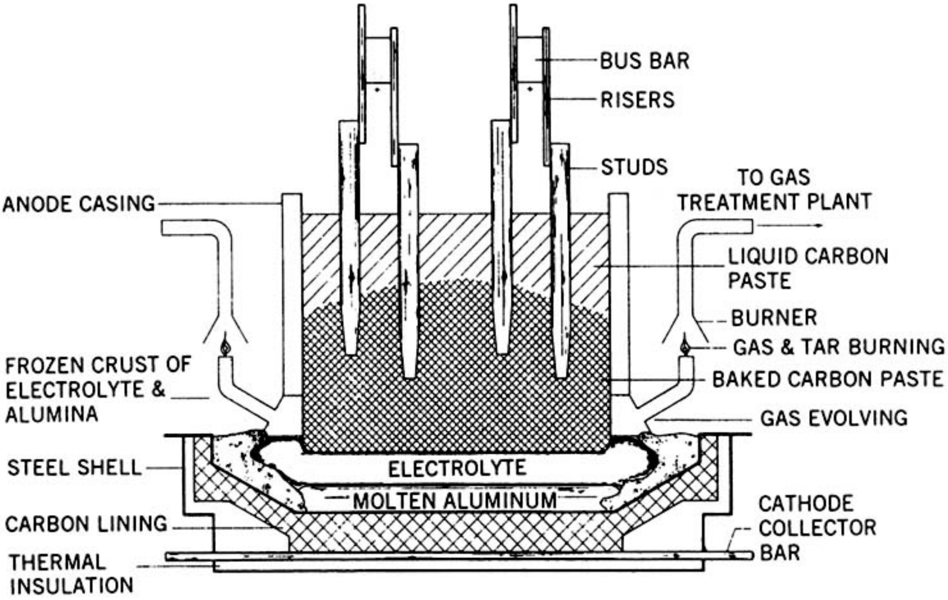

Figure 2.6 Vertical-stud Soderberg electrolytic reduction cell. Source: Schuler and Bierbaum, 1974.

A comprehensive review of applicable controls by NIOSH (1983) includes prebake and both vertical and horizontal cells.

2.1.3 Exposure Profile

A tabulation of exposures in primary aluminum production include alumina dust, particulate and gaseous fluorides, carbon monoxide, sulfur dioxide, polycyclic aromatic hydrocarbons, heat stress, magnetic fields, vibration, and shift work (Eduard and Lie, 1981). A comprehensive review of the air-sampling history in primary aluminum production is presented by IARC (1984, 1987). Selected studies have been included for discussion here to indicate the range of occupational health issues faced in this industry and the great variability in the severity of exposure.

In a NIOSH Health Hazard Evaluation of potrooms, investigators found that CTPVs exceeded 0.1 mg/m^3 in more than one third of the personal air samples (NIOSH, 1978). Ten percent of the samples exceeded 10 mg/m^3 for total particulates. None of the fluoride samples exceeded 2.5 mg/m^3; however, approximately one half of the sulfur dioxide samples exceeded the occupational exposure limit of 3 ppm.

Bjorseth et al. (1981) conducted an extensive study of a relatively new Soderberg plant in Norway with vertical pin electrodes and a separate paste plant. A series of 6-hr personal air samples indicated the highest concentrations of polycyclic aromatic hydrocarbons (300–1600 μg/m^3) were in a potroom equipped with a clean air control room. The occupational exposure limits for polycyclic aromatic hydrocarbons in Norway is 40 μg/m^3. In the United States and a number of

TABLE 2.1 Jobs and Number of Potroom Workers per Crew

Job Category	Crew	Number	Activity
Contractors	Day	6	Cleaning
Point crew	Day	4	Cutting points under anode
Crucible cleaners	Day	4	Cleaning of crucibles with siphon
Samplers	Day	4	Sampling of cryolite and bath
Grinder	Day	1	Stamping cryolite
Spike Quality Controllers	Day	2	Efficiency, length, and quality of spikes
Foremen	Day	1	Supervising
Contractors	Rotation	2	Cleaning
Potmen (pluggers/potsealers)	Rotation	12	Adding of alumina, crust breaking, and pot sealing
Tappers	Rotation	2	Tapping of produced aluminum through vacuum
Crane operators	Rotation	3	2 electrode crane operators
Electrode men	Rotation	4	Spike setting, jack slipping, and other work concerning electrode (anode and spikes)
Measurement men	Rotation	4	Temperature measurements, current measurements (on pot); metal quality (Si, Fe) and skimming of pots
Foremen	Rotation	2	Supervising

Source: Ny et al. (1993). Courtesy of American Industrial Hygiene Association.

other countries, the occupational exposure limit for this exposure is expressed as 0.2 mg/m^3 of CTPV measured as the benzene soluble fraction (BSF) of the particulate. In Finland, Sweden, and Germany the occupational exposure limits are 10, 5, and 5 ug/m^3 of benz(a)pyrene respectively.

The use of the benzene soluble fraction (BSF) method of analysis for coal tar pitch volatiles (CTPVs) has serious deficiencies when applied to the assessment of airborne polycyclic aromatic hydrocarbons. Balya and Danchik (1984) have demonstrated the value of gas and liquid chromatography used in conjunction with the BSF method to define total particulates and to separate polycyclic aromatic hydrocarbons from oil in aluminum potroom samples.

Particulate air samples collected in Soderberg potrooms and anode paste plants were evaluated for mutagenicity in a *Salmonella* reversion assay (Krokje et al., 1985). In both areas, samples contained mutagens, with the mutagen–air concentration relationship more positive for potroom samples than for anode paste plant samples.The concentrations of polycyclic aromatic hydrocarbons varied widely in this study, from 4 to 4150 μg/m^3 in the potroom and 5–1200 μg/m^3 in the anode paste plant.

Ny et al. (1993) make a strong case for biological monitoring of polycyclic aromatic hydrocarbons since the procedure complements the information obtained by air sampling and gives better estimates of the uptake of total polycyclic aromatic hydrocarbons. Studies in Norwegian potrooms by Glyseth et al. (1984) have identified airborne fibers as sodium aluminum tetrafluoride fibers with a diameter of less than 0.1 μm and lengths less than 5 μm.

An evaluation of the performance of respirators in horizontal-stud Soderberg potrooms showed that 95% of the workplace protection factors were above 275 for helmeted, powered, air-purifying respirators and above 9 for half-mask, air purifying devices (Gaboury et al., 1993). Personnel wearing the half-mask respirators were clean-shaven and had a quantitative fit test before the field study. All inside-respirator particulate concentrations were less than 0.5 mg/m^3.

A review of the radiant energy exposures of potroom workers in a large aluminum reduction plant in the United States included actinic UV radiation (200–315 nm), near UV radiation (315–400 nm), visible radiation (400–760 nm), and IR radiation (NIOSH, 1988). Infrared exposures exceeding the ACGIH TLV of 10 mW/cm^2 occurred at locations near open pot doors, at vats holding molten aluminum, and during anode replacement. Whole-body static magnetic fields exceeded 600 gauss, a widely accepted occupational exposure limit.

A dry-scrubbing technique has been widely accepted in aluminum reduction plants as an air-cleaning device to reduce fluoride emissions in the exhaust from the pots. The fluorides are removed from the exhaust stream by passing it through a dry scubber operated with alumina as the packing material. Periodically, the packing bed material is replaced with new alumina and the recovered material (recovery alumina) is used to charge pots. A study by Eduard and Lie (1981) showed that the total particulate concentration at the workplace is increased from 5.4 mg/ m^3 when the cells are charged with fresh alumina to 7.6 mg/m^3 when the cells were charged with the recovery alumina. There was no statisitical difference in the concentration of polycyclic aromatic hydrocarbons between the two operating conditions. Paralleling the increase in particulate concentration, there was a higher prevalence of work-related medical symptoms when the recovery alumina was used. This increase in dust and off-gas resulting from the use of recovery alumina was also noted by NIOSH investigators, who stressed the importance of the pot hood exhaust system when operating in this mode (NIOSH, 1978).

2.2 IRON AND STEEL

Iron and steel manufacturing presents one of the most diversified sets of occupational health problems of any industry. The modern integrated steel plant includes all operations from the initial handling of coal and ore to the loading of the finished product (Figure 2.7). The major air contaminants encountered in the industry are listed in Table 2.2. In this section special attention is given to coke production, conventional blast furnace production of pig iron, basic oxygen furnace refining of steel, and continuous casting.

2.2.1 Intermediates and Products

Pig iron, the principal intermediate in steel production, is made from iron ore, limestone, and coke reacted in the blast furnace. This intermediate contains excess carbon, manganese, phosphorous, sulfur, and silicon. It is not used directly as a product but is converted into cast iron or steel.

Steel is formed in the basic oxygen or electric furnace. The conversion from iron to steel is a refining process in which the carbon content is fixed at a lower percentage and certain other elements are reduced in composition. Cast iron from the blast furnace contains about 4% by weight of carbon; this content will be reduced to 0.02–0.04% at the basic oxygen furnace (BOF), and if secondary refining takes place, the carbon content will be as low as 0.002%.

Specific alloy steels may be fabricated by the addition of alloying metals. Alloy steels are either those to which elements other than carbon are added or carbon steels containing greater than 1.65% manganese, 0.60% silicon, or 0.60% copper. These steels frequently have alloying materials that permit the alloy steel to achieve improved mechanical properties by heat treatment. The elements frequently added to carbon steel to form alloy steels include vanadium, chromium, molybdenum, aluminum, and nickel. Other materials including cobalt, columbium, and tungsten are found in special steel alloys made for cutting tools.

2.2.2 Manufacture of Coke

Bituminous coal is crushed, cleaned, dried, and shipped to the coke plant. In by-product coke ovens, the coal is baked in a slot oven in the absence of air at temperatures of approximately 1090°C (2000°F) for 14–20 hr. The oven is maintained under a vacuum, and as the volatile materials are driven off, they are collected and recovered at the by-product plant (see Figure 2.8).

Coke oven workers are exposed to a range of particulates, gases, and vapors probably not equaled in any other industrial setting. It is estimated that one quar-

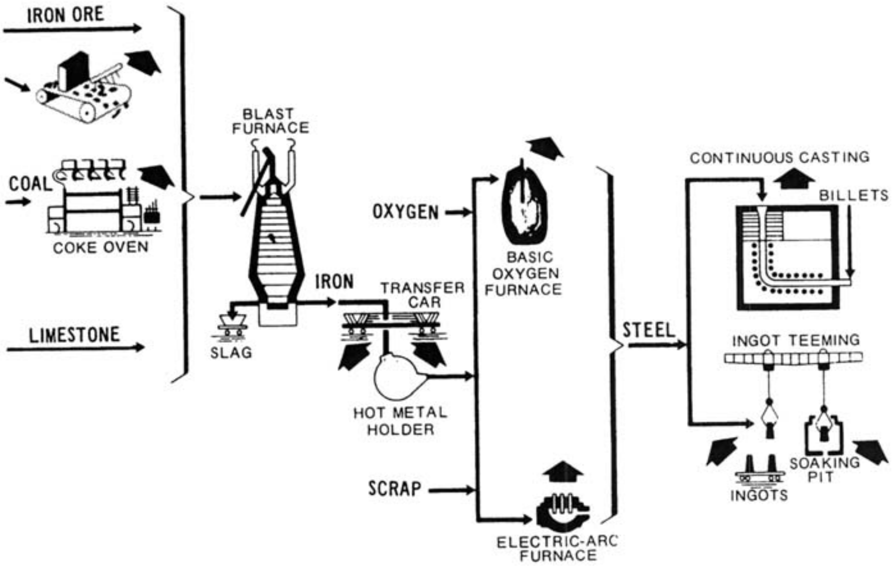

Figure 2.7 Flow diagram of iron and steel manufacture. Source: Courtesy of the American Iron and Steel Institute.

TABLE 2.2 **Major Air Contaminants in Iron and Steel Industry**

Operation	Exposure
Dust	
Mining	Ore and coal dust
Ore sintering and pelletizing	Iron oxide
Coke ovens	Coke oven emissions
Refractory handling	Silica dust
Foundries	Silica sand
Metal fume	
Furnaces	Iron oxide
Scarfing operations	Iron oxide
Scrap preparation	Lead fume
Galvanizing	Flux fume, zinc
Leaded and ferromanganese steels	Lead and manganese fume
Gases and vapors	
Blast furnace	Fluorides, CO
Coking operation	CO, SO_2, H_2S
Welding	Ozone, oxides of nitrogen
Maintenance and cleaning motors	Solvent vapors
Mists	
Pickling	Sulfuric acid mist
Plating	Various
Spray painting	Lead paints spray mist

ter of the total weight of coal is evolved as gases and vapors in the coking processes and that over 2000 different chemical species may be formed. The principal air contaminants include CO, CO_2, H_2S, SO_2, NH_3, aromatic hydrocarbons, and polynuclear aromatic hydrocarbons. One ton of coal will produce 0.030 m^3 (8 gal) of tar, 9 kg (20 lb) of ammonium sulfate, 170 m^3 (6000 ft^3) of surplus coal gas, 0.01 m^3 (3 gal) of light oil, and 0.056–0.11 m^3 (15–30 gal) of ammonia liquid.

An epidemiological study of the steel industry conducted in the 1960s revealed that coke oven workers employed for more than 5 yr had a lung cancer mortality rate 3.5 times that expected, the rate for topside workers was 10 times that expected (Lloyd, 1971; Redmond et al., 1972). The excess lung cancer is believed to be correlated with the concentration of coke oven particulate emissions identified as the BSF of the airborne particulate, which includes known carcinogens such as benz(a)pyrene, benz-fluoranthene, and chrysene.

The coke plant shown in Figure 2.8 consists of a stockpile of crushed bituminous coal, a battery of coke ovens, and a by-product plant. The coke battery consists of a number of vertical slot ovens that are 8–15 m (25–50 ft) long, 3–8 m (10–25 ft) high, and 35–60 cm (14–24 in.) wide (Figure 2.9). These slot ovens alternate with similar geometric spaces heated by the burning of coke gas produced during the operation. A series of round charging ports provided with lids in the top of the oven permit the charging of 15–20 tons of coal to one slot oven. The ends of the ovens are large refractory doors.

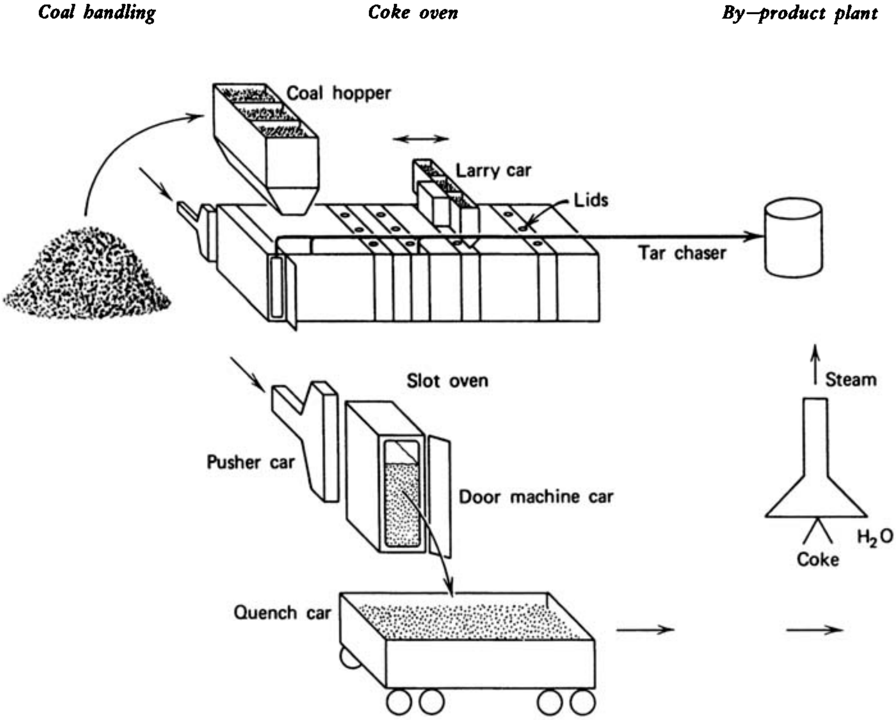

Figure 2.8 Schematic of coke oven plant.

In evaluating worker exposure on coke ovens, one must be acquainted with the various jobs. Coal is dumped from a storage bunker to the hopper of a larry car that runs on rails on the top of the battery. The larry car operator moves the car to a given oven (Figure 2.10). A lidsman manually removes the lid from that oven, the car is positioned, and the coal is dumped to the oven. At this time there may be a violent eruption of dust and some combustion, with exposure of both the larry car operator and lidsman to a heavy contaminant cloud. The larry car returns to the bunker station for another load of coal. The lidsman sweeps up the loose coal, replaces the lids, and seals the lids with a luting (clay–water) mixture. This activity is repeated many times during the shift. In some modern batteries the coal is transferred by pipeline directly to the oven.

The coal is baked at 1090°C (2000°F) for 16–20 hr. During this period off-gases are collected by a vacuum main and recovered in the by-product plant. At the end of the coking period, the ends of the slot oven are opened and the pusher car operator positions that equipment at the oven. A ram mounted on the car pushes the red hot coke out of the oven into a quench car (Figure 2.11) The coke is moved to the quench tower by the quench car operator, and the coke is deluged with water. After quenching, it is dumped into a conveyor for transport.

In addition to the larry car operator and the lidsmen, the other topside workers include a luterman, gooseneck cleaner, and various maintenance personnel.

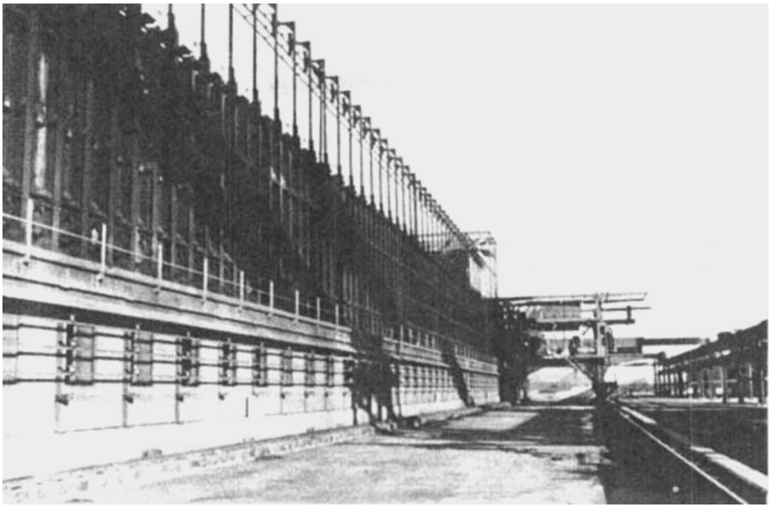

Figure 2.9 Side view of coke oven battery with pusher car in the distance.

The so-called sidemen include the operators of the pusher car and the quench car and door maintenance personnel. The coke oven worker is exposed to coal dust, particulate coke oven emissions with a significant benzene-soluble component, carbon monoxide, hydrogen sulfide, sulfur dioxide, and a range of other contaminants in low concentrations. Heat stress is also a significant physical hazard on coke ovens.

Exposures in by-product plants include carbon monoxide, ammonia, benzene, carbon disulfide, and other contaminants. Since the operations are conducted in an

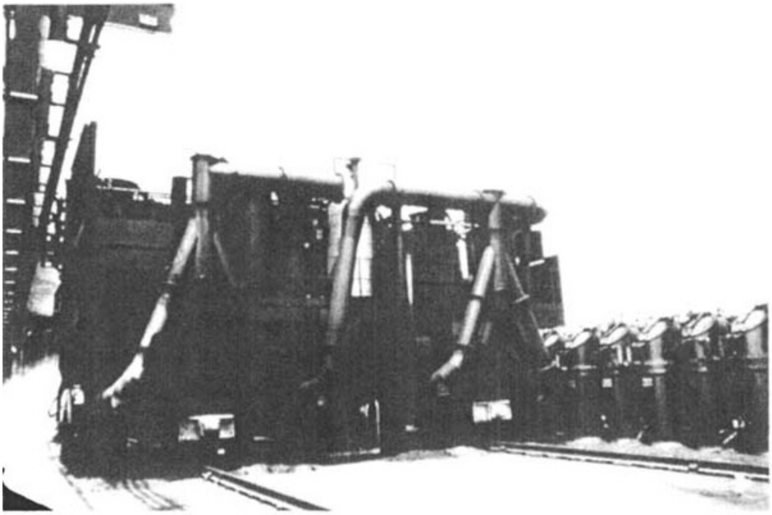

Figure 2.10 Top side of coke oven battery with larry car preparing to charge a slot oven.

enclosed system, the principal difficulty is unexpected leakage, resulting in exposure to high concentrations for brief periods. Plant maintenance, intelligent supervision, and thorough training are required to ensure safety with respect to these exposures.

A NIOSH publication presents the available control techniques for the coke oven environment (NIOSH, 1980). The proposed priority list for controls includes side door leaks, topside leaks, charging emissions, pushing emissions, and coal shoveling practices. The principal engineering controls include staged charging to reduce charging emissions, pipeline charging that would eliminate the topside jobs of larry car operators and lidsmen, mechanical lid lifters for larry cars, and dry rather than water quench of the coke. Provision of jumper lines that place the charging oven under negative pressure has demonstrated value. The use of air-conditioned, enclosed, stand-by pulpits and restrooms with a filtered air supply can significantly reduce exposure. Fugitive leaks from lids, standpipes, goosenecks, and doors can be reduced by proper maintenance and luting. Installation of sheds over the ovens as a means of environmental pollutant control increases worker exposure and does not appear to be an appropriate technique.

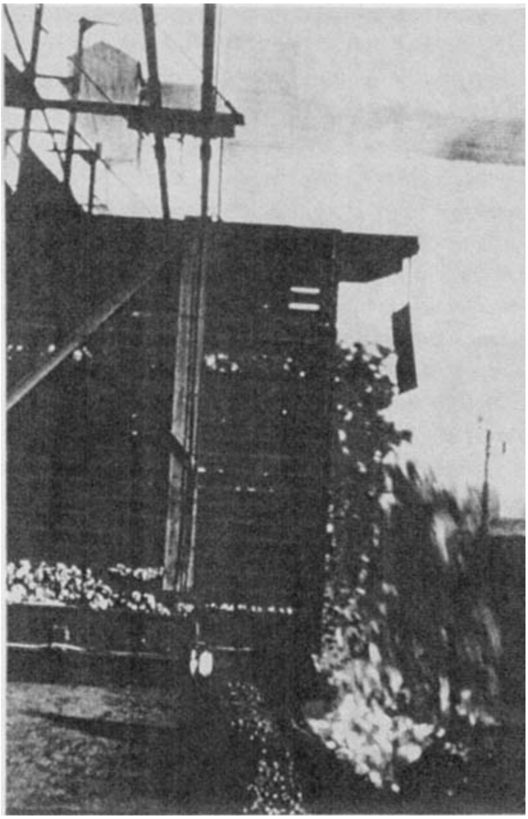

Figure 2.11 Pushing coke from battery preparatory to quenching.

2.2.3 Blast Furnace

Taconite, a common iron ore in the United States, contains 23–25% iron. The ore is crushed and beneficiated by either magnetic or flotation methods and is transported to the steel mill as pelletized material containing 60–70% iron. Direct reduction techniques have now been introduced which provide material with an iron content in excess of 90% and permit bypassing the blast furnace.

In the handling of the ore, many "fines" or small particles are generated. This material, with recovered blast furnace dust, is mixed with coal dust or "breeze," spread on a traveling grate, and "fixed" in a sintering furnace. After sintering, this porous cake is crushed and used as part of the blast furnace charge. Major dust hazards may occur in sintering operations, and these require control by local exhaust ventilation.

The iron ore and limestone are stockpiled, weighed, and loaded into skip cars at the stockhouse for the charging of the blast furnace, as shown in Figure 2.12. Charging of coke frequently is done automatically. The raw materials are charged to the blast furnace, a cylindric tower lined with refractory brick, through a charging "lock" consisting of small and large bells. The raw materials increase in temperature as they sink down into the stack of the furnace. Oxygen is removed from the ore in the top section of the furnace, and midway down the flux, limestone reacts with impurities to form a slag that absorbs the ash from the coke.

The coke reaching the base of the stack burns, causing smelting reactions that release iron from the ore (the ore is reduced and the carbon in the coke is oxidized). Carbon monoxide formed during burning of the coke is a reducing gas that flows upward, burning and reducing the iron oxide to iron. At the bottom of the furnace there is a pool of molten iron 1.2–1.5 m (4–5 ft) deep, with the slag floating on top. The slag is drained off through the slag notch to a ladle, and the molten iron is removed at the tap hole to a hot metal car for transport to steelmaking facilities such as the open hearth or basic oxygen furnace. The vent gases from the blast furnace are used to preheat the blast furnace combustion air.

The blast furnaces present a significant exposure to carbon monoxide, especially during maintenance operations, and several deaths have occurred in the industry from this exposure. Concentrations of carbon monoxide should be monitored before maintenance operations commence, and self-contained breathing apparatuses must be available for escape purposes.

2.2.4 Steelmaking

The common steelmaking facilities in the United States are the BOF and the electric furnace. The open-hearth furnace, once a feature of all steelmaking plants in the United States, has been replaced by the BOF. This furnace, shown in Figure 2.13, is a refractory-lined steel shell supported in horizontal trunnions. The furnace is tilted for charging with steel scrap from a scrap charging car, molten pig iron is introduced into the top of the furnace, and a water-cooled oxygen lance is lowered into position 1.8 m (6 ft) above the metal surface. Oxygen is introduced at both

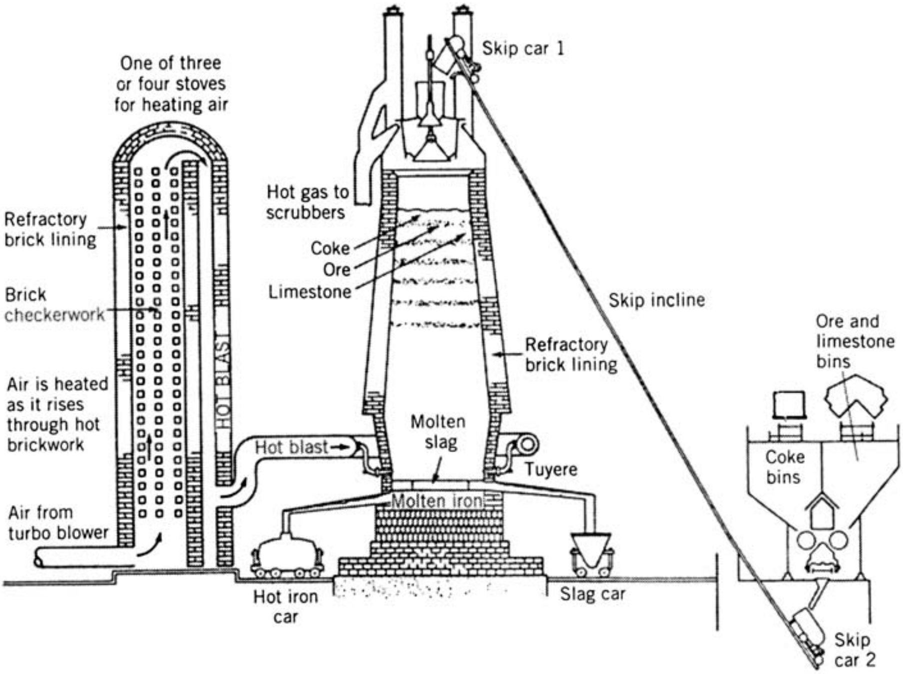

Figure 2.12 Blast furnace facility.

the top and bottom of the furnace in the newest installations. After initial heating, lime and fluorspar are added to the furnace by chute. The oxygen combines with carbon and impurities, and these impurities float off as slag under the action of lime and fluorspar. Alloying metals can be added directly to the heat by chute. A smoke hood is positioned at the throat of the furnace to remove metal fumes. The anticipated problems of exposure to metal fumes, carbon monoxide, heat, and noise are encountered in BOF operations.

In the initial applications of the BOF, the unit was used to achieve complete refining of the steel, including reducing the carbon content, removing of gaseous impurities including oxygen and hydrogen, and adding of alloying metals. In new facilities, the BOF is used only to bring the melt to temperature and gain some initial reduction in carbon content. Secondary refining in a vacuum degasser is now used for final adjustment of carbon content and removal of dissolved gases.

An electric furnace generally is used to produce steel alloys and stainless and specialty steels; it is increasingly being used to make conventional carbon steel. In this furnace three carbon electrodes are positioned in the cavity of the furnace over the charge. The current arcs from one electrode to the charge and then from the charge to the next electrode, providing an intense heat source and melting the solid charge. Limestone and flux are introduced to remove impurities to a slag layer. Carbon is removed by direct oxygen injection.

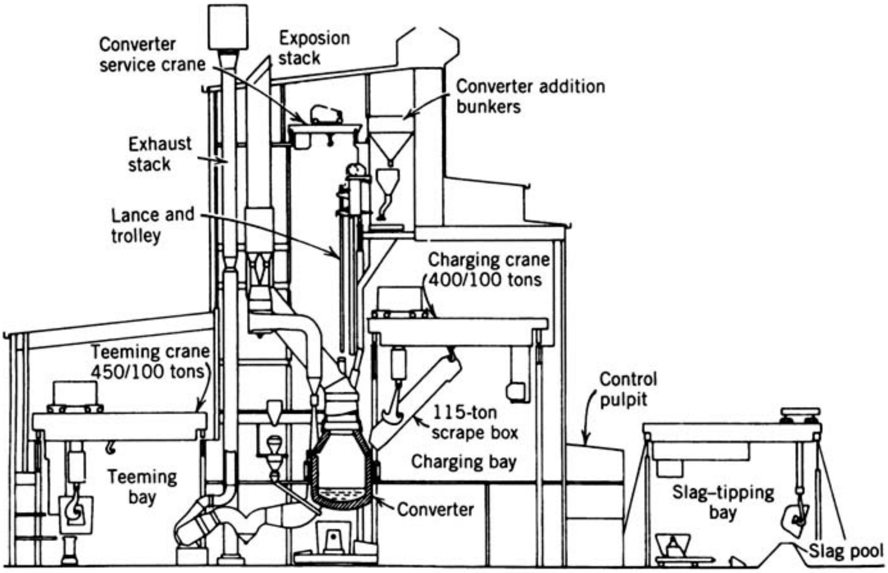

Figure 2.13 Basic oxygen furnace (BOF). Source: *From Engineering Design Problems of Large Iron and Steel Making Furnaces.* ISI Publication 136. Copyright 1970. Used with the permission of the Metals Society, London.

The molten steel produced in the abovementioned furnaces is transformed into steel products in myriad ways (Figure 2.14). Until the1960s, the conventional steelmaking process involved ingot teeming. In this procedure the molten steel in the ladle is poured or "teemed" into cast iron ingot molds. The molds are tapered to facilitate removal of the solid steel. After stripping the mold from the ingot, the ingot is placed in soaking pits or holding furnaces where it is held until a uniform temperature is reached throughout. The ingot is then removed from the soaking pit to a breakdown mill and then to specialty mills to form blooms, slabs, and billets. Blooms have a square cross section, slabs are rectangular, and billets are long with small cross sections.

The pouring of the intermediate ingots and their subsequent reheating was an inefficient and costly procedure. The practice also led to a 15–25% loss of the ingot due to croppage, or the removal of the top of the ingot, which must be cut away if the ingot is to be used for high-quality steel products. In the 1970s and 1980s a number of developments led to continuous casting, the alternative process shown in Figure 2.7. The metal is delivered directly from the BOF or the secondary refining process to the continuous casting area where the molten steel is poured into a large funnel-shaped receiver vessel called a tundish (Figure 2.15). The metal flows from the tundish through a delivery nozzle to a water-cooled copper mold. In a process that sounds unbelievable to a nonmetallurgist, the steel solidifies and forms a skin on the edge of the mold. The metal then flows out to the mold as a strand at a speed that is defined by withdrawal of pinch rolls. Just downstream of

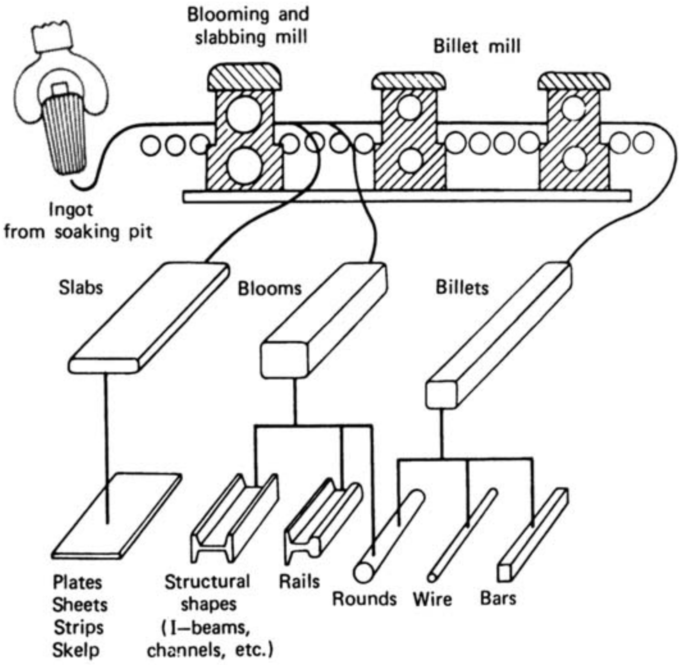

Figure 2.14 Manufacture of steel products. Source: Courtesy of American Iron and Steel Industry.

the mold the strand has a solid skin but a molten interior. At about 30 m (100 ft) from the mold it is solid throughout, and the strand can be directed by rolls to the rolling mills as shown in Figure 2.7.

The intermediate processing of steel includes hot- and cold-rolled mill products, tin mill products, hot-dip galvanizing, structural shapes, and product manufacture of steel rod and wire, pipe, and tubing. The rolling-mill operation is energy intensive and the environment in a conventional mill is noisy and hot with airborne oil mist present.

Gavanizing may be done by hot dip or electrochemically. The steel stock to be galvanized must first be cleaned in an alkali bath and etched with sulfuric or hydrochloric acid. The stock must then be fluxed using zinc chloride, ammoniuum chloride, or a mixture of the two. Dufresne et al. (1988) have characterized the aerosol contaminant from hot dip tanks as smaller than 2 μm and consisting of zinc chloride, zinc oxide, ammonium chloride, and a complex of chlorides. Remijn et al. (1982) studied five hot-dip galvanizing operations in the Netherlands and found the geometric mean concentrations of hydrogen chloride to be 5.3, 4.1, 2.3, 1.8, and 3.4 mg/m^3 based on about 50 samples at each facility. The zinc oxide concentrations were low and averaged less that 0.2 mg/m^3 at each plant. Verma and Shaw (1991) describe the use of 2% nickel in a hot galvanizing bath to improve adherence and appearance. Airborne concentrations of nickel were all well below appropriate occupational exposure limits.

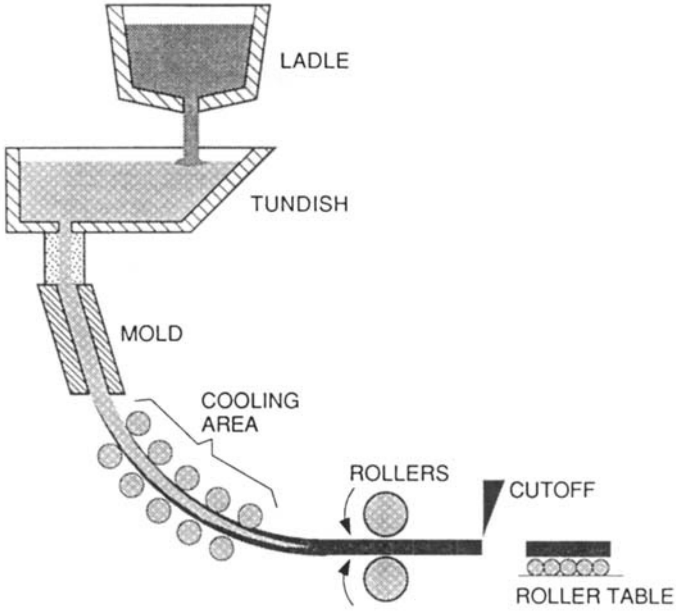

Figure 2.15 The continuous casting process.

A potential lead exposure exists during the production of leaded steel, but control by local exhaust ventilation is possible. Special steels may contain nickel, bismuth, chromium, ferromanganese, tungsten, and molybdenum. Fluorides may be encountered in connection with certain iron ores.

The production of tin plate involves exposure to acids and terneplate also involves the use of lead. Iron and steel plants also have plating, spray painting, and welding operations with the attendant hazards noted in other chapters. Metal fume exposures occur during oxygen injection at blast furnaces and in electric arc furnaces. These emissions require ventilation control and air cleaning.

The major silica hazard occurs during the installation of refractory brick materials containing high concentrations of quartz in the lining of furnaces and ovens.

Heat stress is a problem in coke oven operations, basic steelmaking, and final mill operations. The principal heat load is due to radiation from furnaces and the molten metal. The industry has utilized the following controls:

1. Protective shields for radiation.
2. Air conditioning of control stations, pulpits, and crane cabs.
3. Spot cooling of work sites.
4. Personal protective clothing such as aluminized garments equipped with vortex coolers.

The noise hazards in this industry are pervasive and necessitate a variety of controls, including modifications of equipment, mufflers for air exhaust and intakes, isolation and enclosures, and personal protective devices.

REFERENCES

Armstrong, B. G., Tremblay, C. G., Cyr, D., and Theriault, G.(1986), *Scand. J. Work Environ. Health*, **12**, 486–493.

Balya, D.R. and Danchik, R.S. (1984), Am. Ind. Hyg. Assoc. J., **45**, 260–268.

Bjorseth, A., Bjorseth, O., and Fjeldstad, P.I.E. (1981), *Scand. J. Work Environ. Health*, **7**, 223–232.

Dufresne, A., Perrault, G., Roy, C., Lauzon, J., Michaud, D., and Baril, M. (1988), Ann. Occup. Hyg., **32**, 179–189.

Eduard, W. and Lie, A. (1981), *Scand. J. Work Environ. Health*, **7**, 214–222.

EPA (1973), *Compilation of Air Pollution Emission Factors*, 2nd ed., Publication No. AD-42, US Environmental Protection Agency, Research Triangle Park, NC.

EPA (1974), *Background Information for Standards of Performance: Primary Aluminum Plants*, Vol. 1, US Environmental Protection Agency, Research Triangle Park, NC.

Gaboury, A., Burd, D.H., and Friar, R.S. (1993), *Appl. Occup. Environ. Hyg.*, **8**, 19–25.

Gibbs, G.W. (1985), *J. Occup. Med.*, **27**, 761–770.

Glyseth, B., Bjorseth, O., Dugstad, O. and Gujonnes, J. (1984), *Scand. J. Work Environ. Health*, **10**, 189–195.

IARC (1984), *Monographs on the Evaluation of the Carcinogenic Risk of Chemicals to Humans*, Vol. 34, Part 3, International Agency for Research on Cancer, Lyon, France.

IARC (1987) *Monographs on the Evaluation of the Carcinogenic Risk of Chemicals to Humans, Overall Evaluations of Carcinogenicity: An Updating of IARC Monographs Volumes 1 to 42*. Supplement 7, International Agency for Research on Cancer, Lyon, France.

Krokje, A., Tiltnes, A., Mylius, E., and Gullvag, B. (1985), *Scand. J. Work Environ. Health*, **11**, 311–316.

Lloyd, J.W. (1971), *J. Occup. Med.*, **13**, 53–68.

NIOSH (1978), HETA 78-044-715, Kaiser Aluminum and Chemical Corporation, West Virginia, National Institute for Occupational Safety and Health, Cincinnati, OH.

NIOSH (1980), *Control Technology for Worker Exposure to Coke Oven Emissions*, DHHS (NIOSH) Publ. No. 80-114, National Institute for Occupational Safety and Health, Cincinnati, OH.

NIOSH (1983), *Occupational Health Control Technology for the Primary Aluminum Industry*, DHHS (NIOSH) Publ. No. 83-115, National Institute for Occupational Safety and Health, Cincinnati, OH.

NIOSH (1988), HETA 88-229-1985, Ormet Corp., Hannibal, OH, National Institute for Occupational Safety and Health, Cincinnati, OH.

Ny, E. T., Heederik, D., Kromhout, H., Jongeneelen, F., (1993), *Am. Ind. Hyg. Assoc. J.*, **54**, 277–284.

Redmond, C. K., Ciocco, A., Lloyd, J.W., and Rush, H.W. (1972), *J. Occup. Med.*, **14**, 621–629.

Remijn, B., Koster, P., Houthuijs, D., Boleij, J., Willems, H., Brunekreef, B., Biersteker, K., and Van Loreren, C. (1982), *Ann. Occup. Hyg.*, **25**, 299–307.

Schuler, P. J. and Bierbaum, P.J. (1974), "Environmental Surveys of Aluminum Production Plants," Publ. No. NIOSH 74-101, National Institute for Occupational Safety and Health, Cincinnati, OH.

Verma, D. K., and Shaw, D. S. (1991), *Am. Ind. Hyg. Assoc. J.*, **52**, 511–515.

PART THREE

METAL PREPARATION

CHAPTER 3

Abrasive Blasting

3.1 INTRODUCTION

High pressure air was first used to project abrasive particles at high velocity for cleaning of metal surfaces in 1904. Nearly a century later, abrasive blasting has widespread application in a range of manufacturing, construction, and service activities. It is estimated that there are 100,000 US workers with the job title of abrasive blaster; it is likely that two to three times that number do abrasive blasting as a part of their job function or work with an abrasive blaster in some support function.

In the metalworking industry abrasive blasting is widely used to remove surface coatings, scale, rust or fused sand in preparation for subsequent finishing operations. No other method is as effective and economical for this purpose. The process is also used in intermediate finishing operations to remove flashing, tooling marks, or burns from cast, welded, or machined fabrications and to provide a matte finish to metal parts. In addition, chilled-iron and steel shot are used to peen metal surfaces to improve resistance to fatigue stress, reduce surface porosity, and increase the wearability of parts.

In addition to the preparation of steel structures for painting, abrasive blasting is now widely used for cleaning of wooden and brick buildings. In quarry operations it offers an alternative surfacing technique for architectural stone. Abrasive blasting is applied in lettering stone monuments. Other applications include the etching of glass and the execution of artwork in both stone and metal.

3.2 ABRASIVES

For decades the terms abrasive blasting and sandblasting were used interchangeably. Although sand is still widely used in the United States, there are a large number of other abrasives available for specific applications (Table 3.1). In evaluating worker exposure it is important that the abrasive in use be precisely identified to correctly predict the health hazards.

The common heavy-duty abrasives for metal surfaces are silica sand, metal shot and grit, coal and metallurgical slags, and synthetic abrasives (Table 3.2). Sand is by far the most commonly used abrasive, with metal grit and shot the next most common. For light-duty cleaning of plastic and metal parts where one does not wish to erode the workpiece, a number of ground organic products based on corn, oat, and fruit pits are available in addition to baking soda, glass beads and plastic chips.

3.3 ABRASIVE BLASTING PROCESSES

The three blasting methods of projecting the abrasive are compressed air, hydroblast, and the centrifugal impeller. The most common compressed-air blasting equipment uses the so-called direct pressure method (Figure 3.1). In this system the abrasive receiver or pot is pressurized and the abrasive is forced into the throat of the abrasive blasting nozzle. In an alternative system the pot is open to the atmosphere and the abrasive is siphoned into the throat of the nozzle. In both systems the compressed air fed to the nozzle carries the abrasive to the work surface at velocities in excess of 200 fps. This equipment is commonly used in both outdoor blasting and abrasive blasting enclosures inside the plant. In addition to the person doing the blasting, the crew includes the pot man, who adds abrasive to the pot and ser-

TABLE 3.1 Abrasives in Common Use

Organic materials	Plastic materials
Almond, walnut, and pecan shells	Polystyrene
Coconut shells	Nylon
Corn cobs	
Hardwood dusts	
Olive and peach pits	
Natural abrasives	Synthetic abrasives
Sand	Aluminum oxide
Selected silicates	Silicon carbide
Aluminum oxide	
Selected metals	
Shot—bronze, steel, and stainless steel	
Grit—chilled iron and steel	
Zinc wire pellets	
Metallurgical slags	
Other—dry ice, sodium bicarbonate, and glass beads	

TABLE 3.2 Applications of Abrasives

Abrasives	Facilities (%)
Sand	44.7
Steel shot	16.7
Steel grit	9.7
Alumina	9.3
Flint/garnet	7.0
Glass beads	4.6
Carbides	3.5
Slag	3.1
Organics	1.1

Source: NIOSH (1974).

vices the air compressor. The pot man also has responsibility for cleaning up debris from the blasting operation.

Hydroblasting (Figure 3.2) uses a high-pressure stream of water to convey the abrasive to the work surface. High pressures of 1000–10,000 psig and ultrahigh pressure in excess of 20000 psig are currently in used on this equipment. This operation, which also requires a minimum of two workers, is used principally for outdoor work.

In the centrifugal wheel system shown in Figure 3.3, the abrasive flows to the center of the wheel and is discharged tangentially at high velocity. This unit is normally a component of an abrasive blasting enclosure, as discussed later in this chapter.

3.4 APPLICATIONS

3.4.1 In-plant Containment with ventilation

Abrasive blasting in metal fabrication facilities is conducted in specially designed enclosures with integral systems for recirculation of abrasive, exhaust ventilation, and air cleaning. The enclosure design, application of the unit, ventilation design, and other controls are discussed in this section.

3.4.1.1 Cabinets. A number of manufacturers provide small bench-top or free-standing cabinets for abrasive blasting of small parts in repair or job shops. The units are glove boxes (Figure 3.4) with a number of special features. The cabinet is of heavy steel construction with either a roll-up front panel or a side door for loading the workpiece to be cleaned. The abrasive blasting hose usually enters the top of the cabinet through a rubber star fitting which provides a dust seal. The nozzle is manipulated by the operator using heavy duty rubber gloves while viewing the workpiece through a sealed window. A dust-tight light fixture is installed so that the cabinet can be used for organic abrasives. The cabinet is exhausted at a minimum air flow rate of four air changes per minute. The dust-laden air passes through a cyclone collector and then to a bag house before being released outdoors.

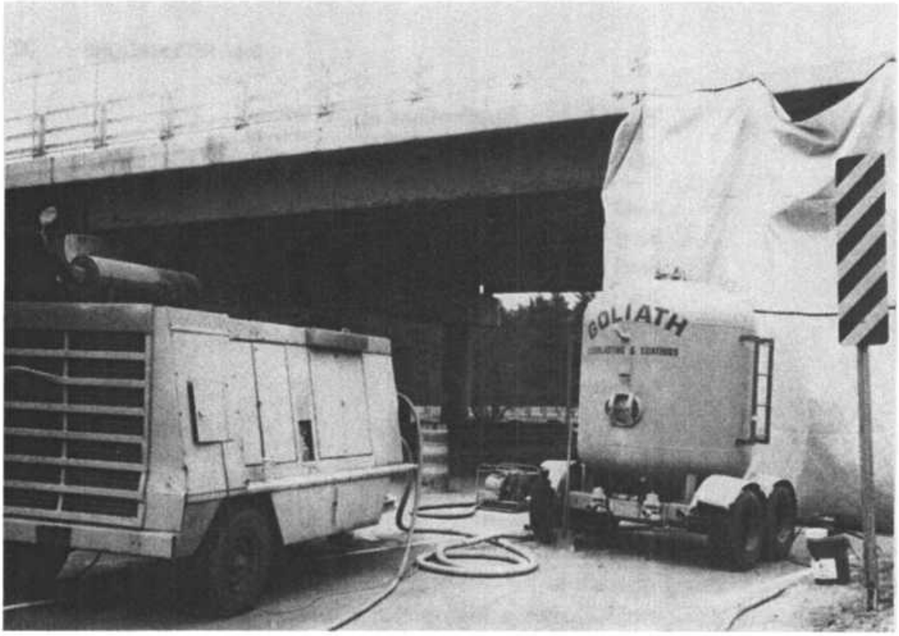
GOLIATH

(*a*)

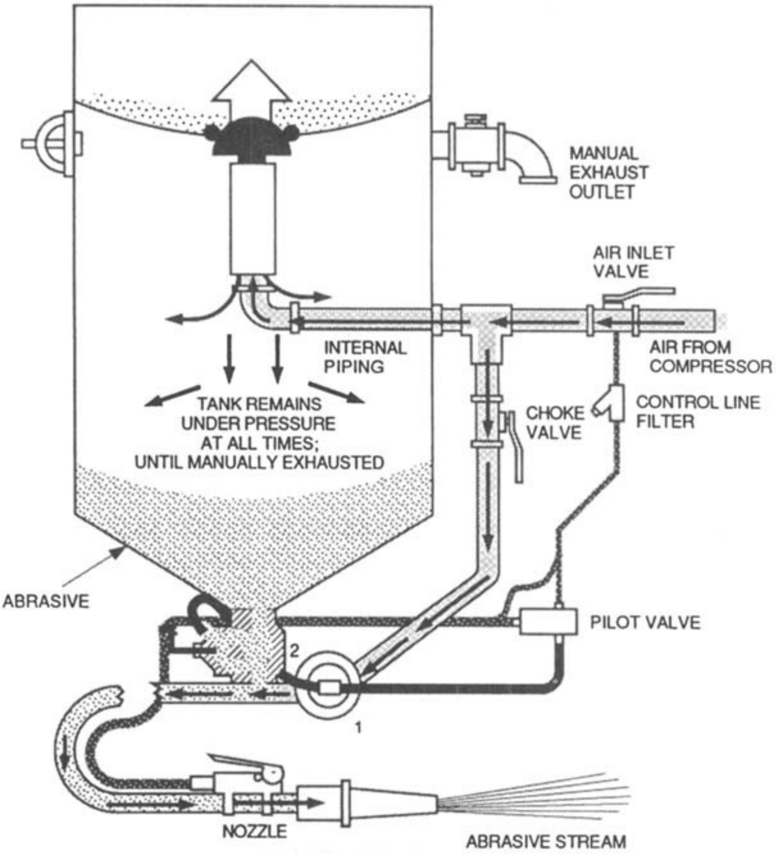
MANUAL
EXHAUST
OUTLET
AIR INLET
VALVE
INTERNAL
PIPING
AIR FROM
COMPRESSOR
TANK REMAINS
UNDER PRESSURE
AT ALL TIMES;
UNTIL MANUALLY EXHAUSTED
CHOKE
VALVE
CONTROL LINE
FILTER
ABRASIVE
PILOT VALVE
2
1
NOZZLE
ABRASIVE STREAM

(*b*)

(c)

Figure 3.1 Site of abrasive blasting operation of a roadway bridge prior to painting. (*a*) Portable air compressor servicing the Goliath abrasive pot. (*b*) Schematic of abrasive pot. High-pressure air from the compressor enters from the right and splits into two main lines immediately after the air inlet valve. One line pressurizes the tank containing the abrasive; the second line picks up the abrasive at the apex of the tank cone and directs the abrasive under pressure to the hand-held nozzle. (*c*) A worker wearing protective clothing and an abrasive blasting hood blasting the bridge structure.

The common abrasives for cabinets are silicon carbide and aluminum oxide. Although ventilation control will normally provide excellent dust control, it is important that an abrasive with low toxicity be chosen since lapses in maintenance of the equipment may result in worker exposure. Silica sand should not be used in this type of equipment. Periodic inspection of gloves, star gasket, door seals, and the structural integrity of the enclosure are important since the exhaust ventilation cannot control the dust projected through a major opening. The operator need not wear a respiratory protective device when working with a properly designed and maintained cabinet.

The abrasive and debris from the workpiece that settles out in the trap may constitute an important dust exposure during cleanout and maintenance, hence personnel should use appropriate work practices and wear a respirator. In addition to the dust exposure from the abrasive and the workpiece surface, the worker is exposed to both vibration from the hand-held nozzle and noise from the jet blast. In general, the full-shift TWA will not exceed 85 dBA on a properly maintained abrasive blasting cabinet, but this should be confirmed by measurement.

3.4.1.2 Tumble or Barrel Blasting. The abrasive blasting cabinets described above are not efficient for large lots of small parts. In this case the parts are processed in a tumble blasting barrel of the type shown in Figure 3.5. The hori-

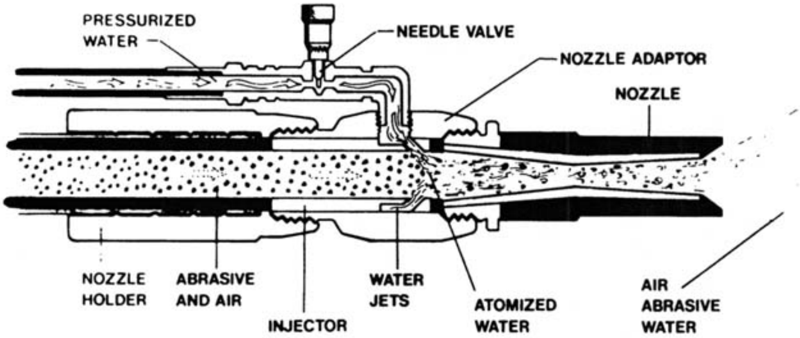

Figure 3.2 A nozzle adaptor to convert a dry-blasting unit shown in Figure 3.1 to a hydroblasting unit. An air-operated pump provides high-pressure water to the adaptor, where flow is adjusted with a needle valve. The adaptor cavity distributes the water through small jets to mix with the passing abrasive. The abrasive, high-pressure air and the water are then propelled from the nozzle. Source: Courtesy of Clemco Industries, Wasington, MO.

zontal barrel, supported on trunions and rotated at low speed, tumbles the parts as they are air-blasted by silicon carbide or aluminum oxide abrasive. Dust released from the attrition of the abrasive or the workpiece residue is collected by a local exhaust ventilation system with sweep air designed to provide a velocity of 500 fpm though all openings.

3.4.1.3 Rotary Blasting Table. A common abrasive blasting device for moderately sized parts with heavy soils is the rotary blasting table shown in Figure 3.6. The parts are placed on a large swing table attached to the main access door. After loading, the door is closed and the parts table retracts into the tight enclosure. The abrasive is projected to the surface of the workpiece positioned on the rotating table using the centrifugal impeller described in Figure 3.3. Metal shot or grit is normally used for heavy cleaning in these enclosures; this equipment is widely used in ferrous and nonferrous foundries to remove silica sand fused on the castings. Control of this dust is accomplished by local exhaust ventilation on the main

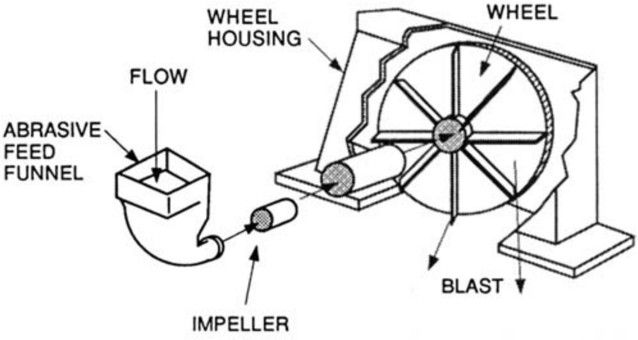

Figure 3.3 Centrifugal impeller for fixed abrasive blasting systems.

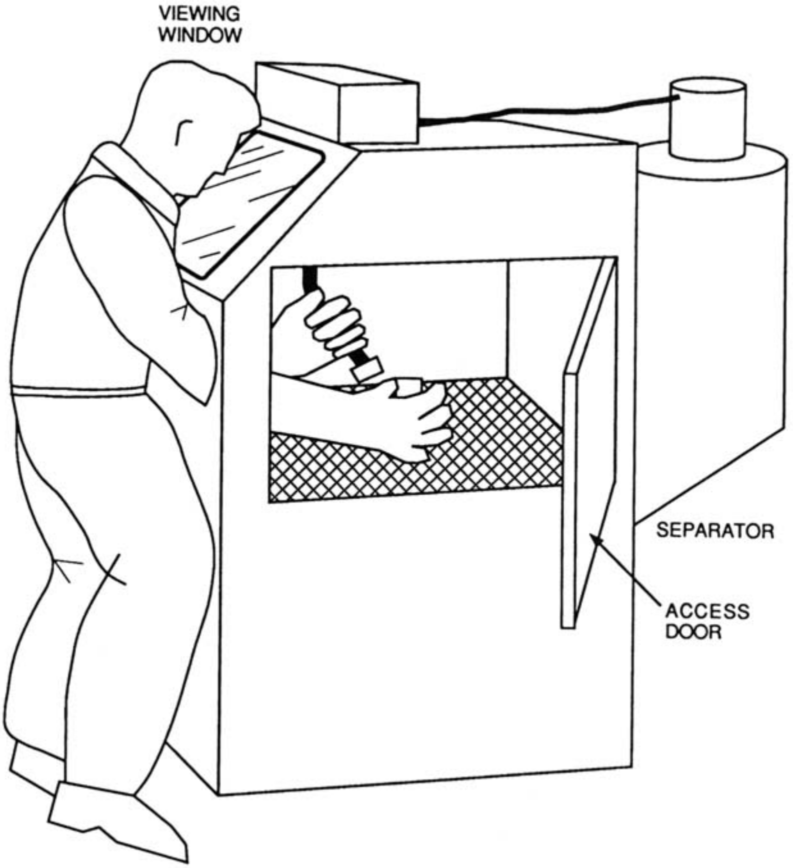

Figure 3.4 Abrasive blasting cabinet.

enclosure and the associated abrasive transport equipment including the skip hoist. The ventilation is designed to provide a velocity of 500 fpm through all openings.

3.4.1.4 Abrasive Blasting Room. Large workpieces such as welded assemblies, forgings, and castings are cleaned in large rooms (Figure 3.7) where the workpiece is transported to the blasting position by a fork-lift truck or a flat bed rail car. After the part is positioned the access doors are closed and the blasting is done manually by an operator wearing special protective clothing.

The abrasive blasting room is serviced by a local exhaust ventilation system with flow from ports in the ceiling downward past the work position either to the floor grate or to exhaust slots along the long wall. The design is based on a cross-sectional velocity of 100 fpm. As with other systems, the air passes through a settling chamber and to a fabric filter before being exhausted to outdoors.

The primary hazard in abrasive blasting rooms is the high dust concentration (10–100 mg/m^3) from the abrasive and the surface debris on the workpiece. The downdraft ventilation permits visibility, but it cannot control the dust to a hy-

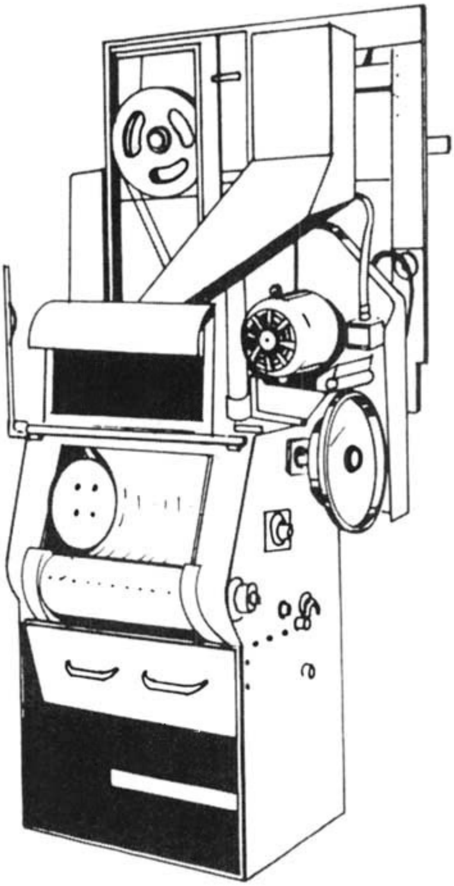

Figure 3.5 Tumble blasting unit.

genic level. The abrasive blasting helmet is the principal form of protection. However, as discussed later in this section, this device may not be adequate to prevent lung disease.

The hand-held nozzzle, which projects abrasive at a high velocity, presents a vibration hazard to the worker. Isolation gloves may be of some value. The nozzle is equipped with a dead man switch; if the nozzle is dropped, the air supply shuts off. If this precaution were not taken, the whipping hose could injure the worker. The noise level in the enclosure exceeds 110 dBA and a hearing conservation program is necessary (NIOSH, 1975).

3.4.2 Open Air Blasting

Abrasive blasting of large transport equipment such as ships, trucks, trains, and structures including bridges, towers, and water tanks must be done outdoors (Figure 3.8). Protecting the worker and the environment from both the abrasive dust and the surface coating on the structure during this activity presents a major challenge.

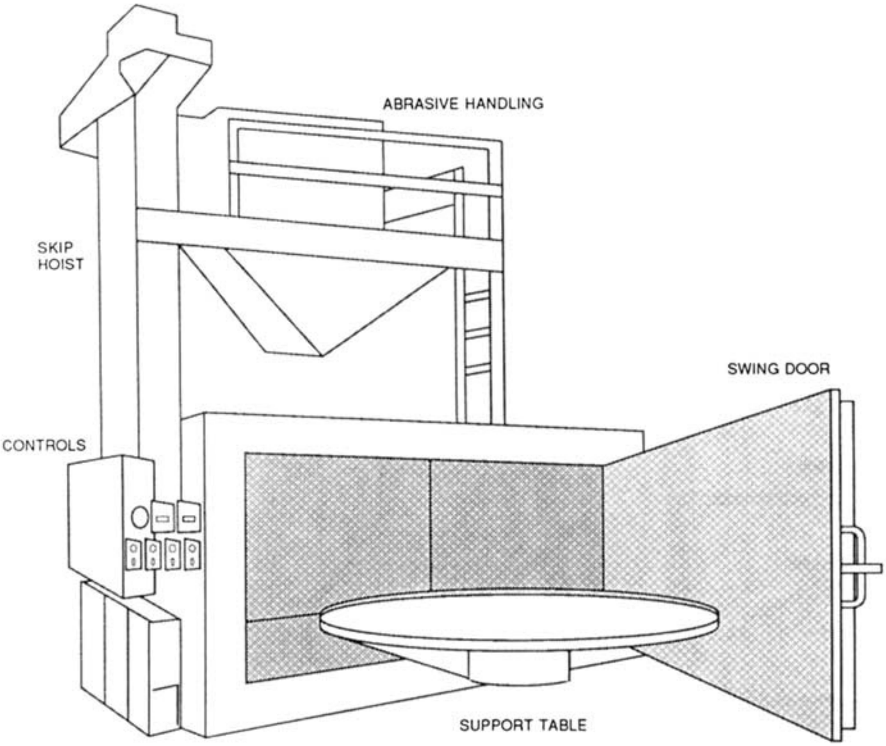

Figure 3.6 Rotary blasting table.

The magnitude of the problems faced during open air abrasive blasting can be illustrated by two common applications. Construction of new ships and repair of older vessels both require extensive preparation of metal surfaces before sophisticated painting systems are applied. Rigorous cleaning of shipboard water and fuel storage tanks is also necessary. Generally, containment of dust from this on-board blasting work is possible. However, work on hulls previously painted with marine coatings containing toxic biocides, in the semiconfined space of a dry dock, with other trades working nearby, requires an elaborate temporary enclosure, an excellent respiratory protection program, and well conceived work plans.

The preparation of bridge structures for repainting is another major challenge. In most cases previously applied lead-based paint must be removed and the surface blasted to what is known as white metal. It is estimated that abrasive cleaning of a medium-sized highway bridge will provide 800 tons of lead-contaminated abrasive and landfill disposal will cost $400,000 (NY Times, 1992). To prevent general environmental contamination, this work is done in temporary enclosures with or without ventilation. This approach minimizes dust release to the community, but exposes blasters to high concentrations of abrasive lead and dust. Again one must rely on the use of respiratory protective devices to safeguard the worker. The structural steel painting industry has given the protection of the environment and the general population considerable study (SSPC, 1992).

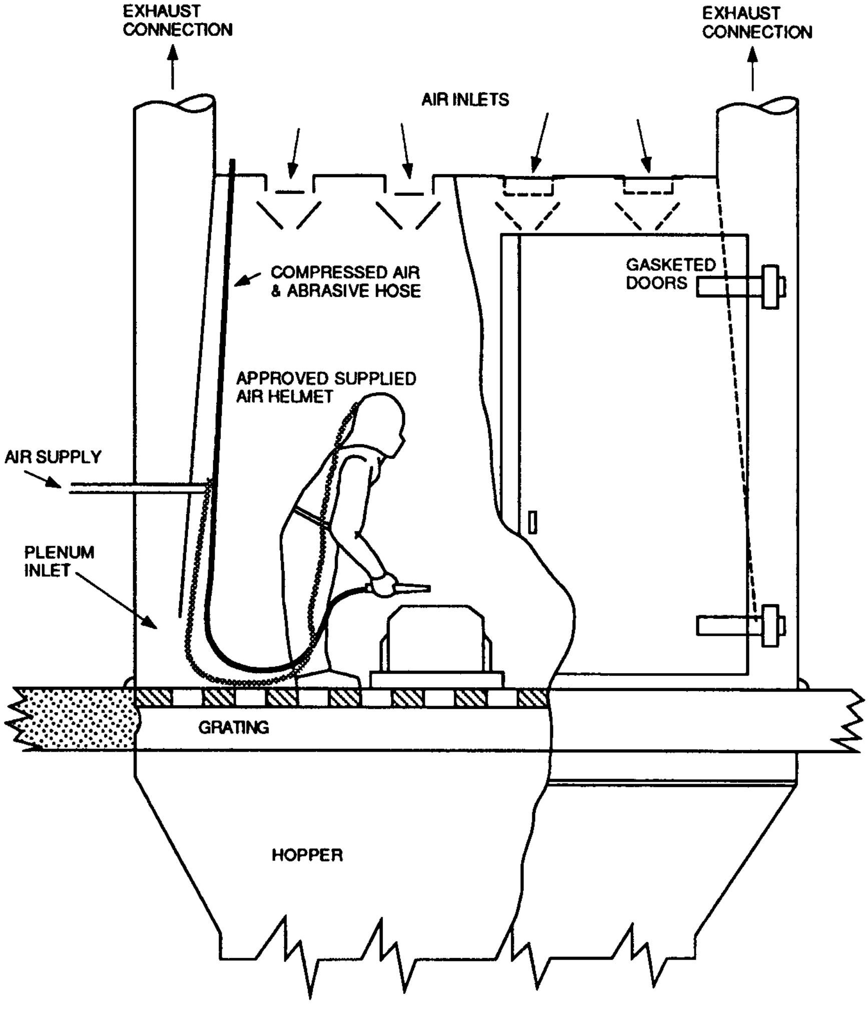

Figure 3.7 Abrasive blasting room.

3.5 HEALTH HAZARDS

Historically, the principal hazard associated with abrasive blasting in the United States is attributable to the widespread use of silica sand as the abrasive. The popularity of this abrasive is due to its availability, effectiveness, and low cost. Unfortunately, many abrasive blasting sands have very high concentrations of free silica, which causes silicosis. In the United States the disease pattern in this industry was clearly identified by US Public Health Service studies conducted in the 1930s.

In the 1970s, studies of the health status of blasters in the United States showed that workers blasting in confined spaces without adequate respiratory protective devices had a working lifetime of 10 years. In one study population of 100 workers, 28 men died from silicosis at an average age of 45 years (Samini et al., 1974).

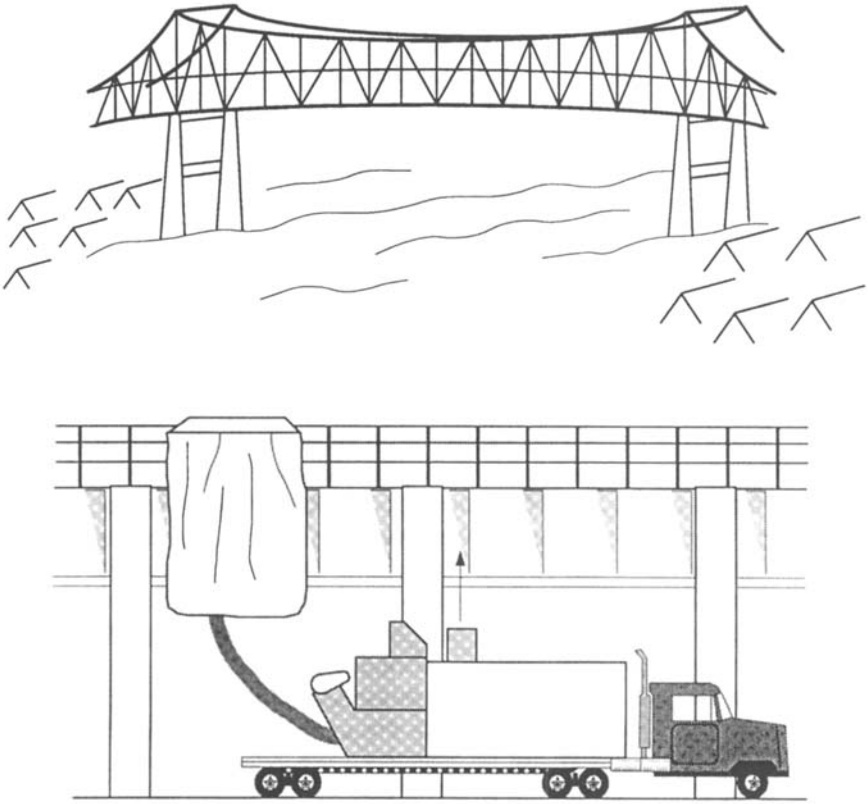

Figure 3.8 Abrasive blasting of bridges painted with lead-based paint may require enclosure of the blasting area and exhaust of the dust-laden air to a mobile air cleaner. The blasting personnel must wear appropriate protective equipment.

Another startling result was that eight of the workers who died from silicosis had worked in abrasive blasting less than three years. In an alert published in 1992 the National Institute for Occupational Safety and Health identified a registry of 99 cases of silicosis in abrasive blasting with 14 either dead or severely impaired (NIOSH, 1992). In 1993 the frustration of public health professionals with this issue was voiced by the Director of NIOSH, who proclaimed the prevalence of silicosis in abrasive blasting to be a national disgrace.

In the United Kingdom silicosis in sandblasters was acknowledged in 1949 and the use of sand was prohibited for in-plant abrasive blasting. A ban on the use of sand for both in-plant and outside applications has been adopted by the European Community. In contrast, in the United States OSHA requested comments in the late 1970s on the banning of sand for abrasive blasting. As a result of the information obtained it was decided not to ban the use of sand but to require close control of abrasive blasting operations. A draft standard was written, but hearings were not held and the proposed standard was withdrawn.

In addition to the health hazard associated with the abrasive, one must consider the debris removed from the workpiece. If the workpiece is an alloy containing chromium, nickel, or a highly toxic material such as berryllium, the airborne debris may present a hazard. If the workpiece is mild steel and only rust and scale are being removed, the hazard from the surface debris is minimal. However, the removal of toxic coatings such as lead paint on bridge structures and organic mercury from ship hulls must be closely controlled.

3.6 CONTROLS

The most effective control of the hazards from sandblasting continues to be substitution of low-toxicity abrasives. One of the widely used substitutes for sand is a series of metal and coal slags (Table 3.3). Animal studies have demonstrated fibrotic changes in rats exposed to coal slags; such effects were not seen in comparable studies of copper slags (Mackay et al., 1980). Concerns have also been expressed regarding the presence of heavy metals and trace carcinogens in certain slags (Stettler et al., 1982). A major concern is directed to the variability of the chemical composition of the slags that occurs with changes in source material. Although this knowledge is disquieting, there is still a strong opinion that slag-based abrasives are an appropriate substitute for silica sands.

Other substitutes for sand include selected silicate minerals that contain low percentages of silica. One manufacturer provides a mineral sand consisting primarily of ferrous aluminum silicate that has been conditioned to reduce the concentration of free silica to less than 1% (DuPont, 1990). This abrasive, which has seen application in the steel industry for removal of mill scale and rust, offers low dustiness and requires a low abrasive to air ratio. (See Appendix E for information on silica and silicates.)

Solid carbon dioxide is an appropriate low hazard abrasive for selected applications. In this case the contaminant on the workpiece is dislodged by a combination of forces, including direct impact of the solid carbon dioxide particle on the surface debris, thermal shock from the dry ice, and the upsetting force as the dry ice flashes from solid to gas. First used for special purpose cleaning in the aero-

TABLE 3.3 Trades Names of Metallurgical Slags

- Copper slags
  - Apache
  - Green Diamond
  - Kleen Blast
  - Blast Off
  - Diamond K
- Boiler slag
  - Black Beauty
- Nickel slag

Source: Reist and Parker (1984).

space industry, it is cost effective for a number of applications in general industry (Anon., 1993). This material is now challenging glass beads for the cleaning of tire molds. It not only removes residual release or parting material and tire black, but also unplugs the vent holes in the mold without destroying the tread pattern. In the automotive industry it is used for the removal of paint buildup on conveyor hooks that pass through electrostatic paint stations and of plastic flashing on plastic molded parts. When compared to conventional abrasives it is only effective for light duty cleaning; a major advantage is that it does not leave a residue. However, it is more expensive, and although carbon dioxide has a low order of toxicity, in confined space work it may present an asphyxiation hazard.

No matter what abrasive is in use, the smaller the abrasive grain, the greater is the potential for high dust concentrations in the respirable size. To minimize this problem many authorities have specified that the abrasive grain size must be such that prior to blasting not more than 1% by weight of the abrasive may pass through a #70 US sieve and after use not more than 1.8% of the particles may be less than 5 μm.

Ventilation plays an important role in dust control from blasting in enclosures and accepted standards are available (ACGIH, 1992; ANSI, 1985). In open blasting, however, ventilation control is difficult to achieve. One approach that has been tried commercially is a high-velocity–low-volume capture system. This technique requires close attention to the seal between the nylon brush and the work surface and as a result it is much slower than conventional techniques.

Attempts to utilize wet blasting to minimize dust generation on open blasting has found favor on certain operations. A common criticism is that its use before painting interferes with proper paint bond. This criticism is countered by the manufacturer of the equipment, who states that a conditioning wash can be used after the blasting which will protect the surface until painting is completed.

An early study found great variablity in the effectiveness of the respiratory protective programs operated by abrasive blasting companies (NIOSH, 1974). The equipment in use ranged from simple paper bag hoods to approved, Type C supplied-air respirators with continuous flow supply and full facepiece masks, hoods, or helmets. The protection factors in the field ranged from 1.9 to 3750. The principal failing was the lack of a written respiratory protective device program as defined in Title 29 CFR1910.134. In many locations selection, fitting, and maintenance of respirators did not exist. In other studies in this industry, air-supplied devices were used with hazardous air supplies and inadequate air flow to the helmet.

As noted previously respiratory protective devices are not required on properly designed and externally operated abrasive blasting enclosures. It is also obvious that Type C air-supplied abrasive blasting helmets are necessary to protect personnel doing open blasting and working in abrasive blasting rooms. NIOSH has assigned a protection factor of 25 for a Type C hooded respirator operating in a continuous flow mode and 2,000 operating in the positive-pressure mode; the latter respirator is recommended for open abrasive blasting with crystalline silica (NIOSH, 1992). Less obvious is the selection of proper respiratory protective devices for personnel who assist in open blasting or for the other trades working in the area. In most cases it is prudent to require the proper wearing of a half- or full-face respirator equipped with a high-efficiency filter.

There are a number of obvious physical hazards in abrasive blasting. The high-velocity flow of dry abrasive through a hand-held nozzle may result in the generation of a static electricity charge. This does not represent a true electrical shock hazard to the blaster, but it may be quite disruptive if the worker is on a precarious work platform. It can be eliminated by proper grounding of the nozzle and hose. In addition, the high-velocity discharge from the nozzle may cause serious injury and death if the nozzle is inadvertently directed at an individual.

The release of air at high velocity by the blasting nozzle generates a wide-band noise that will easily exceed 110 dBA. This noise is greatly attenuated in a properly designed, externally operated enclosure, but this alternative is not available for open blasting. Engineering control by nozzle redesign has not been possible to date and a muffler is not feasible. The only satisfactory control is the implementation of a Hearing Conservation Program including the use of hearing protectors. Frequently this will require the use of both insert plugs and muffs (NIOSH,1975).

REFERENCES

Anon, *The Economist*, May 22, 1993, 90–91.

ACGIH (1992), *Industrial Ventilation, A Manual of Recommended Practice*, 21st ed., Committee on Industrial Ventilation, American Conference of Governmental Industrial Hygienists, Cincinnati, OH.

ANSI (1985), *Ventilation and Safe Practices of Abrasive Blasting Operations*, ANSI Z9.4–1985, American National Standards Institute, New York.

DuPont Chemicals (1990), Material Safety Data Sheet, Stauralite Products, July 1990, Wilmington, DE.

Mackay, G.R., Stettler, L.E., Kommineni, C., and Donaldson, H.M. (1980), *Am. Ind. Hyg. Assoc. J.*, **41**, 836–842.

New York Times, Dec. 12, 1992.

NIOSH (1974), *Abrasive Blasting Respiratory Protective Practices*, DHHS (NIOSH) Publ. No. 74–104, National Institute for Occupational Safety and Health, Cincinnati, OH.

NIOSH (1975). *Industrial Health and Safety Criteria for Abrasive Blasting Cleaning Operations*, DHHS (NIOSH) Publ. No. 75–122, National Institute for Occupational Safety and Health, Cincinnati, OH.

NIOSH (1992). *NIOSH Alert, Request for Assistance in Preventing Silicosis and Deaths from Sandblasting*, DHHS (NIOSH) Publ. No. 92-102, National Institute for Occupational Safety and Health, Cincinnati, OH.

Reist, P.C. and Parker, J. (1984), *Intl. Soc. Resp. Prot. J.*, **94**, 52–62.

Samini, B., Weill, H., and Ziskind, M. (1974), *Arch. Environ. Health* **29**, 61–66.

SSPC (1992), Annual Conference on Lead Removal From Industrial Structures, SSPC 412-268-2980, Structural Steel Painting Council.

Stettler, L.E., Donaldson, H.M., and Grant, G.C. (1982), *Am. Ind. Assoc. J.*, **43**, 235–238.

CHAPTER 4

Acid and Alkali Cleaning of Metals

4.1 INTRODUCTION

After the removal of major soils, oils, and grease by degreasing, metal parts are often treated with acid and alkaline baths to prepare the surface for electroplating or other finishes. The principal hazards in this series of operations include exposure to acid and alkaline mist released as a result of heating, air agitation, gassing from electrolytic operation, or cross contamination between tanks.

4.2 ACID PICKLING AND BRIGHT DIP

4.2.1 Applications

Pickling is a term describing the treatment of metals with acids and is apparently derived from the early practice of cleaning metal parts by dipping them in vinegar. Its principal application is the removal of tightly bonded scale, rust, corrosion products, and light oxide coatings prior to surface finishing (Spring, 1974).

Scale and rust are commonly removed from low- and medium-alloy steels using a non electrolytic immersion bath of 5–15% sulfuric acid at a temperature of 60–82°C (140–180°F) or a 10–25% hydrochloric acid bath at room temperature. Since sulfuric and hydrochloric acids frequently cause pitting, phosphoric acid may be used as an alternative to remove hard scale and water scale. When steel parts are pickled, a residue or smut is frequently left on the surface. This smut can be removed by an anodic electropickle, alkaline electrocleaning, or ultrasonic cleaning with an alkaline cleaning solution.

To remove the oxide film from stainless steel workpieces after heat treating, a two-stage pickling process is frequently used. For stainless alloys containing greater than 17% chromium, the parts are first immersed in a 10% sulfuric acid bath operating at 66–82°C (150–180°F) to soften the scale, and then in a bath of 25% hydrochloric, 10% nitric, and 1 1/2% hydrofluoric acids operating at room temperature to remove the scale. For stainless steel alloys containing less than 17% chromium, one may use a bath of 20% nitric and 3% hydrofluoric acid at 21–54°C (70–130°F) or a bath of 10% ferric sulfate and 2% hydrofluoric acid at 49–60°C (120–140°F). The efficiency of these pickling operations can be improved by operating at higher temperatures, ultrasonically, or electrolytically. If the scale is not removed with this acid pickle, one must use an alkali scaling bath. After pickling of stainless steels, an operation called passivation is conducted in nitric acid to provide corrosion resistance.

Pickling operations on nonferrous metals such as aluminum, magnesium, zinc, and lead can take several forms. Unlike steel, aluminum parts do not require acid pickle and light-scale stains can be removed by a bath of 25% nitric and 2% hydrofluoric acid, concentrated nitric-hydrofluoric acid, phosphoric acid, or various bright dips. Deoxidizing of magnesium is accomplished with baths of chromic or 30% hydrofluoric acid at room temperature. Hot sulfuric acid or sulfuric-nitric baths are used on zinc. Titanium is treated with 50% nitric and 5% hydrofluoric acid.

As mentioned previously, excessive loss of metal from the workpiece may occur in pickling operations. Several inhibitors have been utilized to reduce this attack on the part, including coal tar still residues, guinadine, substituted pyridines, dibutyl and, ditoyl thiourea, hexamethylene-tetramine, and salts of arsenic and molybdenum (Spring, 1974).

Acid bright dips are usually mixtures of nitric and sulfuric acids employed to remove light oxide deposits and provide a mirror-like surface on cadmium, magnesium, copper, copper alloys, silver, and, in some cases, stainless steel. Nitrogen oxide gases are commonly emitted from these electrolytic baths.

Various acid mists and gases are released from pickling operations (Table 4.1) and acid dips (Table 4.2) depending on bath temperature, surface area of work, current density (if bath is operated electrolytically), and whether the bath contains inhibitors that produce a foam blanket on the bath or lower the surface tension of the bath and thereby reduce misting (ACGIH, 1992).

4.2.2 Health Hazards and Controls

Extensive information is available on the effects of exposure to the various inorganic acids used in pickling and bright dip operations. Major attention is usually given to the corrosive effects of accidental contact of the skin, mucosa, and eyes with resulting burns, ulcers, and necrosis. This attention is warranted given the death in 1992 of a Massachusetts worker on an open-surface tank line who was exposed to a hydrofluoric acid spill. In the form of airborne mist, gases, and vapors, the various acids are serious upper and lower airway irritants depending on their solubility. In the case of selected acids like nitric, the associated forms of the

TABLE 4.1 Contaminants Released by Pickling Operations

Type	Components of Bath which May be Released to Atmosphere	Physical and Chemical Nature of Major Atmospheric Contaminant	Contaminant Generation[a]
Aluminum	Nitric acid	Nitrogen oxide gases	2
	Chromic, sulfuric acids	Acid mists	3
	Sodium hydroxide	Alkaline mist	1
Cast iron	Hydrofluoric–nitric acids	Hydrogen fluoride–nitrogen oxide gases	2,1
Copper	Sulfuric acid	Acid mist, steam	3,2
	None	None	4
Duralumin	Sodium flouride, sulfuric acid	Hydrogen fluoride gas, acid mist	3
Inconel	Nitric, hydrofluoric acids	Nitrogen oxide, HF gases, steam	1
	Sulfuric acid	Sulfuric acid mist, steam	2
Iron and steel	Hydrochloric acid	Hydrogen chloride gas	2
	Sulfuric acid	Sulfuric acid mist, steam	1
Magnesium	Chromic–sulfuric, nitric acids	Nitrogen oxide gases, acid mist, steam	2
Monel and nickel	Hydrochloric acid	Hydrogen chloride gas, steam	2
	Sulfuric acid	Sulfuric acid mist, steam	1
Nickel silver	Sulfuric acid	Acid mist, steam	3,2
Silver	Sodium cyanide	Cyanide mist, steam	3
Stainless steel	Nitric, hydrofluoric acids	Nitrogen oxide, hydrogen fluoride gases	2
	Hydrochloric acid	Hydrogen chloride gas	2
	Sulfuric acid	Sulfuric acid mist, steam	1
Stainless steel immunization	Nitric acid	Nitrogen oxide gases	2
Stainless steel passivation	Nitric acid	Nitrogen oxide gases	2

Source: Adapted from ACGIH, 1992.

[a] Contaminant generation rate: 1—high; 2—medium; 3—low; 4—nil.

TABLE 4.2 Contaminants Released by Acid Dip Operations

Type	Components of Bath which May be Released to Atmosphere	Physical and Chemical Nature of Major Atmospheric Contaminant	Contaminant Generation Rate[a]
Aluminum bright dip	Phosphoric, nitric acid	Nitrogen oxide gases	1
	Nitric, sulfuric acids	Nitrogen oxide gases, acid mist	2,1
Cadmium bright, dip	None	None	4
Copper bright dip	Nitric, sulfuric acids	Nitrogen oxide gases, acid mist	2,1
Copper semibright dip	Sulfuric acid	Acid mist	2
Copper alloys bright dip	Nitric, sulfuric acids	Nitrogen oxide gases, acid mist	2,1
Copper matte, dip	Nitric, sulfuric acids	Nitrogen oxide gases, acid mist	2,1
Magnesium dip	Chromic acid	Acid mist, steam	2
	Nitric, sulfuric acids	Nitrogen oxide gases, acid mist	2,1
Monel dip	Nitric, sulfuric acids	Nitrogen oxide gases, acid mist	2,1
Nickel and nickel alloys dip	Nitric, sulfuric acids	Nitrogen oxide gases, acid mist	2,1
Silver dip	Nitric acid	Nitrogen oxide gases	1
	Sulfuric acid	Sulfuric acid mist	2
Zinc and zinc alloys dip	Chromic, hydrochloric acids	Hydrogen chloride gas (if HCl attacks Zn)	4,3

Source: Adapted from ACGIH, 1992.

[a] Contaminant generation rate: 1—high; 2—medium; 3—low; 4—nil.

acids may cause pulmonary edema and death. Although limited studies of chronic effects have been conducted, in the 1980s a series of epidemiological studies found excess laryngeal cancer in steel workers who conducted pickling operations with sulfuric and other acids.

The air concentrations of acid mist from pickling operations would be expected to vary greatly from facility to facility; however, in one study of pickling operations in the United Kingdom, the airborne mist concentrations of sulfuric acid at two steel mills both averaged 2 mg/m^3 (Steenland and Schnorr, 1988). In a study by NIOSH (1985) of hydrochloric acid pickling at room temperature, the personal air-sampling concentrations ranged from 0.1 to 1.0 mg/m^3 with significant variability between operations. Lateral slot ventilation from one side of the tank provided exhausts of 55–80 cfm/ft.^{2} of tank surface. In the same survey, sampling was conducted on the operator of an acid dip tank containing 13% hydrofluoric acid, 43% nitric acid, and 22% sulfuric acid operating at room temperature. The operator had a hydrofluoric acid exposure of 2.7 mg/m^3, from 0.72 to 0.81 mg/m^3 of nitric acid, and the sulfuric acid concentrations were 0.12 and 2.8 mg/m^3. A second acid dip tank containing 50% nitric acid resulted in worker exposure ranging from 0.05 to 2.8 mg/m^3 for six air samples. This variability in acid mist operations demonstrated by personal air sampling is due to differences in tank geometry, ventilation control, work rate, and work practices.

The ventilation requirements for acid dip tanks (Figure 4.1) can be calculated for individual processes using the method described in Chapter 13. Owing to carryover of pickling acids in the rinse, the rinse tanks may also require local exhaust ventilation. Bright-dip baths require more efficient hooding and exhaust than do most other acid treatment operations.

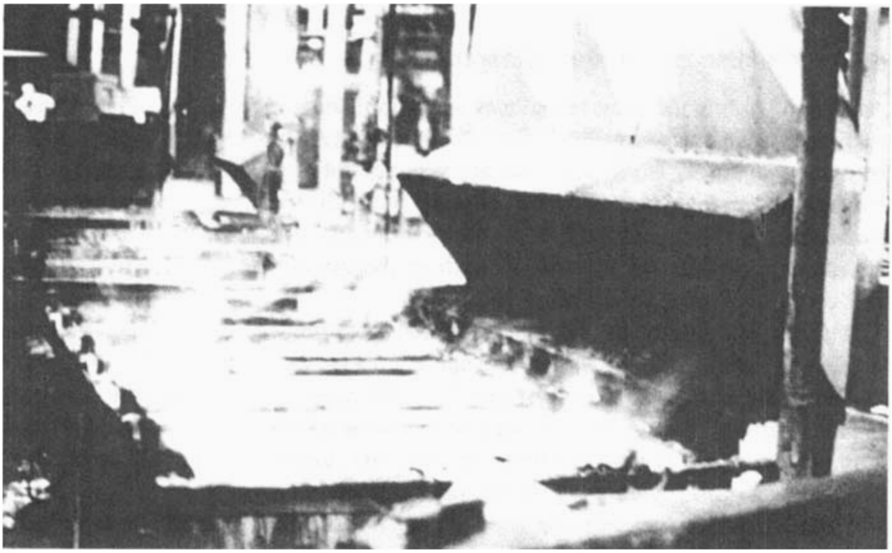

Figure 4.1 Ventilation control on an acid dip tank.

The cleaning and descaling of steel by acid pickling represents a major expense to industry because of acid consumption, disposal of spent acids, and the health and safety controls that must be installed. Industry has recognized that it must initiate programs to eliminate the need for descaling and, when it is necessary, to employ other descaling methods. Major buildup of scale occurs in heat treatment. To minimize this problem, the atmosphere of heat-treating furnaces is being changed to lessen the amount of scaling that occurs. When descaling is necessary, mechanical methods including abrasive blasting are now being considered. Cleaning with caustic-based chelating solutions is also under consideration (AISI, 1982).

The minimum safe practices for employees who conduct pickling and bright-dip operations have been proposed by Spring (1974):

1. Wash hands and faces before eating, smoking, or leaving plant. Eating and smoking should not be permitted at the work location.
2. Only authorized employees should be permitted to make additions of chemicals to baths.
3. Face shields, chemical handlers' goggles, rubber gloves, rubber aprons, and rubber platers' boots should be worn when adding chemicals to baths and when cleaning or repairing tanks.
4. Chemicals contacting the body should be washed off immediately and medical assistance obtained.
5. Supervisors should be notified of any change in procedures or unusual occurrences.

4.3 ALKALINE TREATMENT

4.3.1 Alkaline Immersion Cleaning

Acid and alkaline cleaning techniques are complementary in terms of the cleaning tasks that can be accomplished. The alkaline immersion systems are used in soak, spray, and electrolytic cleaning and are superior for removal of oil, gases, buffing compounds, certain soils, and paint. A range of alkaline cleansers, including sodium hydroxide, potassium hydroxide, sodium carbonate, sodium meta or orthosilicate, trisodium phosphate, borax, and tetrasodium pyrophosphate are used for both soak and electrolytic alkaline cleaning solutions.

The composition of the alkaline bath may be complex, as shown in Table 4.3, with a number of additives to handle specific tasks. In nonelectrolytic cleaning of rust from steels, the bath may contain 50–80% caustic soda in addition to chelating and sequestering agents. The parts are immersed for 10–15 min and rinsed with a spray; this cycle is repeated until the parts are derusted. Although excellent for cleaning rust, this technique will not remove scale.

Electrolytic alkaline cleaning is an aggressive cleaning method and usually follows some primary cleaning. The bath is an electrolytic cell powered with direct current, in which with the workpiece conventionally is the cathode and the tank is

TABLE 4.3 Composition of an Alkaline Soak Cleaner for Steel

Component	Purpose
Caustic soda	Neutralize acidic soil
Sodium silicate	Disperse solids, assist detergency
Trisodium phosphate	Peptize the soil
Tetrasodium pyrophosphate	Detergency action, mineral oils, soils
Sodium tripyrophosphate	Reduce hardness
Surfactants	Reduce surface tension
Soda ash	Alkaline reserve and electrolyte

Souce: Spring, 1974.

the anode (Figure 4.2). The water dissociates and oxygen is released at the anode and hydrogen at the cathode. An initial soak is used to loosen the soil. When the system is powered, the hydrogen gas released at the workpiece by the dissociation of water causes agitation of the surface soils with excellent soil removal.

Conventional steel cleaning is conducted at 550–1700 A/m^2 for a period of 1/2–3 min. Zinc is cleaned at a lower current density of 100–330 A/m^2 for 1/3–1 min. Periodic reversing of the current may be used to enhance cleaning.

As in the case of electroplating baths, the gases generated at the workpiece and the tank may result in the release of caustic mist and steam at the surface of the bath. Mist generation is greatest under cathodic cleaning (workpiece is the cathode) and varies with bath concentration, temperature, and current density.

Surfactants and additives that provide a foam blanket on the bath are important to the proper operation of the bath. Ideally, the foam blanket should be 5–8 cm

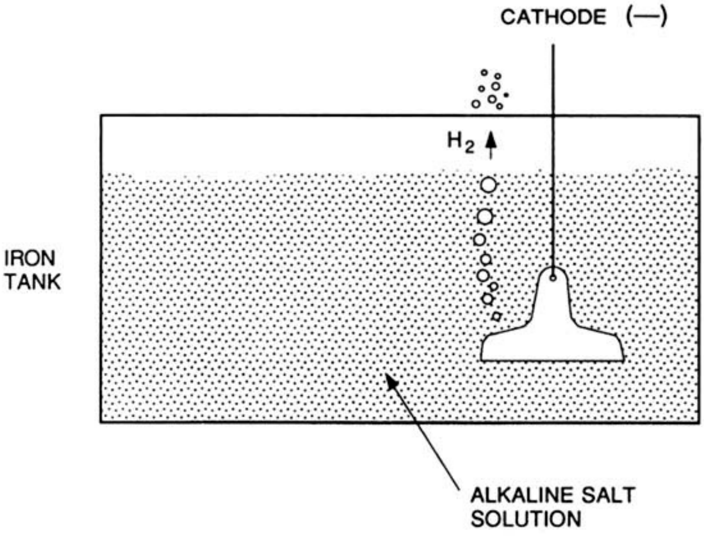

Figure 4.2 Electrolytic tank for cathodic cleaning.

thick to trap the released gas bubbles (NIOSH, 1985). The additives must be adjusted to the type of cleaning since soil properties may either enhance or suppress foam generation. If the foam blanket is too thin, the gas may escape, causing a significant alkaline mist to become airborne; if too thick, the blanket may trap hydrogen and oxygen, with resulting explosions ignited by sparking electrodes.

Aluminum is routinely electrolytically cleaned and etched with a strong alkaline solution in a cathodic cleaning configuration. Owing to the surface activity of the solution, significant quantities of the aluminum surface are removed. Surface removal can be controlled so as to lightly etch the parts, remove surface imperfections, and provide a matte finish. Alkaline baths can be used also to chemically mill aluminum parts to size by removing large quantities of metal.

Bath additives used in alkaline dip baths for aluminum include triethanolamine and salts of strontium, barium, and calcium to reduce the etch rate and stannous or cobalt salts to increase the etch rate. The surface appearance of the etched part can be modified by the addition of sodium nitrate to the bath.

4.3.2 Salt Baths

A bath of molten caustic at 370–540°C (700–1000°F) is frequently used for initial cleaning and descaling of cast iron, steel alloys, copper, aluminum, and nickel with subsequent quenching and acid pickling. The advantages claimed for this type of cleaning are that it does not require precleaning and it provides a good bond for subsequent finishes. Metal oxides of chromium, nickel, and iron are removed without attacking the base metal; oils are burned off, and graphite, carbon, and sand are removed. The oxides and surface debris collect as sludge on the bottom of the bath. The other contaminants combine with the molten caustic, float on the surface of the bath, or are volatized as vapor or fume.

Molten sodium hydroxide is used at 430–540°C (800–1000°F) for general purpose descaling and removal of sand on castings. A modification of this bath, the Virgo process, uses a few percent of sodium nitrate or a chlorate salt to enhance the performance of the bath. Electrolytic processes with sodium hydroxide utilize a two-tank system. The first tank is operated electrolytically with the workpiece as the anode. The part is then moved to a second tank where the workpiece is the cathode.

A reducing process utilizes sodium hydride in the bath at 370°C (700°F) to reduce oxides to their metallic state. The bath contains fused liquid anhydrous sodium hydroxide with up to 2% sodium hydride, which is generated in accessory equipment by reacting metallic sodium with hydrogen.

All molten baths require subsequent quenching, pickling, and rinsing. The quenching operation dislodges the scale through steam generation and thermal shock.

These baths require well-defined operating procedures because of the hazard from molten caustic. Local exhaust is necessary with a complete enclosure to protect the operator from violent splashing as the part is immersed in the bath. Associated quenching and pickling tanks must also be provided with local exhaust ventilation. Ventilation standards have been proposed for these operations (ACGIH, 1992).

REFERENCES

ACGIH, (1992), *Industrial Ventilation, A Manual of Recommended Practice*, 21st ed., Committee on Industrial Ventilation, American Conference of Governmental Industrial Hygienists, Cincinnati, OH.

AISI (1982), *Cleaning and Descaling Stainless Steels*, Committee of Stainless Steel Producers, American Iron and Steel Institute, Washington, DC.

NIOSH (1985), *Control Technology Assessment: Metal Plating and Cleaning Operations*, DHHS (NIOSH) Publ. No. 85-102, National Institute for Occupational Safety and Health, Cincinnati OH.

Spring, S. (1974), *Industrial Cleaning*, Prism Press, Melbourne, Australia.

Steenland, K. T,. Schnorr, L., (1988), *Brit. J. Ind. Med.*, **45**, 766–776.

CHAPTER 5

Metal Degreasing

5.1 INTRODUCTION

Degreasing is a term applied to the removal of grease, oil, wax, and other surface contaminants, usually from metal workpieces (Table 5.1). This process is probably the most common operation in the manufacturing and service workplace. The nature of the cleaning requirement and the workload dictate the choice of solvent and the process equipment. In small automotive repair garages and building maintenance shops where machinery must be dissassembled, oil and grease is commonly removed by cold degreasing with liquid solvent by dipping, brushing, or wiping. In larger maintenance shops or garages, the solvent is held in a large dip tank equipped with a mechanical agitator and spray nozzle. If the parts are large or if the body or chassis of large equipment must be cleaned, a container of the solvent is brought to the equipment location and the surface is wiped or brushed clean.

A more rigorous cleaning requirement exists in thousands of machine shops, electroplating facilities, paint shops, and assembly plants for in-process cleaning of metal, glass, and plastic piece parts. These shops require more efficient cleaning than can be achieved by wet degreasing techniques and residue is not tolerated on the workpiece surface. For the past 50 years this need has been met by vapor- phase degreasers using a range of halogenated hydrocarbons solvents (Table 5.2). By 1991 there were probably 300,000 vapor phase degreasers installed in the United States; over 400 million pounds of halogenated hydrocarbons were used that year (Table 5.3).

TABLE 5.1 Surface Contaminants on Workpiece

Pigmented drawing compounds	Oil-based materials to which heavy-duty lubricants such as graphite, sulfur, lime, or lithopone are added
Unpigmented drawing compounds	Straight mineral oils, grease, vegetable and animal oils and fats.
Polishing and buffing compounds	Abrasives and metallic soaps in a wax or grease carrier.
Cutting and grinding fluids	Mineral oils, emulsified oils, and synthetic fluids for metal machining.
Scale	Corrosion products including rust, metal salts, and various metallic oxides.
Miscellaneous contaminants	Metal particles, chips, carbon, and salt deposits.

Source: EPA (1992).

In the 1970s the advent of new industrial technology in the military, aerospace, and computer industries required cleaning efficiencies not possible with conventional vapor-phase degreasing. These new requirements were met by precision cleaning methods based on improved equipment and new solvents. By 1993 significant changes in degreasing technology, driven by environmental concerns, were under way. These changes are resulting in major shifts in the design of degreasing agents and cleaning equipment and, therefore, in worker exposure.

5.2 DEGREASING AGENTS

Before discussing current and emerging processes and materials, the evolution of degreasing technology during the past four decades should be understood. In the

TABLE 5.2 Synonyms for Common Halogenated Degreasing Solvents

Methylene chloride	Dichloromethane Methylene bichloride Methylene dichloride
Perchloroethylene	Carbon dichloride Perc Perclene Perchlor Tetrachloroethylene
Trichloroethylene	Tri Triclene Trielene TCE
1,1,1-Trichloroethane	Methyl chloroform TCA
Trichlorotrifluoroethane	Chlorofluorocarbon 113 CFC 113 Freon 113

TABLE 5.3 Use of Degreasing Solvents in 1991[a]

Solvent	Use (millions of pounds) Vapor Degreasers	Use (millions of pounds) Cold Degreasers
Methylene chloride	10.1	20.3
Perchloroethylene	46.0	—
Trichloroethylene	89.0	5.7
1,1,1-Trichloroethane	162.2	95.4
Trichlorotrifluoroethane	8.0	2

Source: EPA (1992).

[a] Exclusive of the electronics industry.

1940s the normal method of degreasing metals was cold degreasing in immersion tanks using a range of petroleum hydrocarbons. These materials did a reasonable job of removing oils and grease; however, they had limited solvency, were slow drying, and left a residual film on the workpiece. Since these solvents were flammable (flash point below 100°F), they required rigorous in-plant fire protection controls. In addition, most of these solvents were photochemically reactive and produced smog. As a result, these volatile organic chemicals (VOCs) were designated as hazardous air pollutants under the Clean Air Act and were subject to both federal and local air pollution district regulations. For these reasons, there was a gradual shift during the 1940s and 1950s away from cold immersion cleaning with petroleum hydrocarbons to vapor phase degreasing using trichloroethylene, perchloroethylene, and methylene chloride. Of these three common vapor-degreasing solvents only trichloroethylene was photochemically reactive. Vapor degreasers became universally acceptable in most sophisticated plant settings and more than 20,000 units were installed in the United States by 1960.

Toxicology studies of the the major degreasing solvents conducted in the 1960s and 1970s identified trichloroethylene, perchloroethylene, and methylene chloride as having significant systemic toxicity, and trichloroethylene and perchloroethylene were considered suspect carcinogens. Two additional solvents, 1,1,1-trichloroethane and chlorofluorocarbon 113, were introduced in the late 1950s and, owing to their superior performance, low toxicity, and nonphotochemical reactivity, they were widely used in the 1970s and 1980s. By 1990 over 180 thousand metric tons of chlorofluorocarbons were produced each year.

In the 1970s scientists became concerned that the stable chlorofluorocarbons would migrate to the upper atmosphere where halogen-catalyzed chemistry would result in the loss of stratospheric ozone. This concern was justified by a series of studies identifying a hole in the ozone layer in the Antarctic polar stratosphere. Depletion of the ozone layer had a number of major consequences, including increased levels of ultraviolet light at the earth's surface with a resulting increase in malignant melanoma in the worlds' population. By the 1980s there was definite evidence that 1,1,1-trichloroethane and a range of chlorofluorocarbons, including chlorofluorocarbon 11 (CFC 11) and chlorofluorocarbon 113 (CFC 113), were major contributors to depletion of the stratospheric ozone layer at both polar atmospheres.

As a consequence of the the public health importance of this issue, there was a worldwide consensus that the manufacture and use of these materials must be curtailed on an emergency basis and that acceptable substitutes be developed. A family of three hydrofluorocarbons, hydrochlorofluorocarbon 141b (HCFC 141b), hydrochlorofluorocarbon 123 (HCFC 123), and hydrochlorofluorocarbon 225 (HCFC 225) were produced to replace CFC 11 and CFC 115. These hydrochlorofluorocarbons have an ozone depletion potential much lower than chlorofluorocarbons. The ozone depletion potential of HCFC 141b is approximately the same as 1,1,1-trichloroethane. Although HCFC 225 is an effective replacement for CFC 113, it does have a higher vapor pressure with resulting greater emission losses, it is more expensive than CFC 113, and toxicity testing is not complete. The long-term implications of these materials is limited since their application will be banned after 2015, as will be discussed later. The occupational and environmental characterization of both the conventional solvents and proposed substitutes is shown in Table 5.4.

The case against CFCs was concluded with the 1987 Montreal Protocol, an international agreement on the production and use of chlorofluorocarbons, 1,1,1-trichloroethane, halons (fire suppression agent), and carbon tetrachloride. Insofar as the degreasing solvents were concerned, the agreement required a production and consumption freeze in all developed countries with a complete phaseout of chlorofluorocarbons by the year 2000 and 1,1,1-trichloroethane by 2005. An additional 10 year delay was permitted for the developing countries. In addition, a phaseout of hydrochlorofluorocarbons was planned. (The Clean Air Act of 1990 also contained a comprehensive regulation for chlorofluorocarbons, hydrofluorocarbons, and hydrochlorofluorocarbons.) The initial Protocol was modified twice, with the present agreement calling for phaseout of chlorofluorocarbons by January 1996, 1,1,1-trichloroethane to 50% of the 1989 production level by January 1, 1996, and total phaseout by January 1, 2002 (DuPont, 1992 and Anon, 1993). Hydrochlorofluorocarbon production will be frozen on January 1, 2015 and subsequent use will be limited to refrigeration equipment. Complete curtailment of hydrochlorofluorocarbon production will be effective on January 1, 2030. Pressure to eliminate the application of these materials was given additional force by an EPA regulation that all products manufactured with a process including the use of chlorofluorocarbons or 1,1,1-trichloroethane-based cleaning agents must be so labelled. In addition, in 1993 an excise tax was levied on chlorofluorocarbons and 1,1,1-trichloroethane.

5.3 COLD DEGREASING

5.3.1 Applications and Hazards

The conventional cold degreasing practiced in maintenance shops and automotive garages in the early 1900s was frequently based on the use of pails of kerosene and gasoline in an uncontrolled fashion. By the 1940s a series of petroleum hydrocarbons including mineral spirits, Stoddard solvent, and naptha were commonly used for degreasing in most industries. In well-designed programs, these

TABLE 5.4 Characteristics of Generic Solvent Categories

Generic Solvent Category	ODP[a]	Photochemical Reactivity	GWP[b]	Flash Point[c]	Tested for Chronic Toxicity
Flammable		Yes		F	
Isopropyl alcohol					Rule issued
Mineral spirits					No
Combustible solvent[d]		Yes		C	
Terpenes					Limited[e]
DBE					No
NMP					Rule issued
Alkyl acetates					No
Chlorinated solvents					
TCE		Yes			Yes
PERC		Yes[f]			Yes
METH		No			Yes
TCA	0.1	No	0.02		Yes
Chlorofluorocarbons (CFCs)		No			
CFC-11	1.0		1.0		Yes
CFC-113	0.8		1.4		Yes
Hydrochlorofluorocarbons (HCFCs)		No			
HCFC-123	0.02		0.02		In testing
HCFC-141b	0.1–0.18		0.09		In testing
HCFC-225	NA		NA		In testing
Hydrofluorocarbons (HFCs) and Fluorocarbons (FCs)					
Pentafluoropropanol		NA	NA	NA	No

Source: Wolf et al. (1991). Reprinted by permission of *Journal of the Air & Waste Management Association.*

[a] ODP: The oxygen depletion potential (ODP) is the potential for ozone depletion of 1k of a chemical relative to the potential of 1 k of CFC-11, which has defined ozone depletion potential of 1.0.

[b] GWP: The global warming potential (GWP) of a chemical is the potential of 1k of the chemical to cause global warming relative to the potential of 1k of CFC-11 to cause global warming. CFC-11 has a GWP of 1.0.

[c] F refers to flammable; C refers to combustible.

[d] DBE is dibasic esters; NMP is *N*-methyl-2-pyrrolidone.

[e] One of the terpenes, *d*-limonene, has been tested.

[f] Although PERC is not photochemically reactive, it is not exempt under the Clean Air Act.

NA means not available.

materials were used in immersion tanks of the type shown in Figure 5.1 with a vertical agitated perforated tray (Whim, 1982). The immersion tanks were provided with the necessary fire protection controls including a fusible link-actuated cover. The principal health hazard in this operation is dermatitis. Skin contact should be avoided and heavy-duty protective gloves are mandatory. Glasses and a face shield should be used to protect the eyes and face from accidental splash-

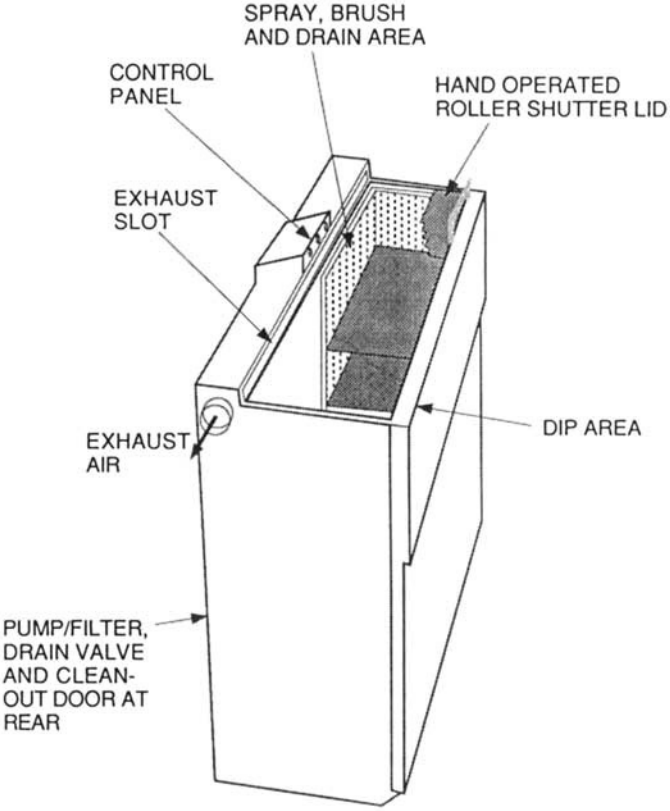

Figure 5.1 Cold degreasing tank. Source: Adapted from Whim (1982).

ing. In some cases a work table with an exhaust is necessary for unloading and inspecting parts.

In some operations, parts are transported to a work station and cleaned with a spray nozzle. Two principle controls are mandatory on such operations. First, an airless nozzle should be used to reduce aerosolization and evaporation of the solvent. Local exhaust ventilation in the form of a conventional paint spray hood must be used in conjunction with the necessary fire protection controls, including automatic extinguishers. Only solvents with a high flash point should be utilized for spray cleaning; effective solvents for a wide range of applications are now available with flash points above 93°C (200°F). In considering the health hazards of this type of cold degreasing, the investigator should review the issues covered under spray painting (Chapter 15).

Although immersion tanks and spray washing are widespread, the most common cold degreasing technique is the use of a small amount of solvent in a container which is taken into the plant for on-site use. In the case of the conventional petroleum hydrocarbons described above, the principal health hazards are dermatitis from skin contact and the inhalation hazard posed when these materials are used in confined spaces. These problems are reflected in an NIOSH Health Hazard Evaluation (NIOSH, 1988) to investigate widespread contact dermatitis in a screw machine plant. A 2–5 gal can of Stoddard solvent was placed at each machine and every 10 min the worker cleaned the parts by dipping them by hand in the solvent. The parts were then dried with a rag and a compressed air nozzle. Stoddard solvent consists of straight and broken chain paraffins, cycloparaffins, and aromatic hydrocarbons. It has a kerosene odor at 5 mg/m^3; the current NIOSH REL is 350 mg/m^3. Three full-shift personal air samples taken on screw machine operators were 36.5, 35.8, and 15.3 mg/m^3. The recommendations proposed by NIOSH for this common machine shop operation were to install a dip rack to eliminate hand contact with the solvent, cover the can when not in use, eliminate the use of the air hose, and use personal protective equipment and improved personal hygiene.

A major shift in the hazard profile of cold degreasing occurred during the 1960 and 1970s when greater solvency power was required and many plants converted to chlorinated hydrocarbon solvents such as trichloroethylene, perchloroethylene, and methylene chloride. Subsequently the advantages of 1,1,1-trichloroethane were recognized and this solvent became very popular for cold degreasing. The hazards in the widespread use of sophisticated solvents for general purpose cold degreasing in the plant environment without adequate controls is illustrated in the following case investigated in the 1970s (Burgess, 1975). A hydraulic oil spill occurred in a pit located in a machine shop (Figure 5.2). An employee poured a few gallons of 1,1,1-trichloroethane in a pail from a nearby 55-gal drum, climbed down the ladder to the base of the pit, and proceeded to clean up the oil by applying the solvent liberally with a floor brush and rags. A short time later he collapsed at the base of the lad-

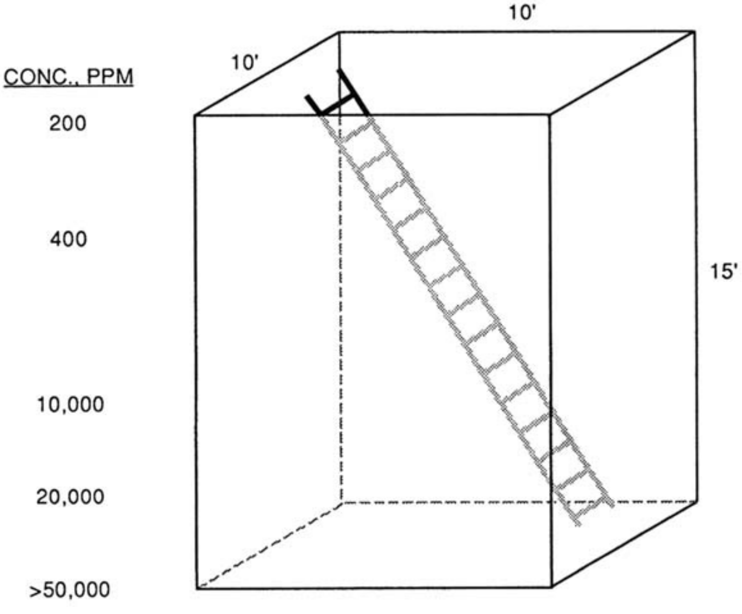

Figure 5.2 Solvent concentrations in machine shop pit during cleaning of oil spill.

der. He was removed from the pit but died from cardiac arrest on the journey to the hospital. Air sampling during a simulation of the accident revealed the solvent vapor concentrations shown in Figure 5.2. The concentration of 1,1,1-trichloroethane at the bottom of the pit was far in excess of the benchmark concentration of 30,000 ppm which can be lethal in 5–6 min. This case demonstrates the care that must be taken when volatile degreasing solvents are used in confined spaces.

5.3.2 Controls

A comprehensive list of precautions for safe operating practices in cold degreasing proposed by Whim (1980) is the basis for the following recommendations:

General Precautions

1. General exhaust ventilation is necessary and if the solvent vapor concentrations exceed acceptable action levels, local exhaust ventilation must be installed.
2. A rigorous confined-space entry protocol must be followed before a worker is allowed to enter cleaning tanks, pits, ducts, or enclosed vessels containing degreasing solvent.
3. If there is a risk of solvent splashing in the eye from spraying or brushing, appropriate eye protection must be worn.
4. Skin contact with the solvent should be avoided. If contact is unavoidable, protective gloves should be worn. The type of glove material will depend on the specific solvent in use.
5. Fire protection requirements should be implemented and smoking forbidden.

Good Housekeeping

1. A list of precautions should be posted at the solvent dispensing location and only authorized personnel who have received instructions on the safe use of the solvent should be issued material.
2. Solvent should not be stored or carried in buckets or open containers; containers of solvent should be clearly labelled.
3. If a major spill occurs, the area must be evacuated and thoroughly ventilated before personnel are permitted to reenter.

Safe working procedures

1. For dipping, the following controls should be implemented in the workplace.
   a. Cleaning tanks should be at least 3 ft high or at bench height so that there is no danger of the worker collapsing into the tank.
   b. Avoid cleaning methods that require the operator to lean over the tank.

c. Locate tanks in well-ventilated areas away from strong drafts.
d. The tank freeboard should be at least equal to the tank width.
e. Cover the tank with a sliding cover when the tank is not in use.
f. Wire baskets should be used to hold small parts to permit complete solvent drainage; the parts should be held at freeboard height until drainage is complete.
g. Clean the parts in the tank, not on a nearby bench.
h. If the surface area of the tank is greater than 1 m^2, consider local exhaust ventilation.

2. Wiping is frequently necessary for cleaning large workpieces that cannot be moved to the cleaning facility. The solvent must be used sparingly and all waste cloths saturated with solvent should be stored in closed-lid safety cans. Wiping must not be done in confined spaces without the necesssary controls.

3. Brushing is the technique of choice when soils are difficult to remove. The parts should be placed on a shelf or tray in the tank and the excess solvent drained back into the tank.

4. Spraying may be necessary if the parts contain blind holes or recesses. Frequently this technique results in high exposures and general contamination of the workplace. The following precautions should be taken in this work:

a. Use an exhausted paint spray booth.
b. Use a pressure-actuated gun, not a conventional air-atomized gun.
c. Use a jet that provides a coarse spray to improve cleaning and reduce contamination.

5.4 VAPOR-PHASE DEGREASING

5.4.1 Applications and Hazards

A straight vapor-phase degreaser is a steel tank containing a quantity of solvent that is heated to its boiling point by steam or electricity (Figure 5.3). The solvent vapor rises and fills the tank to an elevation determined by the location of a condenser which in its simplest form is a cold water coil or jacket (Figure 5.4). The vapor condenses and returns to the liquid sump. Units are designed for a specific solvent based on its boiling point, vapor density, and latent heat of vaporization (Table 5.5).

Individual workpieces or racks of small parts to be cleaned are lowered into the hot vapor, the vapor condenses on the cold parts, and the surface oils and greases are dissolved by the solvent. This oily condensate drops back into the liquid solvent sump at the base of the tank. The solvent is evaporated continuously to replace the condensed vapor and maintain the vapor blanket. Since the oils are not vaporized, they form a sludge in the bottom of the tank which must be removed periodically. The scrubbing action of the condensing vapor on the workpiece con-

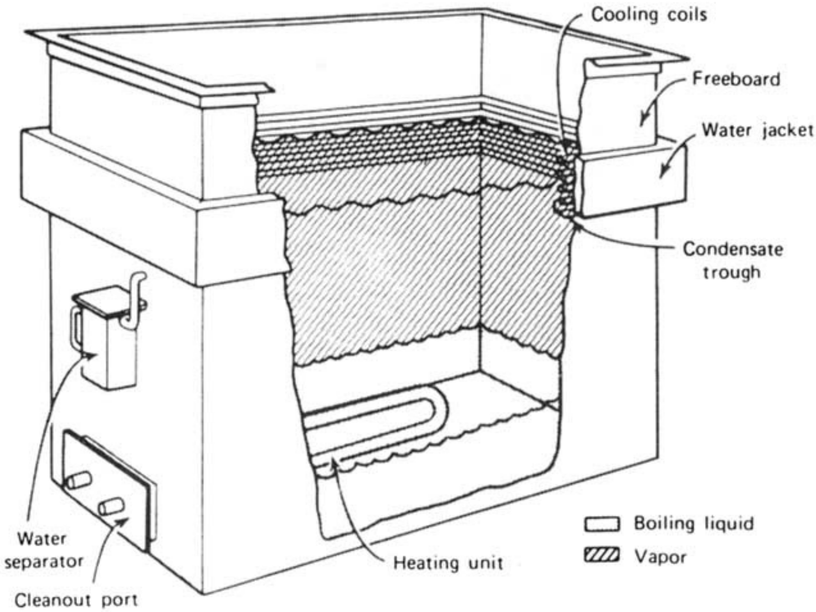

Figure 5.3 Conventional vapor-phase degreaser. Source: *Surface Preparation and Finishes for Metals* by J. A. Murphy. Copyright 1971. Used with permission of McGraw-Hill Book Co.

tinues until the temperature of the part reaches the temperature of the vapor [82°C (182°F) for trichloroethylene]. At this time condensation stops, the part appears dry, and it is removed from the degreaser. The time required to reach this point depends on the solvent, the temperature of the vapor, and the weight of the workpiece and its specific heat. In addition to straight cleaning, the vapor-phase degreaser does an excellent job of drying parts after aqueous cleaning and before plating; it is frequently used for this purpose in the jewelry industry.

The straight vapor-cycle degreaser may not be effective on small, light work since the part will reach the temperature of the vapor quickly and the condensing action stops before the soil is removed from the workpiece. For such applications the vapor-spray cycle degreaser shown in Figure 5.5 is frequently used. The part to be cleaned is first placed in the vapor zone for initial cleaning as in the straight vapor cycle degreaser. A portion of the vapor is condensed by a cooling coil and fills a liquid solvent reservoir. This liquid solvent is pumped to a spray nozzle that can be used to direct the solvent on the part, washing off surface oils and cooling the part, thereby permitting vapor condensation to provide the final cleaning.

A third common degreaser design has a compartment with warm liquid solvent and a second compartment with the conventional vapor zone. This degreaser is used to clean heavily soiled parts or baskets of small parts that nest together and cannot be cleaned effectively by vapor alone. Other designs have both boiling and warm liquid compartments. The boiling liquid compartment maintains the vapor phase when parts of high heat capacity are processed through the unit. In addition to the open-top degreasers described above, which are designed only for batch op-

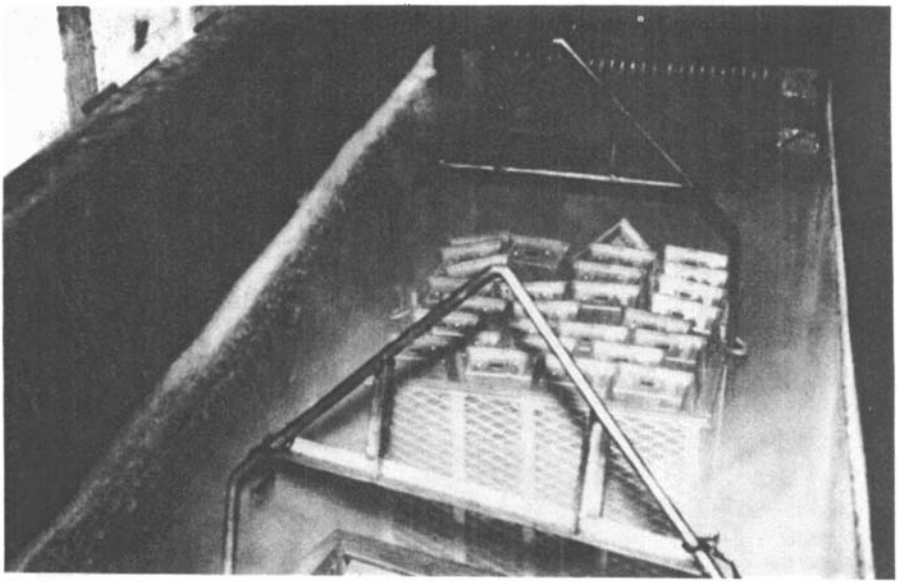

Figure 5.4 Vapor cloud in degreaser.

erations, conveyorized in-line enclosed units are available for high production levels (Figure 5.6).

The demands of the military procurement system in post World War II, then of the aerospace industry, and finally the semiconductor fabricators resulted in stepwise improvements in degreasing equipment and solvent performance. Systems for these demanding applications were derivatives of the various vapor-phase degreasers described above. An ultrasonic degreaser was one development that extended the performance of degreasers. This equipment, shown in Figure 5.7, has a

TABLE 5.5 Properties of Vapor-Degreasing Solvents

	Trichloroethylene	Perchloroethylene	Methylene Chloride	Trichloro trifluoro ethane[a]	Methyl Chloroform (1,1,1-Trichloroethane)
Boiling point					
°C	87	121	40	48	74
°F	188	250	104	118	165
Flammability		Nonflammable under vapor-degreasing conditions			
Latent heat of vaporization (b.p.), Btu/lb	103	90	142	63	105
Specific gravity					
Vapor (Air = 1.00)	4.53	5.72	2.93	6.75	4.60
Liquid (Water = 1.00)	1.464	1.623	1.326	1.514	1.327

[a] Binary azeotropes are also available with ethyl alcohol, isopropyl alcohol, acetone, and methylene chloride.

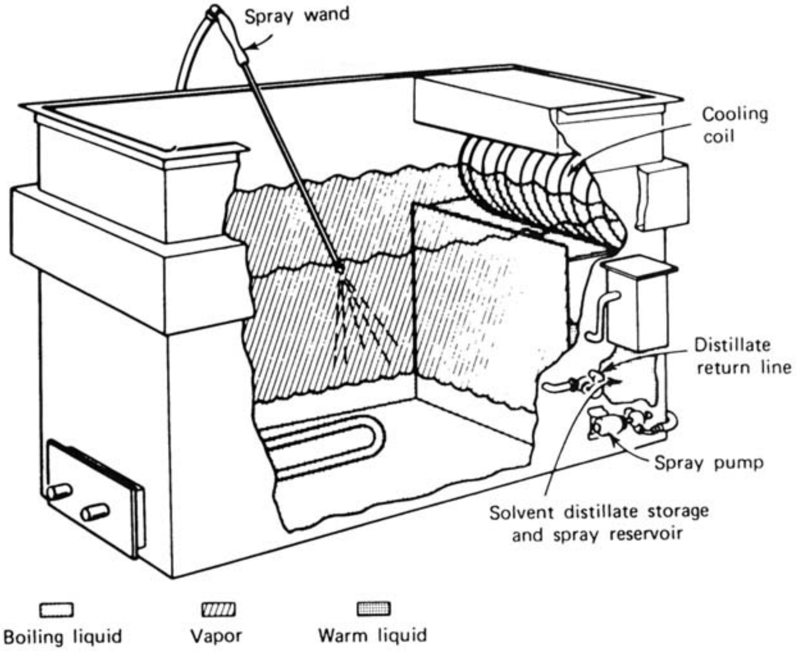

Figure 5.5 Vapor-spray degreaser. Source: *Surface Preparation and Finishes for Metals* by J. A. Murphy. Copyright 1971. Used with permission of McGraw-Hill Book Co.

transducer mounted at the base of the tank which operates in the range of 20–40 kHz. The transducer alternately compresses and expands the solvent, forming small bubbles that cavitate or collapse at the surface of the workpiece. The cavitation phenomenon disrupts the adhering soils and cleans the part. Ultrasonic degreasers use chlorinated solvents at 32–49°C (90–120°F) and aqueous solutions at 43–71°C

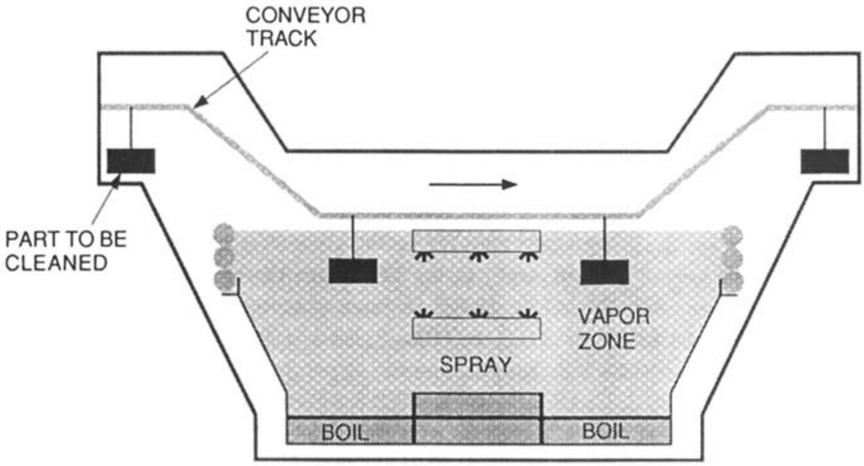

Figure 5.6 Straight-through or conveyorized degreaser.

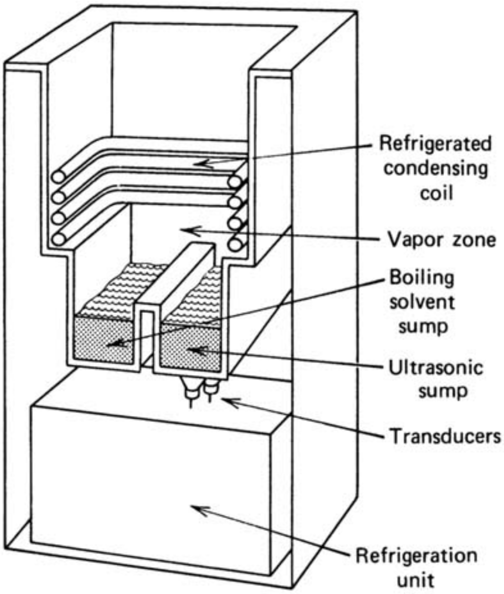

Figure 5.7 Ultrasonic degreaser. Source: Reproduced courtesy of Branson Cleaning Equipment Co.

(110–160°F). These degreasers commonly employ refrigerated or water-chilled coils for control of solvent vapors.

As described in Section 5.2, the popular solvents used with vapor-phase degreasers until the 1990s included trichloroethylene, perchloroethylene, methylene chloride, 1,1,1-trichloroethane, and trichlorotrifluoroethane. The solvents contain a small amount of stabilizer to neutralize any free acid that might result from oxidation of the degreasing liquid in the presence of air, hydrolysis in the presence of water, or pyrolysis under the influence of high temperatures.

Although 1,1,1-trichloroethane and trichlorotrifluoroethane are being banned, trichloroethylene, perchloroethylene, and methylene chloride will continue to see utilization, although there will be ongoing pressure to provide more effective control of solvent vapor for both worker and environmental health reasons. In certain cases equipment designed for chlorofluorocarbons or 1,1,1-trichloroethane will be converted for use with trichloroethylene, perchloroethylene, or methylene chloride. Degreasers are designed for a specific solvent and modifications recommended by the manufacturer must be completed before the solvent is changed.

The rate of loss of solvent vapor to the workplace depends on a number of operating conditions and degreaser design features. An early study by Dow (1978) found that the loss of solvent from an idling open-top degreaser located in an area without significant drafts expressed as pounds of perchloroethylene per square foot per hour is 0.14 for 1,1,1-trichloroethane, 0.20 for trichloroethylene, 0.26 for methylene chloride, and 0.29 for perchloroethylene. The EPA (1979) data on an open-top degreaser operating with trichloroethylene indicates an emission rate of 30.3 g/m^2-min. In a study of an open-top trichloroethylene degreaser equipped with local exhaust ventilation, Wadden et al. (1989) stated that the total emission rate is 30.94 g/m^2-min and the emission rate of an enclosed conveyorized degreaser is 22.36 g/m^2-min. The comprehensive Wadden study is especially useful since it shows that 9.5% of the total emissions of the open-top degreasers escaped to the workplace while only 3% of the total emissions of the enclosed conveyorized degreaser were lost.

Data on the exposures of vapor degreaser operators is meager. The earliest full shift data is shown in Table 5.6 (Hickey, 1977). Shipman and Whim (1980) have presented extensive data on 57 open-top vapor degreasers operating with trichloroethylene in the United Kingdom. Extended personal air samples revealed that in 94% of the samples the TWA was less than 50 ppm and in 86% it was less than 30 ppm. A study of full-shift exposures of 29 Swedish vapor degreaser operators to trichloroethylene over one week showed a median personal air sample concentration of 16 mg/m^3 with a range of measurements of 3–144 mg/m^3 (Ulander et al., 1992).

5.4.2 Controls

The ability to operate vapor degreasers with minimum release of solvent vapors to the workplace depends on the careful integration of the individual control design features shown in Figure 5.8 and summarized in Table 5.7. The controls are designed to minimize diffusion and disturbance losses due to rapid air movement across the top of the degreaser, movement of the load, convective velocities in the freeboard zone, and overloading with subsequent vapor zone collapse. The various controls noted below are discussed in detail in a comprehensive review by the Center for Emissions Control (Anon., 1992).

5.4.2.1 Equipment Design

Condenser. Vapor-phase degreasers should have adequate condensers in the form of water jackets, pipe coils, or both, extending around the tank and driven by cold water or a cryogenic fluid. The condenser establishes the top boundary of the vapor blanket and prevents the escape of vapors into the room. For decades it was recommended that the temperature of the condenser above the vapor line be maintained above room temperature and below 43°C (110°F). The effluent water was regulated to this range, and a temperature indicator or control was usually displayed. Recent studies have revealed the advantages of maintaining the condenser at lower temperatures. As an example, lowering the temperature of the condenser from 29.4 to 10°C (85 to 50°F) on a degreaser operated with 1,1,1-trichloroethane

TABLE 5.6 Full-Shift TWA Concentrations During Vapor Degreasing

Solvent	No. of Measurements	Concentration (ppm)	
		Range	Average
Trichloroethylene	14	5–311	62
Perchloroethylene	6	5–174	40

Source: Adapted from Hickey (1977).

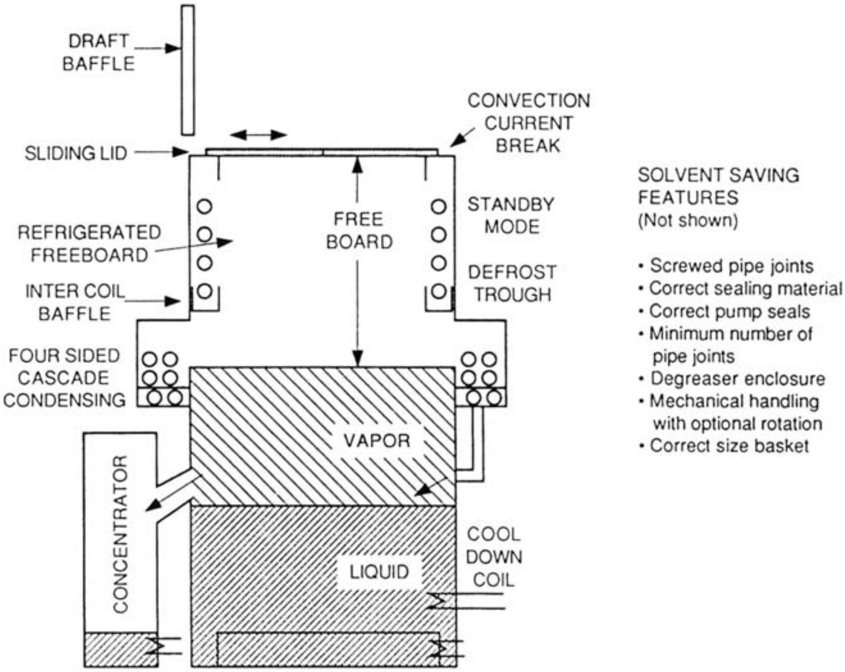

Figure 5.8 Controls on a vapor-phase degreaser. Source: Adapted from Weemes (1990).

reduces the vapor emissions by 39% (EPA, 1992). Impressive reductions in solvent vapor emissions of approximately 40% can also be achieved if a secondary cooling coil operating at temperatures below the main condenser is mounted above the primary condenser on the freeboard inner face.

Freeboard. The vertical distance between the lowest point at which vapors can escape from the degreaser machine and the highest normal vapor level is called the freeboard. Again, the conventional wisdom has been that the freeboard should be at least 40 cm high and not less than half the width of the degreasers. The current recommendation is that the ratio of the freeboard height to the width of the degreaser be no less than 1.0. If the freeboard/width ratio is increased from 0.75 to 1.0 on a conventional degreaser, the vapor emissions are reduced by 19–21%; an increase from 1.0 to 1.25 provides a further reduction of 6–10% (EPA, 1992). Increased freeboard height makes it difficult for the operator to load the unit. This problem can be resolved by placing the degreaser in a pit or providing an elevated work platform for the operator.

Degreaser Cover. Fugitive losses can be reduced nearly 40% by the rigorous use of a tight cover when the degreaser is not in active use. The conventional hinged cover is not recommended since it acts as a vapor pump when the cover is manually opened or closed, resulting in dispersal of the vapor into the workplace. The powered sliding cover shown in Figure 5.8 is easily operated and the sliding action does not disperse the solvent vapor. In the 1980s totally enclosed degreasers

TABLE 5.7 Effectiveness of Various Control Techniques for an Open-Top Vapor Degreaser[a]

Control Technique	Control Efficiency (%)	
	Idling[b]	Working
Manual cover	40	--
Freeboard ratio: 0.75–>1.0	20	20
1.0–>1.25	10	10
Reduced condenser temperature	40	40
Reduced room draft (100–>50 fpm)	50	50
Refrigerator freeboard: above freezing	40	40
below freezing	40	40
Hoist	--	35
Dwell	--	30
Automated cover	40	40

[a] Operating schedule — 6 hr working; 2 hr idle; 16 hr downtime.

[b] Breakdown of total solvent loss: working — 69%; downtime — 22%; idling — 9%.

Source: EPA (1992).

were pioneered in Europe. Over 1500 of these advanced systems are now operational in the United States.

Minimum Drafts at the Degeaser Top. To minimize the effects of drafts, the degreaser should be installed away from open windows, spray booths, space heaters, supply air grilles, and fans. In addition to the judicious location of the degreaser, baffles are effective in minimizing drafts across the top of the degreaser. If the cross draft is reduced from 130 fpm to less than 50 fpm, a 43% reduction in emissions is achieved.

Local Exhaust Ventilation. There is a difference of opinion about the need for local exhaust ventilation on vapor-phase degreasers. Ventilation control may be required depending on the location, maintenance, and operating practices; however, unless it is properly designed, it may increase operator exposure. Local exhaust will certainly increase solvent loss and the installation may exceed air pollution emission limits and therefore require solvent recovery before discharging to outdoors. The parts loading and unloading station is equally important. When baskets of small parts are degreased, it is not possible to completely eliminate drag-out and the unloading station may require ventilation control.

When degreasers are installed in pits, mechanical exhaust ventilation should be provided at the lowest part of the pit. Open flames, electric heating elements, and welding operations should be divorced from the degreaser locations, since the solvent will be degraded by both direct flame and ultraviolet radiation, producing toxic air contaminants.

Thermostatic Switches and Safety Controls. All degreasers should have thermostats to shut off the source of heat under certain operating conditions. The thermostats and other principle controls shown in Figure 5.9 are described below:

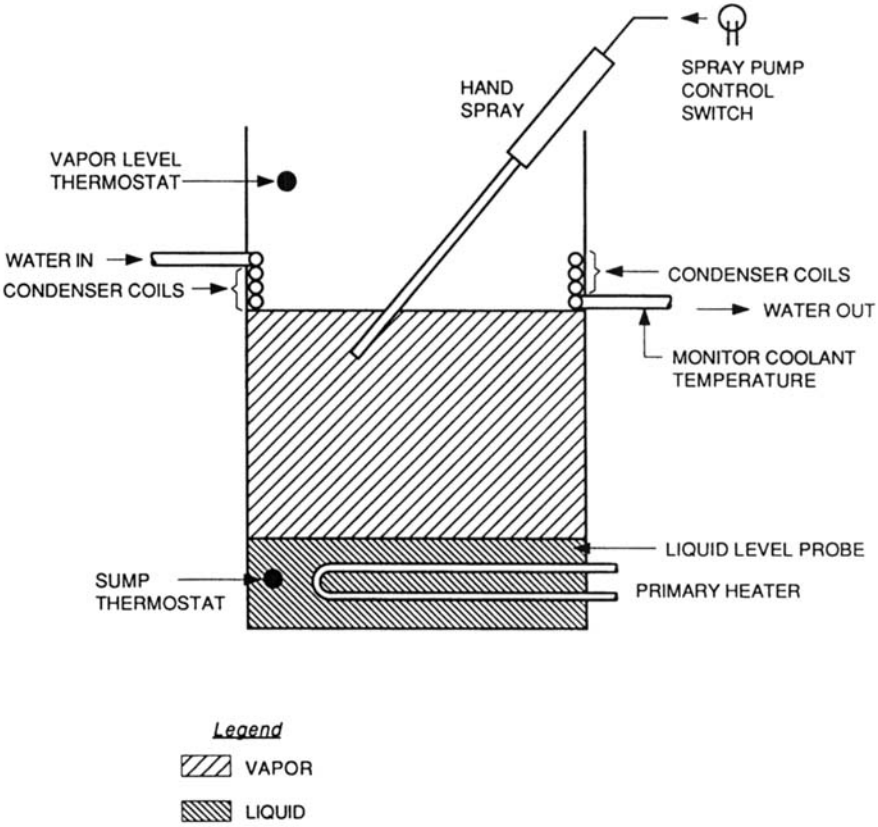

Figure 5.9 Thermostatic controls on vapor-phase degreaser.

Vapor level control	If the vapor cloud rises above this point, the heat to the sump is shut off.
Sump thermostat	If the temperature of the sump fluid exceeds a critical temperature, the heat is shut off.
Coolant flow switch	If the coolant is too warm or if the flow is too low, the heat is shut off.
Liquid solvent level	If the solvent level in the sump drops below a critical level, heat is cut off.
Spray pump control	If the spray is used outside the vapor zone, the power to the pump is shut off.

Piping of Solvent. All piping in the degreaser installation should be installed with Teflon-based pipe dope, or soldered or welded joints should be used.

Material Handling. The previous minimum recommendation was that the hoist should be used with a maximum vertical speed of 11 fpm. In fact, reduction from 11 to 3 fpm will reduce the total losses of solvent 81%. The transport device is designed to permit the operator to hold the load for drainage before removal from the degreaser. In addition, if a basket is used to hold small parts, it should be designed so that it can be rotated to eliminate trapped liquid solvent. To minimize emissions, the action of the operator should be paced by the mechanical assists.

A large workpiece or loaded rack lowered into the degreasers will act as a piston, displacing vapor into the workplace. This effect can be minimized by limiting the cross-sectional area of the load to not more than 50% of the cross-sectional area of the vapor blanket.

Down-Time Cooling. Major reductions in fugitive losses during downtime can be achieved by reducing the sump solvent temperature in a rapid and reproducible way. One system uses a cooling coil immersed in the sump. This feature is only practical if the downtime is long and the degreaser can be brought up to temperature quickly when work must be processed.

5.4.2.2 Work Practice. The installation design features noted above must be integrated with acceptable work practices. Operating precautions proposed by various authorities include the following elements:

1. If the unit is equipped with a water condenser, the water should be turned on before the heat is applied to the solvent.
2. Work should be placed in and removed from the vapor slowly. If a hoist is not available, a support should be positioned to hold the work in the vapor, thereby minimizing the time the operator must spend in the high-exposure zone.
3. The part must be kept in the vapor until it reaches vapor temperature and is dry.
4. Parts should be loaded in a manner that will minimize pullout. For example, cupshaped parts should be inverted.
5. Overloading should be avoided because it will cause displacement of vapor into the workroom.
6. The work should be sprayed below the vapor level.
7. The degreaser tank should be covered when not in use.
8. Hot solvent should not be removed from the degreaser, nor should garments be cleaned in the degreaser.
9. Contaminated liquid solvent, residue from solvent stills, and sludge from bottom clean-out must be handled as hazardous waste.

Vapor-phase degreasers should be cleaned periodically to prevent the accumulation of sludge and metal chips. The solvent should be distilled off until the heating surface or element is nearly, but not quite, exposed or until the solvent vapors fail to rise to the collecting trough. After cooling, the oil and solvent should be drained off and the sludge removed. It is important that the solvent be cooled before draining since removing hot solvent causes serious air contamination and frequently requires the evacuation of plant personnel from the building. A fire hazard may exist during the cleaning of machines heated by electricity because the flash point of the residual oil may be reached; also trichloroethylene is flammable at elevated temperatures. After sludge and solvent removal, the degreaser must be ventilated mechanically before any maintenance work involving flames or welding is undertaken. A person should not be permitted to enter a degreaser or place his head in one until all controls for entry into a confined space have been put in place. Anyone entering a degreaser should wear a respirator suitable for conditions immediately dangerous to life or health; a lifeline should be held by an attendant. In such circumstances, anesthetic concentrations of vapor may be encountered and the oxygen concentration may be insufficient. Such an atmosphere may cause unconsciousness with little or no warning; a number of deaths have occurred because of failure to observe the foregoing precautions.

As mentioned previously, trichloroethylene is flammable at the elevated temperatures present in degreasers. When heated above 43°C (110°F), the solvent has a narrow flammable range around 20% by volume. This range increases with temperature, and above 63°C (135°F) the flammable range is from 15 to 40% by volume. The ignition temperature is 410°C (770°F). These conditions do not ordinarily occur in plant atmospheres, but may occur within a degreaser. Trichloroethylene vapors will not explode violently under any circumstances, but the vapors may burn slowly to form dense smoke and chlorine, hydrogen chloride, and phosgene. Although perchloroethylene vapor will not ignite or burn, oils or greases accumulated in the degreaser will; therefore, sources of ignition, especially overheating with electric heaters, should be avoided during distillation for sludge removal.

The substitution of one degreaser solvent for another as a control technique must be done with caution. Such a decision should not be based solely on the relative TLVs, but one must consider the total toxicology of the solvents, their photochemical properties, and the physical properties of the solvents including vapor pressure. As noted earlier, a change in solvent may require a change in the degreaser design and operating configuration.

In Chapter 10 reference is made to the decomposition of chlorinated solvents under thermal and ultraviolet stress from welding with the formation of chlorine, hydrogen chloride, and phosgene. Since degreasers using such solvents are frequently located near welding operations, this problem warrants attention. In a laboratory study of the decomposition potential of methyl chloride, methylene chloride, carbon tetrachloride, ethylene dichloride, 1,1,1-trichloroethane, *o*-dichlorobenzene, trichloroethylene, and perchloroethylene, only the latter two solvents decomposed in the welding environment to form dangerous levels of phosgene, chlorine, and hydrogen chloride (Figure 5.10). Certain chlorinated materials will also degrade if introduced into direct-fired combustion units commonly used in industry. If a highly corroded heater is noted in the degreaser area, it may indicate that toxic and corrosive air contaminants are being generated.

The EPA National Air Pollution Control Techniques Advisory Committee is preparing a national emission standard for vapor degreasers. This standard, covering both batch and in-line (conveyorized) degreasers, will include operating records, work practices, and solvent consumption records.

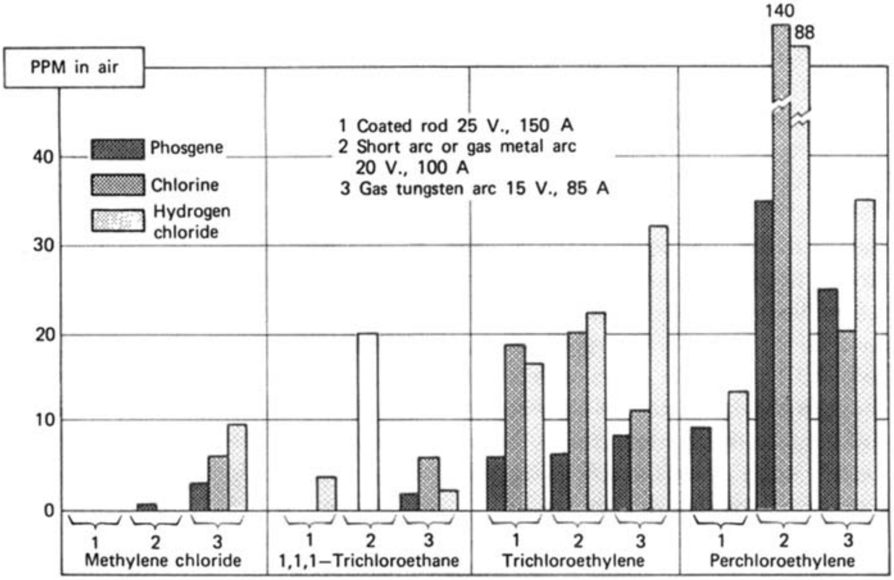

Figure 5.10 Decomposition of halogenated solvents. Source: Reproduced courtesy of the Dow Chemical Co. (Dow, 1977).

Medical control is especially important for degreasing operators and should include both preplacement and periodic physical examinations. Specific medical screening is advisable for persons with cardiovascular disease. Little data are available on medical effects from exposure to degreasers solvents in the United States. A major review of experience with these solvents in the United Kingdom for the period 1961–1980 was based on reported "industrial gassings poisonings" by trichloroethylene, perchloroethylene, and 1,1,1-trichloroethane (McCarthy and Jones, 1983). The authors state that 1,1,1-trichloroethane was not used in the United Kingdom before 1970. In a total of 384 cases, 288 were from trichloroethylene, 44 involved handling perchloroethylene, and 52 were from 1,1,1-trichloroethane. In 168 cases the workers were found unconscious and 14 cases were fatal. Ten of the fatal cases occurred in confined space situations.

5.5 ALTERNATIVE DEGREASING SYSTEMS

In the early 1990s a major effort was undertaken to develop and evaluate alternative cleaning techniques to replace the banned chlorofluorocarbons. The options included a range of terpenes, aqueous and semiaqueous cleaners, and advanced hydrocarbon fluids.

D-Limonene is a monoterpene derived from the citrus oils obtained from lemon and orange pulp and seeds. It has seen wide consideration as a substitute for CFCs and chlorinated hydrocarbon degreasing fluids in the metal and electronic industries. The scant medical literature on this material indicates that it is a skin irritant, may be a skin allergen, and a multiyear gavage study of male rats demonstrated evidence of kidney malignancies. Although it has seen significant new use as a degreasing agent, extensive plant equipment changes must be made before introducing it since terpenes are combustible and have a odor threshold in the parts per billion range.

An industrial hygiene and medical effects study of the use of a D-limonene solvent in two aircraft maintenance shops was conducted by NIOSH (Kiefer, 1993). In this study the proprietary solvent also contained low concentrations of butyl carbitol, diethanolamine, and ethanolamine. In shop 1 the D-limonene solvent was used in a soak tank to clean metal tubing and in shop 2 manual brushing was employed to effect cleaning of wheel hubs with this solvent. Out of a total of 12 extended time personal air samples in shop 1, eight were less than 1.0 ppm and four were in the range of 1–5 ppm. In shop 2 the three samples were 11.58, 114.30, and 14.63 ppm. The other solvent components were all noted to be in very low concentrations and did not constitute a hazard. The medical evaluation based on a self questionanaire completed by 14 employees including two cases of contact dermatitis, while seven employees described an increase in skin dryness, and four reported nasal or throat irritation.

In the early 1990s a number of semiaqueous cleaning processes were developed in response to the banning of chlorofluorocarbons and 1,1,1-trichloroethane. Various solvents including advanced hydrocarbons, terpenes, dibasic esters, glycol ethers, and *n*-methyl pyrrolidone were used in conjunction with surfactants to provide effective systems (Anon 1992). A representative process using such a semiaqueous cleaner includes the initial immersion of parts in the hydrocarbon wash tank, and frequently an emulsion tank followed by a rinse tank (Figure 5.11).

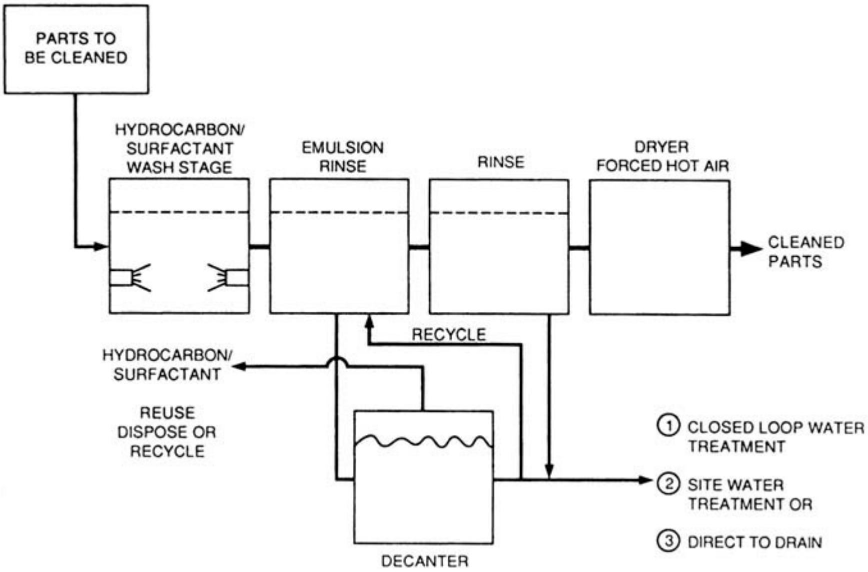

Figure 5.11 Semiaqueous cleaning process using an immiscible hydrocarbon solvent. Source: EPA (1991).

Drying of the workpiece, an energy-intensive step, depends on the specific requirements of the operation. Adequate drying may be achieved by spinning, wiping, or an air blow-off. If totally dry parts are required, a Class A hot air dryer must be used.

The new semiaqueous processes have a number of advantages over previous applications of chlorofluorocarbons and 1,1,1-trichloroethane solvents while providing comparable cleaning for a range of surface soils encountered in general metalworking. Degreasing equipment previously used with chlorofluorocarbons and 1,1,1-trichloroethane may be retrofitted for these semiaqueous systems by removing electrical heaters and condensing coils and adding ventilation and drying components. The most prudent approach, however, is to purchase equipment designed specificallly for this work.

The advantages cited by the manufacturers for semiaqueous processes are elimination of ozone-depleting solvents, low toxicity, high flash point, and low vapor pressure with resulting minimum worker exposure to solvent vapors. Another important feature is the ability to easily separate the solvent and water, thereby minimizing the need for extensive water treatment. On the negative side, the active component may be declared nonexempt by the EPA, a water rinse may be required, and a drying operation is necessary.

For decades aqueous, or so-called parts washing, has been used for the removal of salts, rust, scale and other inorganic soils from ferrous metals. The technique has now been modified to remove greases and oils. The proprietary solutions are based on detergents, surfactants, sequestering agents, saponifers, emulsifiers, stabilizers, and chelators. Both acidic and alkaline cleaners are available for use in immersion and spray cleaning equipment. Brent et al. (1993) present a comprehensive review of the aqueous systems that are available as alternatives to solvent degreasing.

REFERENCES

Anon., (1992), *Solvent Cleaning (Degreasing)*, Center for Emissions Control, Washington DC.

Anon. (1993), *Science*, **259**, 28–29.

Brent, R. J., Heyl, C. M., and Tress, J. P. (1993), *Alternative Cleaning Systems*, presented at Fabtech International '93, Oct. 18, Chicago, IL.

Burgess, W. A. (1975), personal communication.

Dow Chemical (1977), *Modern Vapor Degresing and Dow Chlorinated Solvents*, Bulletin Form 100-5185-77, Midland MI.

Dow Chemical (1978), *How To Select a Vapor Degreasing Solvent*, Bulletin Form 100-5321-78, Midland MI.

DuPont Chemicals (1992), *U.S. Regulatory Update*, November 1992, DuPont, Wilmington DE.

EPA (1979), *Organic Solvent Cleaners—Background Information for Proposed Standards* (EPA450/2-78-045a), Office of Air Quality Planning and Standards, U.S. Environmental Protection Agency, Research Triangle Park, NC.

EPA (1991), *CFC-113 and Methyl Chloroform in Precision Cleaning Operations*, Office of Air Quality Planning and Standards, EPA-450/3-89-030, U.S. Environmental Protection Agency

EPA (1992), *Overview of Halogenated Solvent Cleaning/Degreasing NESHAP,* presented to the National Air Pollution Control Technology Advisory Committee, Office of Air Quality Planning and Standards, U.S. Environmental Protection Agency, October.

Hickey, J., (1977), personal communication.

Kiefer, M., Bresler, F., and Salisbury, S. (1993), *Investigation of D-Limonene Use During Aircraft Maintenance Degreasing Operations*, Presented at the American Industrial Hygiene Conference, May 20, 1993, New Orleans.

McCarthy, T. B. and Jones, R. D. (1983), *Brit. J. Ind. Med.*, **40**, 450–455.

NIOSH (1988), Health Hazard Report No. HETA 88-128-1947, National Institute for Occupational Safety and Health, Cincinnati, OH.

Shipman, A. J. and Whim, B. P. (1980), *Ann. Occup. Hyg.*, **23**, 197–204.

Ulander, A., Selden, A., and Ahlborg, G. (1992), *Am. Ind. Hyg. Assoc. J.*, **53**, 742–745.

Wadden, R. A., Scheff, P. A., and Franke, J. E. (1989), *Am. Ind. Hyg. Assoc. J.*, **50**, 496–500.

Weemes, G. C., (1990), *Design of Equipment for Use with HCFC Cleaning Fluids*, presentation at the International Conference on CFC and Halon Alternatives, Baltimore, MD, December 3–5, 1991.

Whim, B. P. Personal communication, (1980).

Wolf, K., Yazdani, A., and Yates, P. (1991), *J. Air Waste Manage. Assoc.*, **41**, 1055–1061.

CHAPTER 6

Grinding, Polishing, and Buffing

6.1 INTRODUCTION

These operations are grouped together because they all involve controlled use of bonded abrasives for metal finishing operations; in many cases, the operations are conducted in the sequence noted. This discussion covers the nonprecision applications of the equipment listed in Table 6.1; precision grinding techniques including tool and cutter grinding are discussed in Chapter 9.

6.2 APPLICATIONS

6.2.1 Grinding

Rough grinding or nondimensional grinding is widely used in industry. Heavy-duty foundry applications include cutting-off gates, sprues and risers, and removal of rough protrusions (snagging) from castings after shakeout. The forging industry uses grinding techniques to remove surface scale on billets before and after forging to remove flashing from completed parts. Welders use chipping and grinding equipment to remove scale and "face-off" weldments. Lighter applications of grinding techniques include deburring of parts in sheet metal and machine shops. Grinding techniques are employed on parts ranging from small door hinges to multiton turbine casings.

Grinding requires wheels, disks, and elements of various geometries made of selected abrasives in bonding matrices. As discussed in Chapter 31, the common abrasives are aluminum oxide and silicon carbide; less common are diamond and

TABLE 6.1 Source of Airborne Contaminants from Grinding, Polishing, and Buffing

Equipment Types	Equipment Subtypes
Surface-type grinders	Surface grinders Roll grinders Snaggers Slab and billet grinders Swing grinders
Pedestal-type grinders	Pedestal grinders Bench grinders Floorstand grinders Tool grinders
Disk grinders and polishers	Single-spindle disk grinders Double-spindle disk grinders Disk polishers
Internal grinders	Internal grinders
Abrasive cutting-off machines	Abrasive cutting-off machines
Pedestal-type polishers and buffers	Wheel and drum polishers Backstand idler polishers Buffing lathes
Belt polishers	Belt grinders and polishers (using flat belt surface)
Portable grinders, polishers, and buffers	Portable grinders Portable polishers Portable buffers
Multiple polishers and buffers	Multiple-belt polishers Multiple-head buffers

Source: NIOSH (1975).

cubic boron nitride and a variety of naturally occurring abrasives. Wire brushes are included in this portrayal. Although these elements do not use abrasives, they are used in conjunction with abrasive elements.

The abrasive bonding material is designed to provide mechanical strength for the wheel or disk and yet release the spent abrasive granules to renew the cutting surface. Vitrified glass is the most common bonding agent. The vitrified grinding wheel is made by mixing clay and feldspar with the abrasive, pressing it into shape and firing it at high temperature to form a glass coating to bond the abrasive grains. This technique permits the manufacturer to make the wheel in a range of hardnesses to meet the customer's needs; in general, for efficient cutting, the harder the workpiece metal, the softer the wheel matrix. Resinoid bonded wheels, the next most common type, are used for a range of applications including snagging and cut-off wheels. In cut-off wheels the abrasive–resin matrix is reinforced with metal or fiberglass to provide the necessary strength and flexibility.

Sodium silicate (water glass), the softest bonding agent, is used in grinding wheels that require high wheel wear while remaining cool. Rubber bonding agents are routinely used for final finishing, polishing applications, and cut-off wheels.

Diamond and boron nitride wheels are bonded with a vitrified, resinoid, or metal bonding system based on copper or a ceramic. The performance of a conventional diamond bonded system degrades when grinding iron-, cobalt-, or nickel-based alloys because of chemical reactivity. For these applications, sintered diamonds are bonded with borides, nitrides, carbides, and various oxides (Wentorf et al., 1980).

The abrasive industry utilizes the standard labeling nomenclature shown in Figure 6.1 to identify the grinding wheel design (ANSI, 1990). This information is invaluable for identifying the possible air contaminants released from the grind-

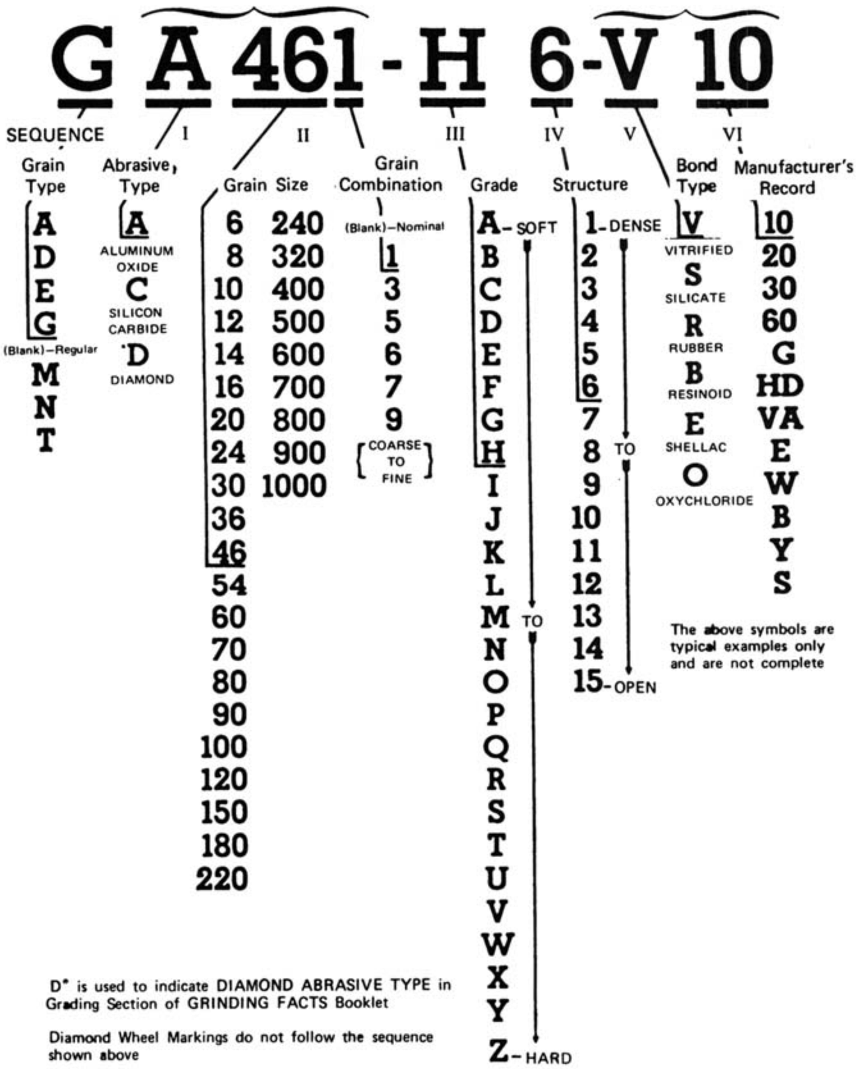

The above symbols are typical examples only and are not complete

D* is used to indicate DIAMOND ABRASIVE TYPE in Grading Section of GRINDING FACTS Booklet

Diamond Wheel Markings do not follow the sequence shown above

Figure 6.1 Identification of grinding wheels. Source: Courtesy of American National Standards Institute.

ing wheel. Of specific interest to the occupational health specialist is identification of the abrasives and the bonding agent (Table 6.2).

Little information is available on the generation rate of grinding wheel debris in various applications; however, the wheel components normally make up a small fraction of the total airborne particles released during grinding. As noted in Table 6.3, most of the particles are released from the workpiece. In the case of cast iron only 2% of the total particulate is from the griding wheel (NIOSH, 1975).

After extended use, the cutting surface of the grinding wheel may load, glaze, or lose its profile. At this point the wheel must be dressed, that is, the working surface of the wheel must be faced off. Depending on the type of wheel and its application, it may dressed (trued) with a diamond tip tool or crushed-dressed with a serrated steel roller. During this brief period, a significant amount of the wheel is removed to form a coarse dust cloud with minimal respirable dust.

6.2.2 Polishing

Polishing techniques are used to remove workpiece surface imperfections such as tool marks; this technique may remove as much as 0.1 mm of stock from the workpiece. The abrasive, usually aluminum oxide or silicon dioxide, is bonded to the surface of a belt, disk, or wheel in a closely governed geometry. The workpiece is commonly applied to the moving abrasive carrier by hand, although a number of machines are available for automation of polishing operations.

6.2.3 Buffing

The buffing processes differ from grinding and polishing in that little metal is removed from the workpiece. Buffing generates a high-luster surface by smearing any surface roughness with a lightweight abrasive. Red rouge (ferric oxide) and green rouge (chromium oxide) are used for soft metals, aluminum oxide for harder metals. The abrasive is blended in a grease or wax carrier that is packaged in a bar or tube. The buffing wheel is made from cotton or wool disks sewn together

TABLE 6.2 Grinding Wheel Specification Nomenclature

Abrasives (First Letter in Specification)	
A	Aluminum oxide
C	Silicon carbide
D or ND	Natural diamonds
SD	Synthetic diamonds
CB or CBN	Cubic boron nitride
Bond (Last Letter in Specification)	
V	Vitrified
B	Resinoid
R	Rubber
S	Silicate

TABLE 6.3 Sources of Equipment-Generated Materials from Grinding, Buffing, and Polishing Operations

	Sources (% of Total Mass)		
	Workpiece	Abrasive	Bonding Media
Heavy grinding	80	16	4
Light grinding	95	4	1
Polishing	98	2	0
Buffing	20	40	40

Source: Adapted from NIOSH (1975).

to form a wheel or "buff". Significant textile material becomes airborne during buffing. The abrasive is applied to the perimeter of the wheel, and the workpiece is then pressed against the rotating wheel. In another format the working surface of the wheel is coated with an adhesive and then rolled in granular abrasive. After the adhesive–abrasive coating is dry, the hard coating on the perimeter of the wheel is crushed to provide a flexible surface that can be applied to the work.

The wheels are normally mounted on a buffing lathe that is similar to a grinding stand; high-production buffing of parts with simple geometry can be done with semiautomatic equipment.

6.3 EXPOSURES AND HEALTH EFFECTS

Unfortunately neither the health status of grinders, polishers, and buffers nor the exposure profile of this population has been studied in a comprehensive manner. The principal studies have been associated with grinders working in the finishing rooms of foundries. As noted in Chapter 8, a wide range of fixed and portable grinders, swing-frame grinders, and cut-off wheels are used in the finishing room. The first step in casting cleaning is the removal of extraneous metal; a common technique is the cut-off wheel. The castings are then cleaned by abrasive blasting to remove the bulk of the fused-on sand. The third and final finishing step varies greatly depending on the product. Small parts may be finished on a floorstand grinder (Figure 6.2) and moderate-sized parts may be brought to an exhaust booth or a workstation with a downdraft bench (Figure 6.3). If the part cannnot be moved, the worker brings a portable grinder to the casting (Figure 6.4). In the majority of foundry studies, a significant fraction of grinders were exposed to excessive concentrations of quartz (O'Brien et al., 1992).

Although a study by Blair (1980) did not reveal excess mortality in metal polishing workers, a study by Sparks and Wegman (1980) demonstrated excess stomach cancer in a group of polishers in the jewelry industry. A third study in the early 1980s by Jarvholm et al. (1982) suggested a possible cancer hazard among polishers. The authors of all three studies suggest that a more extensive review of polishers be undertaken. Because of the uniqueness of the polishing activities at each facility, it is difficult to extend these results to other polishing populations.

Figure 6.2 Two workers on a floorstand grinder removing burrs from small castings.

The hazard potential from grinding, polishing, and buffing operations depends on the specific operation, the workpiece metal and its surface coating, and the type of abrasive system in use. The results of a NIOSH-sponsored study of the ventilation requirements for grinding, polishing, and buffing operations shows that the major source of airborne particles in grinding and polishing is the workpiece, whereas the abrasive compound and the wheel represent the principal sources of

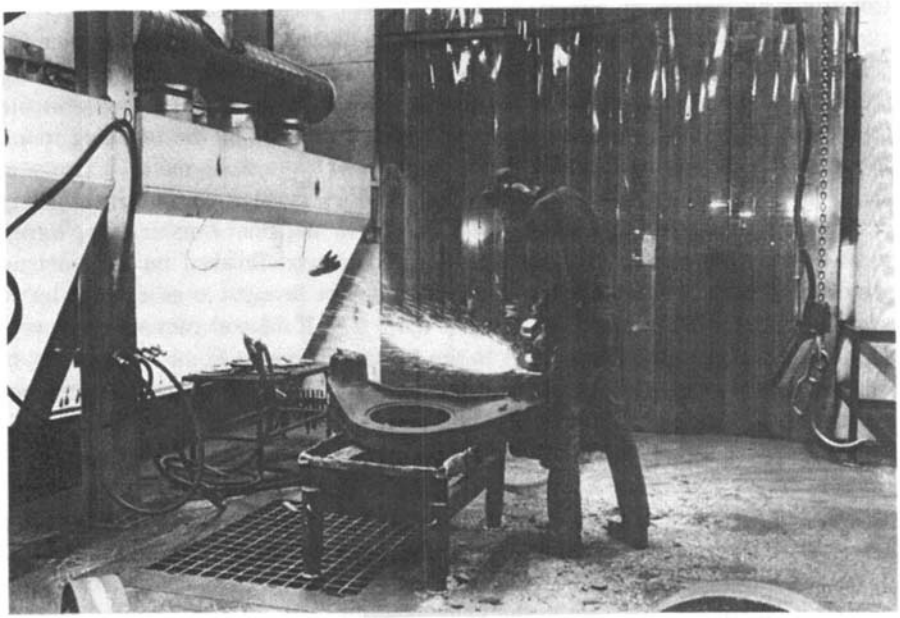

Figure 6.3 Well-integrated grinding workstation in a foundry. (Photo by Matti Koivumaki)

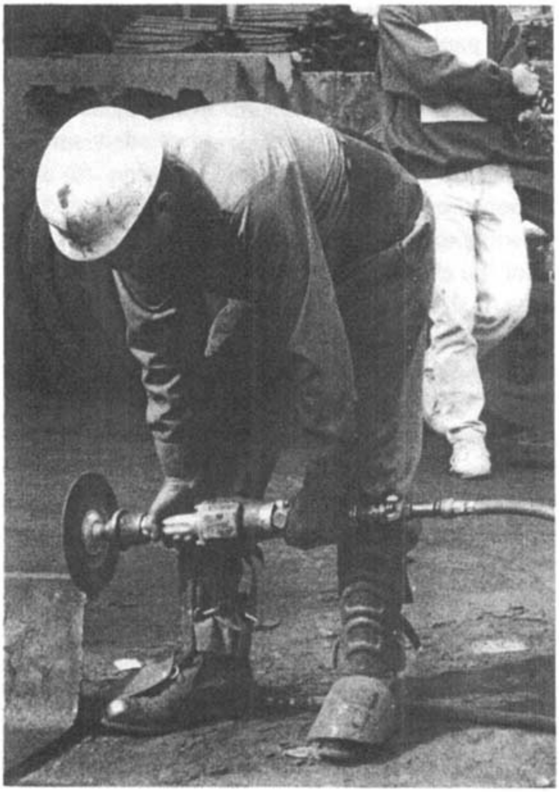

Figure 6.4 A portable grinder.

contamination in buffing (NIOSH, 1975). Few data are available on the effect of the metal type on airborne levels of contaminants, although limited tests on three metals in the NIOSH study showed that grinding titanium generated the most dust, a 1018 steel alloy was the next dustiest, and aluminum was the least dusty. Certainly the type of metal worked and the construction of the abrasive system govern the generation rate and the size characteristics of the dust; however, the data necessary for a detailed assessment of this matter are not available.

A listing of the metal and alloys worked and information on the nature of the materials released from the abrasive system are needed in order to evaluate the exposure of the operator. In many cases, the exposure to dust can be evaluated by means of personal air sampling with gravimetric analysis. If dusts of toxic metals are released, specific analysis for these contaminants is necessary.

Occasionally operators complain of odor and eye irritation on operations using cut-off wheels and abrasive-coated paper and belts. Since these abrasives are bonded with phenol or urea formaldehyde, one should consider sampling for formaldyde, although in the author's experience air concentrations are usually quite low. Turner et al. (1984) did identify significant concentrations of formaldehyde when reviewing complaints of eye and respiratory irritation in a naval shipboard population. The contaminant was traced to a large quantity of urea formaldehyde resin-bonded abrasive paper stored in a confined space with poor ventilation.

The extent of hand–arm vibration syndrome (HAVS) in populations working with a variety of portable grinders is illustrated in a shipyard study (NIOSH, 1990). A local clinic reported that 70% of the shipyard grinders suffered finger blanching, a condition caused by excessive hand–tool vibration. An on-site evaluation of 11 powered hand tools used by this group of workers included three grinder models, four burring tools, and four miscellaneous tools. NIOSH investigators concluded that "most of the eleven tools should be limited to 4 or fewer hours of use during an 8-hour work shift to be within the 1989–1990 ACGIH Threshold Limit Value for hand /arm vibration exposure."

In discussing the magnitude of this problem the report states that "Hand–Arm Vibration Syndrome (HAVS) can affect workers who have extensively used vibrating hand tools." Loggers who use gasoline-powered chain saws, foundry workers who use pneumatic air hammers and grinding wheels, and miners who use pneumatic drills have been the occupational groups most extensively studied. Usually the first symptoms experienced by affected workers are numbness and tingling of the hands and fingers similar to that reported by people with carpal tunnel syndrome. After a variable period of tool use (depending on the intensity of the vibration produced by the tool), workers will notice that one or more fingertips become white and numb after exposure to cold. The worker may also notice decreased hand dexterity and an impaired sense of touch in the hands. If vibration exposure continues, symptoms can increase to the point where all fingers of both hands frequently experience local vasospasm and finger blanching upon even mild cold exposure.

Although the risk of HAVS is generally acknowledged in the use of portable tools, the vibration problem in pedestal-mounted tools is frequently overlooked. In one study of pedestal grinders, the total work population in a finishing room developed vibration white finger with an average latency period of 10.3 months (Starek, et al., 1983).

6.4 CONTROL OF HEALTH HAZARDS

The need for local exhaust ventilation on grinding operations has been addressed by British authorities (United Kingdom Department of Employment, 1974), who state that control is required if one is grinding toxic metals and alloys, ferrous and nonferrous castings produced by sand molding, and metal surfaces coated with toxic material.

The same source also states that ventilation control is not needed if steel surfaces are ground prior to welding, forging, stamping, and precision grinding. This statement may apply to mild steel; but if alloy steels are worked, ventilation may be required during these operations. Control of exposures from foundry grinding operations should include the removal of fused sand or toxic metal coatings from the castings by abrasive blasting under controlled conditions before grinding is performed.

One can extend the application of the guidelines on grinding to polishing. The ventilation requirements for buffing, however, are principally based on the large amount of debris released from the wheel, which may present a housekeeping problem and a potential fire risk if not controlled by local exhaust ventilation.

The hood designs for grinding, polishing, and buffing are based on a tight hood enclosure with minimum wheel–hood clearance to control dust at a minimum exhaust volume. An adjustable tongue on the hood also reduces the air induced by wheel rotation at high speed. On buffing operations, the hood is usually designed with a settling chamber to minimize plugging of the duct with coarse textile wheel debris.

A series of eight design plates for grinding, polishing, and buffing operations are presented in *Industrial Ventilation* (ACGIH,1992), making it the most comprehensive design coverage for any group of operations. Although the ventilation control designs for fixed location grinding, polishing, and buffing are effective it is difficult to provide ventilation controls for portable grinders used on large weldments, castings, and forgings. Flexible exterior hoods positioned by the worker may be effective; for large, high-production shops, the hood design may be customized for a specific workpiece. However, on many applications this conventional approach does not provide good dust control.

A more effective approach for dust control on portable tools is the low-volume–high-velocity exhaust system with the exhaust hood integral to the grinder (Fletcher, 1988). Since the hood is a fixed component of the grinder, the success of the approach does not rely on the worker maintaining the position of the hood close to the grinding point to achieve adequate capture velocity. The ability of low-volume–high-velocity systems to achieve high collection efficiency at exhaust volumes of one tenth the conventional exhaust system is also an impressive feature. Although this approach has been well received in Europe, American workers have resisted its use because of the additional bulk and weight. Worker resistance may be minimized by suspending the grinder from an overhead boom with a counterweighted suspension to reduce the effort required to maneuver the grinder.

O'Brien et al. (1992) studied the tools and operations that contribute to silica exposure in the hand grinding of steel castings in booths equipped with downdraft hoods suitable for grinding small- to medium-sized parts. The data showed that the greater the diameter of the grinding or cut-off wheel, the greater the dust exposure. In the foundry under study the downdraft booth did not provide effective containment owing to the size of the castings. In addition, the air-cleaning system, designed to permit recirculation of air, was operating at only 50% efficiency. The authors recommended that the foundry adopt a low-volume–high-velocity capture system.

On many operations, none of the approaches described above will provide adequate control and a grinding booth is the best alternative. Heinsohn et al. (1982) have presented design information on such booths. The performance of the conventional hoods on grinding, polishing, and buffing operations should be checked periodically. Because the hood entry loss factor for conventional hoods is known, the hood static suction method is an efficient way to evaluate the exhaust rates quickly.

A strategy for the protection of grinders, polishers, and buffers from HAVS has been clearly proposed in the NIOSH criteria document (NIOSH,1989) and includes reducing the intensity and exposure duration of the vibration as well as identifying the vibration-sensitive individual and the early onset of the disease. The control approaches include redesigning tools, following safe work practices, utilizing protective equipment, and monitoring exposure and health.

Safety hazards from bursting wheels operated at high speed and the fire hazard from handling certain metals such as aluminum and magnesium are covered elsewhere, but these problems affect the design of hoods and the design of wet dust collection systems (ANSI, 1988).

REFERENCES

ACGIH (1992). *Industrial Ventilation, A Manual for Recommended Practice*, 22nd ed., Committee on Industrial Ventilation, American Conference of Governmental Industrial Hygienists, Cincinnati, OH.

ANSI (1988), *The Use, Care, and Protection of Abrasive Wheels*, ANSI B7.1-1988, American National Standards Institute, New York.

ANSI (1990), *Standard Markings for Identifying Grinding Wheels and Other Bonded Abrasives*, ANSI B74.13-1990, American National Standards Institute, New York.

Blair, A. (1980), *JOM*, **22**, 158–162.

Fletcher, B. (1988), *Low-Volume–High-Velocity Extraction Systems*, Report No. 16, Bootle, United Kingdom: Health and Safety Executive, Technology Division.

Heinsohn, R. J., Johnson, D., and Davis, J. W. (1982), *Am. Ind. Hyg. Assoc. J.*, **43**, 587.

Jarvholm, B., Thuringer, G., and Axelson, O. (1982), *BJOM*, **39**, 196–197.

NIOSH (1975), Ventilation requirements for grinding, buffing, and polishing operations. NIOSH Publ. No. 75-105, National Institute for Occupational Safety and Health, Cincinnati, OH.

NIOSH (1989), Criteria for a Recommended Standard; *Occupational Exposure to Hand–Arm Vibration*, NIOSH Publ. No. 89-106, National Institute for Occupational Safety and Health, Cincinnati, OH.

NIOSH (1990), NIOSH Health Hazard Evaluation Report, HETA 87-348-2011, Electric Boat, Groton, CT, National Institute for Occupational Safety and Health, Cincinnati, OH.

O'Brien, D., Froelich, P. A., Gressel, M. G., Hall, R. M., Clark, N. J., Bost, P., and Fischbach, T. (1992), *Am. Ind. Hyg. Assoc. J.*, **53**, 42–48.

Sparks, P. J. and Wegman, D. H. (1980), JOM, **22**, 733–736.

Starek, J., Farkkila, S., Aatola, S., Pyyko, I., and Korhonen, O. (1983), *Br. J. Ind. Med.*, **40**, 426.

Turner, L. K., Warren, K. R., Baker, L. R., and Lang, S. T. (1984), *Am. Ind. Hyg. Assoc. J.*, **45**, 499–500.

United Kingdom Department of Employment, (1974), "Control of Dust from Portable Power Operated Grinding Machines (Code of Practice)," London.

Wentorf, R. H., Devreiss, R. C. and Bundy, F. P. (1980), *Science*, **208**, 873–880.

PART FOUR

METAL PRODUCT FABRICATION

CHAPTER 7

Forging

7.1 INTRODUCTION

The practice of forging, the forming of metal to a given size and shape by impact or pressure, imparts desirable metallurgical properties to the workpiece that cannot be obtained in any other fashion. Industry could not function as it now does without forged parts. A wide range of metals and alloys are processed by cold and hot forging. More than one-half the forging tonnage produced is carbon and alloy steels, microalloy metals, and aluminum; the balance includes stainless steels, high-temperature superalloys, copper-base alloys, magnesium, and titanium. In the forging of complex parts, the workpiece is frequently cycled between forging and rough machining operations such as in-process grinding. For clarity, this discussion will consider only those operations conducted at the forging location.

7.2 FORGING PRACTICE

Forging is done by hammer or press equipment with open or closed impression dies (FIA, 1985). In drop hammer forging (Figure 7.1) the bottom half of the die is positioned on an anvil isolated from the frame of the hammer. The top half of the die is attached to a vertical ram that is raised by an air or steam cylinder and then dropped by gravity or driven downward by air or steam. An operator controls the force of the impact and the frequency of the blows. Hammer forging represents two-thirds of the total forging production in the United States and uses a variety of techniques (Figures 7.2 and 7.3). In forging presses the top die of the press is powered by a mechanical or hydraulic ram and the workpiece is shaped by a slow, single stroke. Presses are used in both open and impression die forging.

Forging can also be classed by the temperature at which the workpiece is processed. Cold forging of parts with relatively simple geometry is done at room temperature. Hot forging is the plastic deformation of metal at a temperature above its recrystallization point, usually in excess of 870°C (1600°F) (Table 7.1). Forging at intermediate temperatures of 540–820°C (1000–1500°F) is sometimes called warm forging. In isothermal forging the die and the workpiece are held at temperatures of approximately 1090°C (2000°F) in an inert environment.

Hot forging presents the widest range of health hazards and is given principal attention in this discussion. As noted in Figure 7.4 metal stock is cut to size, the workpiece is heated to forging temperature, and it is then forged between heated

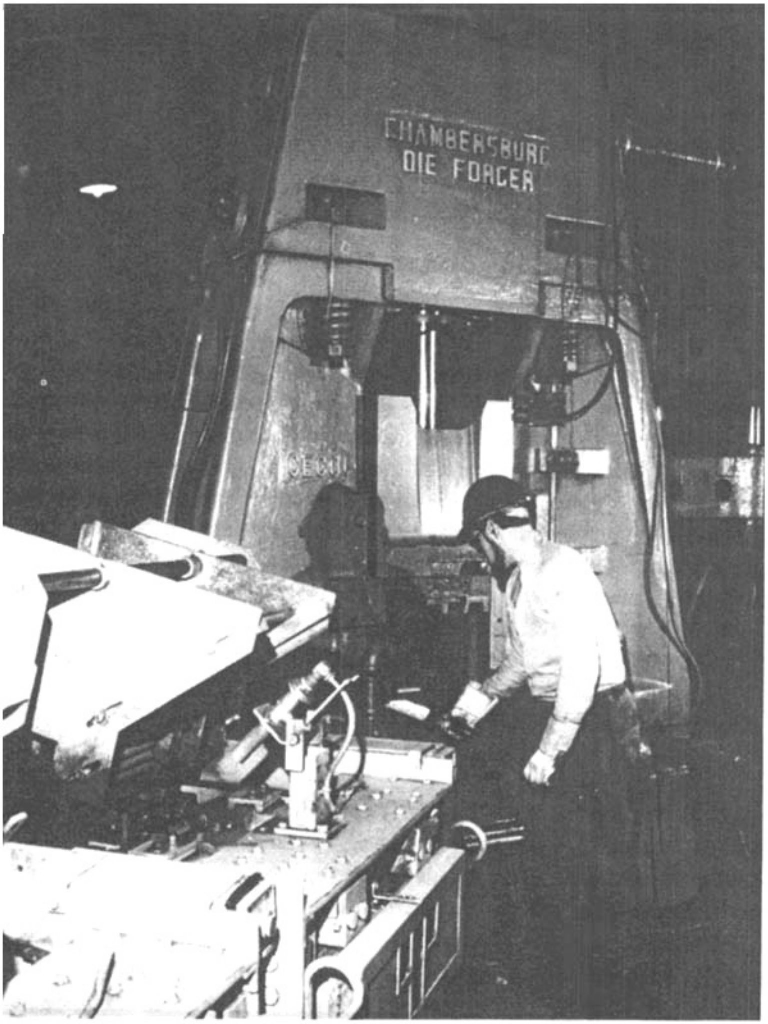

Figure 7.1 Forging hammer. Source: Courtesy of Chambersburg Engineering Co.

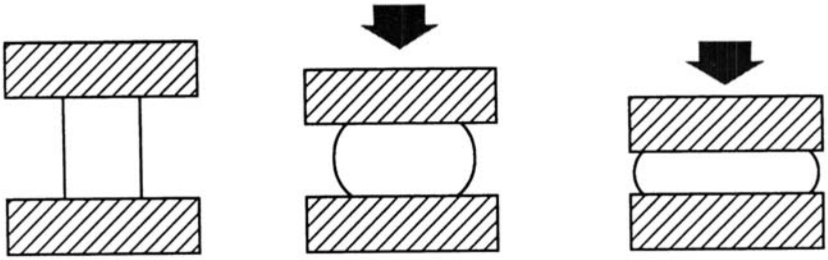

Figure 7.2 Open die forging of a disk. Source: Adapted from FIA (1985).

die blocks. If single-cavity dies are used, the part is cycled between reheat furnaces and a progression of dies mounted on a series of hammers or presses. For small parts with simple geometry, the impressions or cavities may be cut in a single die and the forging can be completed at one hammer or press with or without reheating.

Lubricants are applied by swab or spray to the die face and to the workpiece between hammer blows or press strokes. The die lubricant is designed to prevent sticking or fusing of the parts in the dies, to improve metal flow, to act as a parting agent, and to reduce wear of the die. The composition of the lubricant and its impact on workplace air quality are discussed later in this section.

A description of a typical forging operation on large parts provides a picture of the exposure of the forge shop personnel. The layout of equipment and personnel for a forging hammer operation are shown in Figure 7.5. The forging billet or pre-

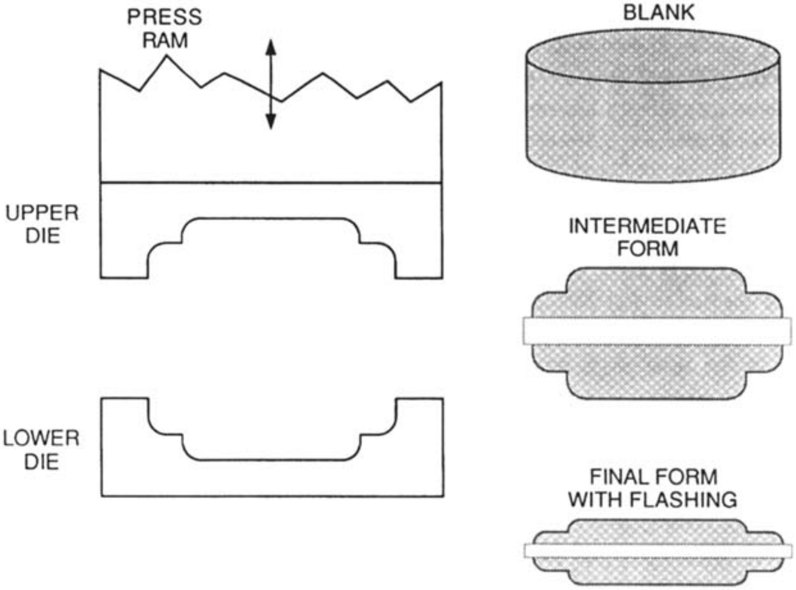

Figure 7.3 Closed-impression die forging.

TABLE 7.1 Hot-Forging Temperatures

Metal	Alloy	Temperature, °C, (°F)
Copper	EDA 122	730–840 (1350–1550)
Stainless steel	AISI 316 I	930–1260 (1700–2300)
Tool steel	T1	1070–1200 (1950–2200)
Nickel base	Hastelloy X	840–1220 (1550–2225)
Titanium	Commercial pure	840–1260 (1550–1700)

form is loaded into a gas- or oil-fired furnace by the heater and brought to a forging temperature ranging from 430°C (800°F) for aluminum to 1320°C (2400°F) for alloy steel. Box, slot, and rotary or linear continuous hearth furnaces are used to preheat the stock to these forging temperatures.

At the breakdown hammer the surfaces of both dies are blown off with compressed air, and die lubricant is applied with spray or swab by the lubricator. The heater and a helper transfer the stock from the furnace to the breakdown hammer by forklift, by crane, or manually if the piece is small. The piece is positioned on the die by the hammer operator and the lubricator. As many as 8–10 blows are struck by the forge-hammer operator. Die lubricant is applied to the top die by the lubricator as required between strikes. There is usually some overspray and mist is a significant air contaminant. When an oil-based die lubricant hits the hot workpiece and die, a portion of it burns off, generating a cloud of oil mist, sooty particulates, and a range of gases and vapors of the type noted with poor combustion of a heavy oil (Figure 7.6). If a water-based die lubricant is used, a cloud of mist is formed. On work using oil-based die lubricants, the forging equipment may be equipped with exhaust hoods of the type shown in Figure 7.7; air cleaning is frequently accomplished with high-velocity glass mat media. If local exhaust is not available, pedestal fans are positioned as shown in Figure 7.5 to blow the air contaminants away from the operators. Air contaminants not captured by the exhaust hood eventually are removed by roof exhausters.

When the rough form of the forging is achieved on the breakdown hammer, the forging is returned to the second furnace for reheat to forging temperature. After reheat the forging is transferred to the finish hammer, where the forging is completed using the same technique as on the breakdown hammer. Again, die lubricant is applied to the dies between strikes and the same air contaminant cloud described on the breakdown hammer is generated. After finish forging, the pieces are taken to the trim press where the metal flashing is removed by a trim die. The flashing is placed in a scrap box and the finishing operations are conducted as shown in Figure 7.4.

Forging press operations are similar to hammer operations. In a large press operation, the crew will consist of an operator, barman, oiler, and helper. The operator usually works at a control console some distance from the press while the others work directly at the press and have greater exposure to the air contaminants formed during the operation. The stock or preform is again heated in a furnace and

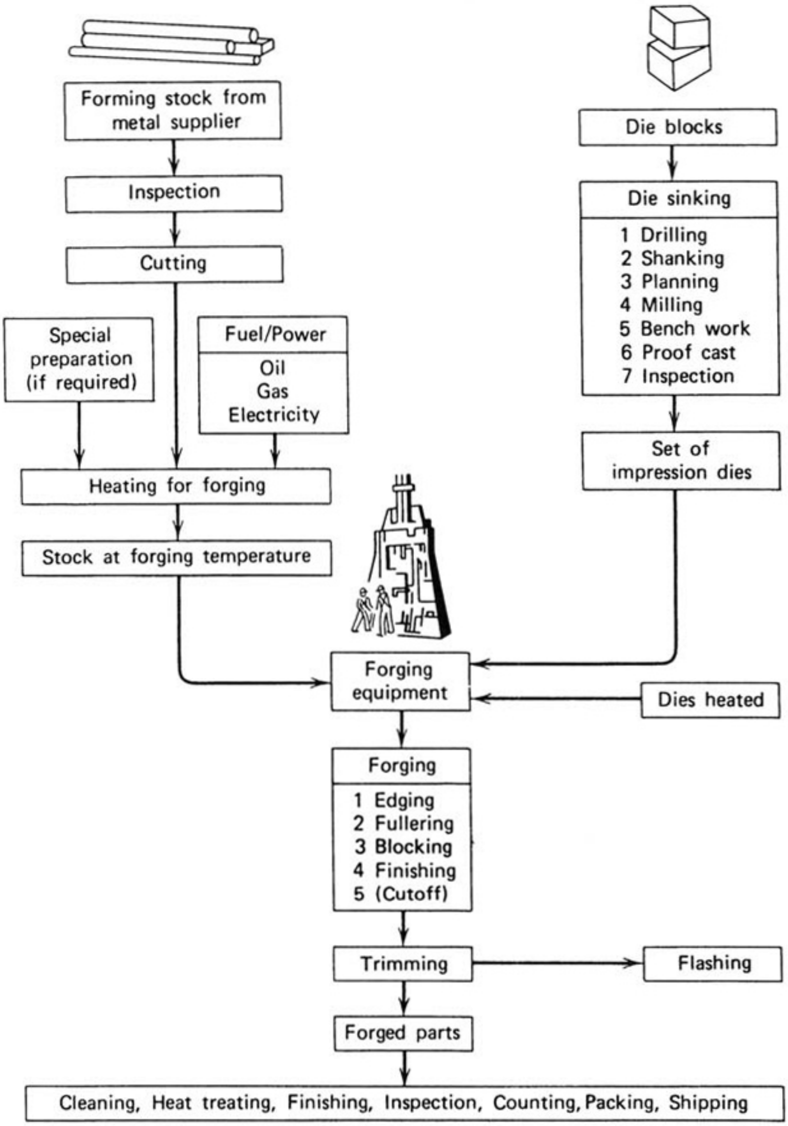

Figure 7.4 Operations associated with hot-forging operations. Source: FIA (1982) Courtesy of Forging Industry Association

then transferred to the press by a forklift. The lubricator blows off the die with compressed air and then sprays on the die lubricant. The piece is positioned on the bottom die and is forged with a single squeezing stroke. There is exposure to mist during application of the die lubricant and to the products of combustion if oil-based lubricants are employed.

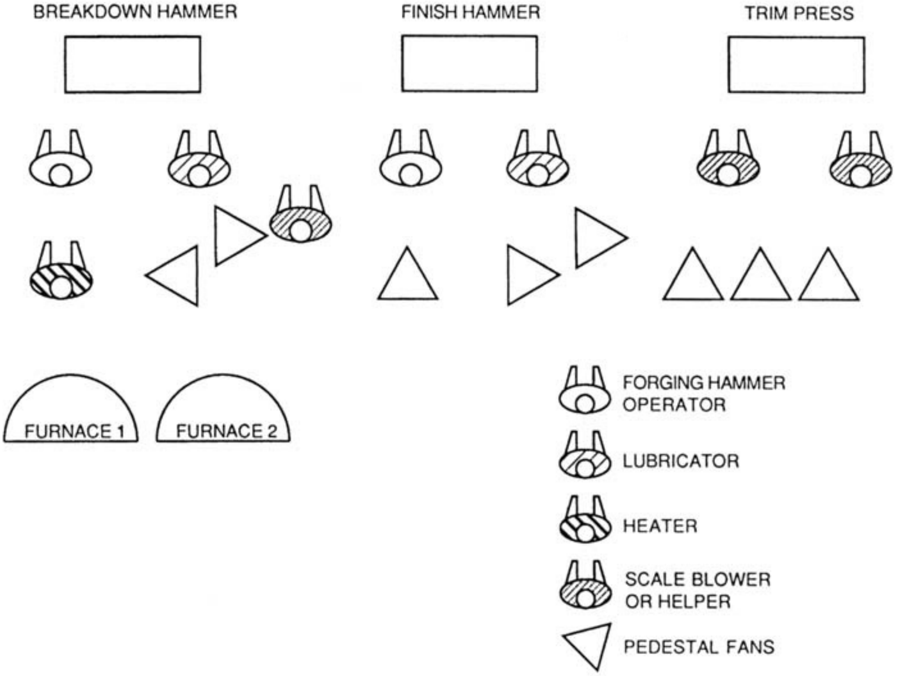

Figure 7.5 Layout of equipment and hammer operating crew. The number of personnel will vary with the size and complexity of the workpiece. Complex parts will require two hammers each with an operator and lubricator, two furnaces each with a heater, a few helpers to move the parts, and one trim press operator for a total of 9–10 persons.

7.3 AIR CONTAMINANTS

Significant air contamination may occur from furnace operation, the application of die lubricants, the forging operation itself, and the heating of the dies. The various grinding and metal-finishing operations also contribute particulate contamination, but since these operations are discussed in Chapters 3 and 4, they are not covered in this discussion.

As noted in Figure 7.5, stock heating furnaces are positioned adjacent to the forging hammer or press they service. The furnaces are heated electrically or fired with fuel oil or gas. Frequently the products of combustion are released from short stacks directly to the workplace and are removed by roof exhausters. If gas is used, contamination of the workplace with the products of combustion should be evaluated, although in a large plant with dilution ventilation it is probably not of great significance. However, the release of combustion products from oil-fired burners may present a significant air contamination problem. In addition to the conventional products of combustion, including carbon monoxide, one may have sulfur dioxide formed from fuel oils that contain from 0.5 to 3% sulfur. In most cases, the furnaces used on the forging line are air atmosphere furnaces. Controlled at-

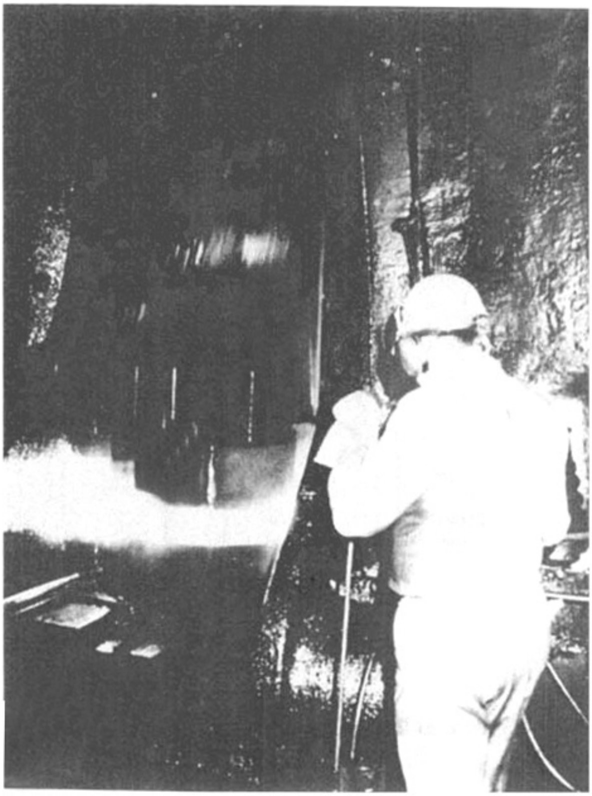

Figure 7.6 Burning off of an oil-based die lubricant applied to the die of a hammer. Source: Courtesy of Custom Alloy Corp.

mosphere furnaces used on special operations may either burn natural gas to provide a reducing or oxidizing atmosphere or use an ammonia cracking unit to provide an inert atmosphere. The potential health implications of such operations are described in Chapter 11.

To improve forging quality the forging dies may be heated up to 650°C (1200°F). This "hot-die" technique presents a second source of carbon monoxide and other products of combustion. Initially dies are brought to temperature in a die furnace and installed hot on the hammer or press. Supplemental heating with an open kerosene or gas burner flame impinging on the die may be used to keep them at temperature. This procedure contributes to the air contamination occurring at the forging operation.

In isothermal forging, the dies are heated to the temperature of the workpiece or 1000°C (2000°F) to improve quality and dimensional tolerances. Since the molybdenum alloy used in die manufacture would oxidize and degrade at this elevated temperature, the process must be carried out in an inert atmosphere. In isothermal forging the hazards associated with conventional forging are eliminated, but the haz-

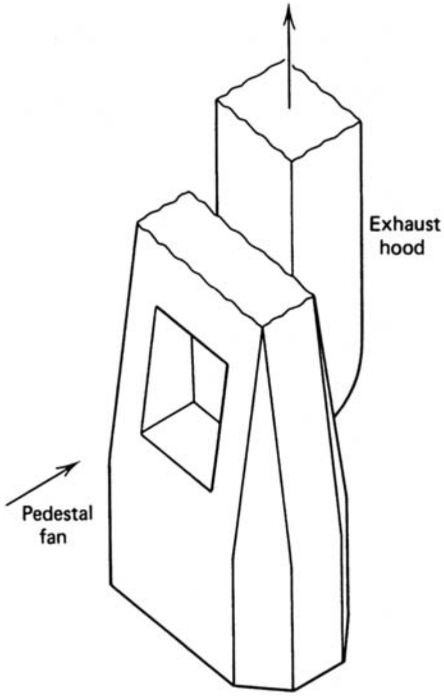

Figure 7.7 General approach to local exhaust ventilation on forging hammer. Design standards are not available.

ards associated with confined space entry are encountered during change-over and maintenance. All precautions necesary for confined spaces must be observed, including lock-out, tagout procedures. Maintenance of the forging equipment, controls, and processing chamber must be conducted by trained personnel.

The application of lubricants to dies has been a major contributor to forging shop exposures since the industry started. In cold forging the principal die lubricants are based on soaps, natural oils, fats, and molybdenum disulfide. Molybdenum disulfide, a superior die lubricant for cold forging, can be applied as dry powder, with a solvent vehicle, and in a water dispersion.

The early lubricants for hot forging consisted of natural graphite and animal fat added to an oil base. Current die lubricants are a sophisticated blend of components designed for specific forging applications. To be effective, the die lubricant must stay on the die face until forging is completed. To accomplish this a variety of additives including coke, sawdust, clay, talc, and asbestos were used in the 1940s and 1950s. Compounds of sodium, tin, aluminum, antimony, bismuth, and arsenic were also evaluated as additives by the forging industry during this period. Additives now commonly used include aluminum stearate, molybdenum disulfide, and lead napthenate. The latter material should be replaced with zinc napthenate. In straight hot-die work the billet may also be coated with a water-based graphite die lubricant. In this process the workpiece must be preheated to drive off the water vehicle. This step may be eliminated by using a high vapor pressure vehicle which will flash off at room temperature. A borax solution is also used for preform coating; it also requires preheating for effective drying.

In isothermal and hot-die forging the lubricant may be applied directly to the billet or preform by dipping, swabbing, or spraying prior to furnace heating. Since the conventional die lubricant described above would burn off in the furnace, an alternative lubricant is employed. The parts are coated with a glass frit in an alcohol vehicle by dip bath or spray application. The alcohol evaporates at room temperature, leaving a powder coating on the billet which forms a fluid viscous film at furnace temperature. This glass film acts as an effective lubricant in the forging operation.

When hot parts are forged with an oil-based die lubricant, the oil burns off, forming a heavy particulate cloud containing oil mist, sooty particulates, trace metals such as vanadium, and polynuclear aromatic hydrocarbons (Figure 7.6). Sulfur dioxide may also be formed from the combustion of the oil vehicle. In the only comprehensive forge shop study in the literature Goldsmith et al. (1976) found significant concentrations of respirable mass particulates and benzo(a)pyrene (Table 7.2). In this study, the concentrations of sulfur dioxide, aldehydes, and nitrogen dioxide were not excessive.

The problems associated with oil-based die lubricants can be eliminated by substitution of a water-based lubricant. Water-based die lubricants were introduced in the industry as early as 1950, but intensive review of water-based die lubricant was not given attention until the 1970s. The simplest water-based die lubricant consists of graphite and a surfactant in a water vehicle. More complex synthetic die lubricants include a variety of chemicals to achieve certain operational characteristics. These systems warrant not only operational review, but investigation of the thermal degradation properties of the additives. The conversion from oil- to water-based die lubricant has been slow, but now 60% of the die lubricant sales in the United States are water-based systems with the balance split between oil-based graphite (25%) and synthetic systems (15%) (Anon., 1993). The severe demands of some complex forging operations cannot be met by the simple water-based die lubricant, so the problems associated with the oil-based materials still exist.

Few data are available on the concentrations of metal dust or fumes generated from the workpiece during forging operations. The contamination generation rate

TABLE 7.2 Particulate Concentrations During Forging

Particulates	Concentration Range (mg/m^3)	No. of Samples
Total	3.2–92.1	43
Respirable mass	3.0–33.3	10
Benzene soluble	1.3–6.0	6
Airborne aromatic	0.3–0.9	6
Benzo(a)pyrene	0.002–0.003	6

Source: Goldsmith et al. (1976).

depends on forging temperature, vapor pressure of the metal at forging temperature, metal flow characteristics, and the oxidizing potential of the metal. My personal experience is that the concentration of airborne metal particulate originating from the workpiece is quite low. This is confirmed by a recent investigation (Porter, 1990). Voborsky (1978) conducted a study of airborne nickel particulates generated during hot hammer forging of steel with a nickel content of less than 3%. Since nickel oxide is formed in the presence of oxygen at temperatures above 200°C (400°F), Voborsky anticipated that nickel oxide would be present in the workplace. A series of 25 full-shift, personal air samples were taken at two forge shops from heater operators, lubricators, scale blowers, and manipulators. With the exception of three samples, all time-weighted average concentrations of nickel were less than the NIOSH REL of 15 $\mu g/m^3$. The three samples exceeding 15 $\mu g/m^3$ were taken from the manipulators who handled the hot workpiece directly in front of the hammer.

A new dimension in forging is achieved with powder forging, a highly efficient process for steel and aluminum alloys that provides improved metallurgical properties for small parts (Kulkarni, 1985). Prior to forging, the metal powder is blended with alloying components and lubricants such as zinc stearate and graphite. The mix is compressed to a dense mass by conventional powder metallurgical techniques. This preform is then sintered and either immediately hot forged or cooled for subsequent lubrication and reheating for forging. The hazards introduced by this process are associated with the handling of fine metal powders, which may present both a dust exposure and fire and explosion risk arising from their reactivity in air.

A variation of powder forging involves the manufacture of sprayed metal preforms of ferrous metals (Dreger, 1976). The alloy to be forged is melted in an induction furnace or plasma arc and flows through a nozzle where it is atomized by nitrogen jets. The molten particles are deposited in a preform mold and weld to one another to provide a shaped preform of high quality for hot forging. If the plasma technique is used, the entire process must be conducted in a chamber under vacuum. The maintenance of such a facility presents the usual confined space hazards.

In the past, asbestos was used to cover large workpieces during forging to reduce heat loss, but now fiberglass blankets are used. During forging, the cloth or blanket is shredded and fibers may become airborne. When the finished part is cleaned by abrasive blasting, the fibers adhering to the metal will become airborne. Another approach to prevent rapid cooling is to spray coat the forging preform with a powder of sodium silicate, alumina, clays, and glass frit suspended in an alcohol vehicle. Firing the preform in a furnace converts the powder to an insulating ceramic coating on the preform.

The machining of die blocks may be conducted as a part of the forge operation or done by an outside supplier. The operations involved in "cutting" or "sinking" the die cavity are listed in Figure 7.4. In most cases the metal stock is a steel alloy that may contain chromium and molybdenum. Since most of the work is milling using coolants, it does not represent a significant source of air contamination. Specific comments on metal machining operations are presented in Chapter 9.

7.4 HEAT STRESS

In high-production forge shops, heat stress is a major health problem. The principal heat load is due to radiation from furnaces, dies, and the workpiece, metabolic load during manual material handling, and convective load from combustion products of oil-based die lubricants. In hot weather the convective heat load may be significant. A survey must be conducted to determine the origin of the heat load to the worker so that controls may be installed. Controls may include reduction of the physical work load by improved materials handling, shielding of furnaces to reduce the radiation load, and spot cooling of the worker. Impressive reduction in heat stress can be accomplished if reflective shields are installed on the stock heating furnaces, although one must face the challenge of keeping these shields clean to maintain maximum effectiveness. The opening height of furnace doors or slots must be kept at a minimum to reduce exposure of the heater to direct furnace radiation. Lightweight movable plates or heat shields in front of the furnace loading door may also be effective if used efficiently by the heater. The industry frequently uses steam or air jets mounted at the bottom of the door that release steam or air when the door opens. A study of the effectiveness of steam curtains on gas-fired stock heating furnaces operating at 1090°C (2000°F) and 1260°C (2300°F) showed that during the 5-min door-open time the radiation load was reduced significantly; this was reflected in a reduction in heat stress for that period as measured by several indices (Porter, and Goldman 1990). Most importantly, the steam curtains extended the maximum tolerance time the operator could stand at the loading–unloading station without severe discomfort by 20%. The impact of the steam curtains on the full-shift Wet Bulb–Globe Temperature Index was less impressive, with a reduction of less than 5%.

7.5 NOISE

Forging was one of the first industrial operations to be identified as causing noise-induced hearing loss. This hazard is due to hammer impact noise (e.g., a 3–4 ton ram dropping on a 20-ton anvil), hammer and press component noise, and, to a lesser degree, "pink" noise from the operation of steam and air cylinders and pneumatic solenoids on both hammers and presses. In a study of hearing loss from impact noise in seven United Kingdom forge shops, the average A-weighted Leq values for hammer operators was 108 dB and 99 dB for press operators (Taylor et al., 1984). A companion audiometric study of 716 operators demonstrated severe hearing losses in both hammer and press operators. In the population exposed for less than 10 years, the loss was less than predicted for comparable continuous noise; however, for exposures of 10 years or longer, the loss was greater than predicted.

Effective measures for noise control include redesign of the workpiece to eliminate short dwell times and therefore permit conversion from hammer to press equipment, installation of damped clutch and brake systems on crank-driven hammers, enclosure of the clutch and brake, and total enclosure of the hammer or press (Doege and Wischman, 1985). The air-release noise can be controlled by redesign of blow-off nozzles or the installation of mufflers. The forge shop noise problem normally is controlled by ear protection and a complete hearing conservation program.

7.6 EYE HAZARDS

The periodic viewing of the hot workpiece and the furnace interior presents a possible infrared radiation exposure that has not been fully evaluated. Heat cataracts may develop depending on radiation intensity, time exposed, and age of the worker. The information contained in Chapter 33 on glass production also applies to the forging industry.

7.7 CONTROL

A combination of local and dilution exhaust ventilation is used in most large forge shops to control air contaminants. The small job shop usually operates without local exhaust ventilation control on the hammers and presses. Dilution exhaust ventilation is reasonably effective for carbon monoxide control from fugitive sources, but it does not control the smoke cloud from forging operations. Hot-forging hammers and presses utilizing oil-based die lubricants should be equipped with local exhaust ventilation. To date there are no design criteria published on such local exhaust ventilation, although anecdotal information indicates that a velocity of 350 fpm across the hammer or press opening provides reasonable control. Air contaminants arising from stock heating furnaces may be eliminated if the stock can be heated by electrical resistance or induction heating methods.

Protective clothing requirements vary greatly with the type of forging. One should at least consider head protection and the mandatory use of protective goggles and shoes. On certain operations gauntlet gloves and shoulder-length fireproof sleeves are necessary. If there is heavy use of oil-based die lubricants, suitable oil- and fireproof aprons and leggings should be worn by the forging crew. For the heaters, goggles with colored lenses and a wire mesh face screen for infrared protection may be in order. Employees exposed to excessive noise levels should use hearing protection.

A range of important safety issues that exist in forge shops are covered elsewhere (ANSI, 1985 and NSC, 1991).

REFERENCES

Anon. (1993)., "Forging Databook," *Forging*, 24–28.

ANSI (1985), *Safety Requirements for Forging Machinery*, ANSI B24.1-1989, American National Standards Institute, New York.

Doege, E. and Wischmann, G. (1985), *Noise Control Eng. J.*, April, 44–48.

Dreger, D.R. (1976), *Machine Design*, Aug.12, 86–88.

FIA (1982), *Forging Capability Chart*, Forging Industry Association, Cleveland, OH.

FIA (1985), *Forging Handbook*, Forging Industry Association, Cleveland, OH.

Goldsmith, A. H., Vorpahl, K. W., French, K. A., Jordan, P. T., and Jurinski, N. B. (1976), *Am. Ind. Hyg. Assoc. J.*, **37**, 217–226.

Kulkarni, K.M. (1985), *Machine Design*, June 20, 1985.

NSC (1991), *Forging Safety Manual*, National Safety Council, Chicago, IL.

Porter, C. and Goldman, R. F. (1990), "The Effectiveness of Furnace Steam Curtains in Reducing Radiant Heat Exposure," presented at the 1990 American Industrial Health Conference and Exposition, Orlando, FL.

Porter, C. (1990), personal communication.

Voborsky, R. C. (1978), "Occupational Exposure to Nickel in the Metal Forging Processes," presented at the 1978 American Industrial Health Conference and Exposition, Los Angeles, CA.

Taylor, W., Lembert, B., Pelmear, P., Hemstock, I., and Kershaw, J. (1984), *J. Acoust. Soc. Am.*, **76**, 82.

CHAPTER 8

Foundry Operations

8.1 INTRODUCTION

Metal founding or casting is the pouring of molten metal into a cavity formed in a mold made of a suitable refractory sand and a binder. A refractory core may be placed in the mold cavity to define a void space in the casting. After the metal cools and freezes, the mold is taken to a shakeout facility, where the molding media is removed from around the metal casting. The casting is cleaned, extraneous cast metal is removed, and the molding sand is conditioned for reuse.

The realignment of American industry during the last two decades had an adverse effect on foundries in the United States, with approximately 100 foundries closing each year during that period. However, the industry continues to remain a major employer, with a broad range of occupational health problems. In 1991 there were 2650 operating foundries with the total work population of 210,000 split 60% in ferrous and 40% in nonferrous foundries. Approximately three-quarters of the facilities were job shops with the balance captive plants. Earlier employment data by foundry type (Table 8.1) indicates that most of the foundries employed less than 100 workers.

8.2 OCCUPATIONAL HEALTH ISSUES

The potential health hazards in foundries are myriad, including exposure to mineral dusts, metal fumes, products of combustion and pyrolysis, and chemicals associated with resin bonding systems. Physical hazards include noise, vibration, and heat stress. A survey of 281 foundries in Michigan in 1969 revealed that more than 7% of the employees were exposed to serious health hazards (Anon., 1968). It is reasonable to presume that conditions are at least that serious 26 years later.

Foundry sands with crystalline quartz content of 5% to nearly 100% present the major dust hazard. The sands that have clay associated with the quarry deposit, identified as naturally bonded sands, were commonly used for molding in the early 1900s, but have little use in the modern foundry. Foundry sands are now synthetic, not in the chemical sense, but rather that they are mixtures of various sands, clay binders such as bentonite, and other additives. Foundries mix their own sand or purchase it premixed and delivered in bulk by truck or rail. The critical component of the refractory sand is crystalline quartz, a material of known toxicity. The dust exposure in the foundry is complicated by the phase transformation under high pouring temperature of the crystalline quartz in the sand to two highly toxic forms of quartz—crystoblite and tridymite (see Appendix E for information on the forms of silica).

Although there is general agreement that silica dust exposures in foundries contribute to silicosis, the prevalence of the disease in foundrymen is unknown. Oudiz et al. (1983) cite a 1940s examination of foundries in Illinois as the only industry-wide study in the past 40 years. In this study, the prevalence of silicosis in workers exposed for 20 years or longer was 25.8% (USPHS, 1950). In a review of 10,362 cases of silicosis reported in 22 states, Trasko (1956) found that more in-

TABLE 8.1 Employment Distribution in United States Foundries

Foundry Type	Number	Total Employment	Average Employment
Gray iron	898	122,700	137
Malleable iron	80	181,100	226
Steel	305	48,500	159
Aluminum	875	49,600	52
Copper alloys	411	14,000	34
Other nonferrous	328	19,000	58

Source: Adapted from NIOSH (1985).

stances of the disease were attributable to foundries than to any other manufacturing group. A study by NIOSH investigators in the 1980s shows that the problem continues to exist. In a gray iron foundry, 8 of 10 workers employed for 20 years or more had radiographic evidence of silicosis and 2 of 84 who worked less than 20 years were found to have silicosis (Landrigan et al., 1986). A series of studies conducted in the 1970s and 1980s (Table 8.2) demonstrated that 30–50% of the air samples for silica in United States foundries exceeded the OSHA permissible exposure limit.

Over the past 50 years a series of epidemiologic studies in North America, Scandanavia, and the United Kingdom have indicated an increased risk of lung cancer in foundry workers. After a comprehensive review, IARC concluded that "Taken together the available evidence indicates that occupational exposures occur in iron and steel founding which are probably cacinogenic to humans "(IARC, 1984). More recently, a number of epidemiologic studies have confirmed this increased lung cancer risk. It is widely assumed that the risk is associated with exposure to polycyclic aromatic hydrocarbons formed from the pyrolysis of organic materials in green sand molds during pouring and cooling. The results of a comprehensive review of polycyclic aromatic hydrocarbon concentrations in 10 ferrous and nonferrous foundries in Canada is presented in Verma et al. (1982). A study by Knecht et al. (1986) characterizes the complex mixture of 20 polycyclic aromatic hydrocarbons associated with shakeout operations in an iron foundry.

A controversial issue is the possible association of silica exposure and bronchogenic cancer in foundry workers. Although a number of major scientific meetings have addressed this issue in the past decade, the question prompts continuing debate in the scientific community. However, in an action that resulted in regulatory action by a number of agencies, IARC identified silica as a probable carcinogen (IARC, 1984). The health effects from exposure to a broad range of ferrous and nonferrous metal fumes and dusts is well understood. It is frequently difficult, however, to identify the metals of concern in a complex foundry environment. The gray iron foundry can be operated with both pig iron and scrap. Scrap is frequently contaminated with lead, cadmium, and zinc. Relatively low concen-

TABLE 8.2 Air Concentrations of Silica in Foundries

Period	Source	Foundries	Samples	Percentage above PEL
1976	Wisconsin OSHA (1)	65	1187	41.6
1977	Michigan OSHA (2)	28	630	53.5
1978	OSHA (3)	282	—	31.0
1981	PA (4)	20	62	44.0
1983	Oudiz (5)	205	1743	40.6

Sources: (1) Zimmerman and Barry (1976); (2) Mirer (1977); (3) Bolt, Beranek, and Newman (1978); (4) Pennsylvania Foundrymen Association (1981); (5) Oudiz et al. (1983).

trations of these metals in the charge can cause significant air concentrations of their fumes owing to their high vapor pressure at the melting point of iron. In steel alloy foundries the air concentrations of chromium, nickel, manganese, and a range of other alloying metals must be considered in addition to fumes from the various innoculants (see Appendix A for the composition of common alloys). In nonferrous foundries, common brasses and bronzes present potential exposures to lead, zinc, and antimony. The workers in foundry finishing rooms are exposed to metal fumes from cutting, welding, and burning and respirable particles from mechanical operations such as grinding.

Carbon monoxide is the most dangerous of all gaseous contaminants in the foundry and each year a number of metallurgical workers die from acute exposures. Carbon monoxide is formed from furnace combustion processes such as the cupola and the pyrolysis of organic mold components.

The following sections cover the major processes utilized in a variety of foundry operations and the related occupational health hazards. The discussion focuses on the casting of iron and steel; however, specific problems associated with aluminum, magnesium, brass, and bronze foundries are also identified. Limited attention is given cleaning and finishing operations since they are covered in Chapters 3 and 6.

8.3 PATTERNMAKING

In the first part of this century the health hazards of patternmaking were identical to those of a woodworking shop since the patterns were made of wood and required simple finishing techniques. With the advent of semiautomatic and automatic molding machines, the patterns for high production molding machines were fabicated in metal. Over the past 20 years reinforced polyester, epoxy, and urethane plastics were introduced in the manufacture of permanent patterns. Expendable patterns used in the lost wax and foam systems are discussed in Sections 8.4.3 and 8.4.4.

The health hazards associated with woodworking and metal machining are discussed in other chapters. Exposure to wood dust has been associated with nasal cancer in patternmakers. The principal health issues associated with reinforced plastic resins and adhesives are the dermal problems from epoxy finishes and adhesives and respiratory sensitization from catalysts used in urethane systems.

8.4 MOLDING

The making of a mold for metal casting requires two specific materials, each serving a specific need (Figure 8.1). The primary material in the foundry, the molding media, must maintain the complex mold geometry when molten metal flows into the cavity. Since the sixteenth century, silica sand has been the media of choice for single-use molds. By the early 1900s, the bulk of molding sands were synthetic, that is, they were a blend of silica sand, clay, and other additives used to

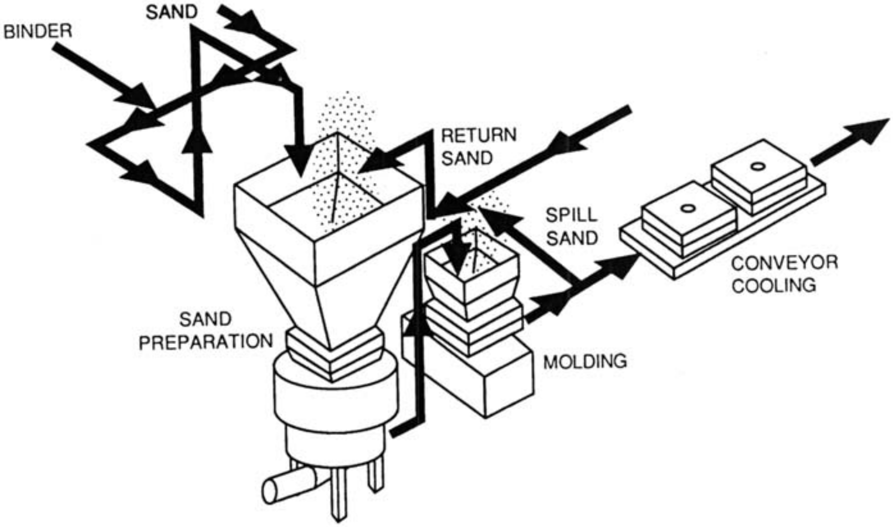

Figure 8.1 Schematic of molding.

bond the individual sand grains, form a plastic media, and provide other desirable features.

Over the decades this simple sand–clay molding media, called green sand in the industry, was modified to improve its performance. Molding sand is now a mix of silica sand with bentonite or kaolin clay (fire clay) as a binder, cereal or wood flours to improve collapsibility, and water or oil. Finely ground soft coal (sea coal) is also added to the molding sand to improve casting quality. When the metal is poured, the sea coal pyrolyzes, forming gases that reduce metal penetration into the sand and thereby improve the metal surface. Starting in the 1950s, a number of new core bonding systems were applied to mold manufacture, which were still based on silica, but used chemical resins to bond the individual grains of sand together.

The second essential material in the foundry, the core media, was originally based on a coarse silica sand bonded with linseed oil. This core system required that the individual cores be baked in an oven to achieve the necessary strength to maintain position and geometry in the mold cavity under the stress of molten metal flow. Core oils have been replaced with synthetic resins systems based on phenol or urea-formaldehyde and furfuryl alcohol (AFS, 1993).

In the 1980s, one-half the sand molds in US foundries were made with the green sand process. Of the balance, the distribution was 10% by carbon dioxide molding, 8% by shell molding, and less than 10% by no-bake and hot- and cold-box systems. However, the no-bake molding procedures are gradually replacing the green sand process.

Earlier we stated that silica sand was widely used in foundries since it was an inexpensive refractory that could be formed into the required mold geometry using various bonding systems. Silica sand has one major disadvantage—it causes silicosis. For this reason, in some foundries silica sands have been replaced with olivine, zircon, and chromite sands, which have a low order of toxicity. This positive movement began in Scandanavia, progressed to Europe and is practiced in the United States to a limited degree. Where this substitution has been made, the airborne concentrations of silica have been reduced dramatically and silicosis eliminated. Although the conversion from silica sands to nonsilica olivine and zircon sands will reduce the exposure to quartz, one must realize that over a period of time these sands will become contaminated with quartz from silica-based cores (Davis, 1994). The application of olivine and zircon sands in steel foundries may be limited to parts with thin cross sections because of premature freezing of the metal caused by the high rate of heat transfer of these refractory materials (Cleary, 1994).

Molding sand is prepared by mixing sand with the other ingredients in a muller (Figure 8.2). This operation is dusty and the muller must be provided with local exhaust ventilation. After mixing, the sand is placed in storage bins or silos and when required it is mechanically transferred to delivery bins at the molding positions (Figure 8.3). At this point, the sand is a moist cohesive mass and represents a minimal dust hazard. United Kingdom investigators have shown that airborne dust can be kept to a minimum if the moisture content is kept above 25% (Shaw, 1977). The potential hazard from the molding sand increases as it is processed through the foundry. After the casting operation, the friable, dusty sand presents a major dust hazard.

8.4.1 Green Sand Molding

The steps involved in the manual construction of a simple green sand mold are shown in Figure 8.4. The pattern or image of the metal part to be cast is made from wood or metal as described earlier. The half sections of the pattern are made with

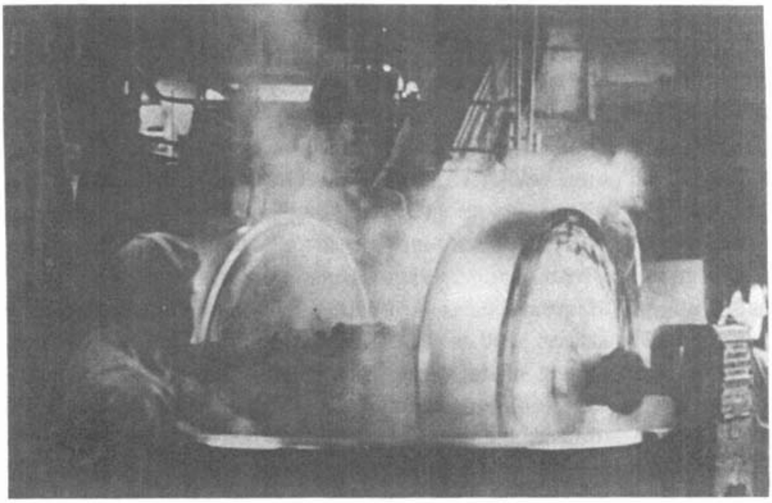

Figure 8.2 A muller for mixing mold and core sands. This unit is normally provided with an enclosing hood for dust control.

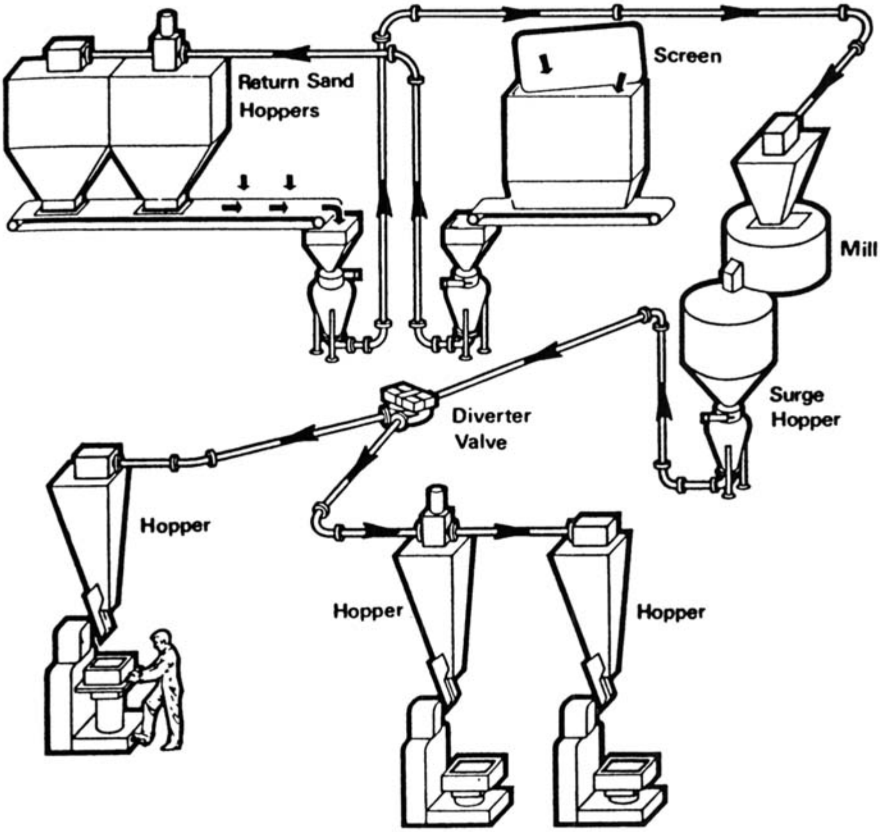

Figure 8.3 Sand distribution system. Source: Shaw (1977).

a draft or taper so that they can be withdrawn after the sand has been compacted. In the manual bench-molding operation, a metal or wooden frame called a flask is used to hold the mold. The top half of the flask is called the cope and the bottom is the drag. If additional height is needed, an extra section known as the cheek is mounted between the cope and the drag. The drag is inverted and placed on a molding board; the pattern is positioned on the board inside the flask. A fine, clean-facing sand is then screened (riddled) over the pattern and board. Next, heavy backing sand is compacted around the pattern with a pneumatic tamper to form a dense, compact mass. The excess sand is struck off the mold and the drag is inverted.

The cope is completed in the same fashion as the drag. The cope half of the pattern is placed on the molding board and wooden spacers or forms are positioned to form the sprue and riser, channels. The sprue and the associated gating form the pathway so the molten metal can flow to the cavity. After the cavity is filled, the excess metal flows to the riser, which provides a reservoir of molten metal to handle shrinkage when the metal casting cools. Gas vent holes are added to the mold. The cope and drag are flipped faceup so that the patterns, sprue, riser, and runner

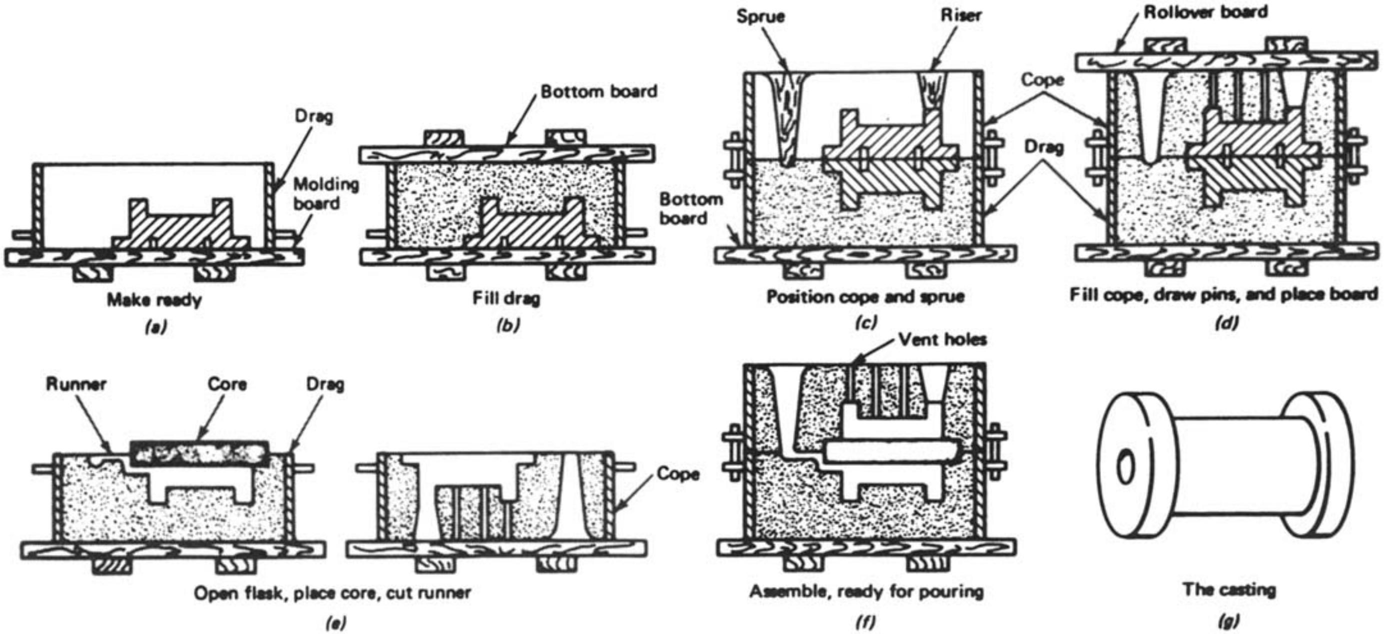

Make ready
(a)

Fill drag
(b)

Position cope and sprue
(c)

Fill cope, draw pins, and place board
(d)

Open flask, place core, cut runner
(e)

Assemble, ready for pouring
(f)

The casting
(g)

Note: Pattern draft is not shown, to simplify the drawings

Figure 8.4 Manual molding of a hollow, right cylinder form for a pulley. Source: *Manufacturing Processes* by A. Roberts and S. LaPidge. Copyright 1977. Reproduced with permission of McGraw-Hill Book Co.

forms can be removed. If there are to be channels or voids in the casting, sand cores must be positioned in the mold. The making of the sand cores is described later; however, these are refractory parts to be positioned in core prints (holding positions) in the mold. With the casting cavity defined, the cope and drag are reassembled and clamped together ready for pouring, as shown in Figure 8.4. Vacuum forming of sand molds is a popular method of molding in high production gray iron foundries. In this system the cope and drag are made in the conventional way but the density and strength of the low-binder molding media is achieved by a vacuum forming technique. The low binder content of the molding sand makes disposal of waste much easier (Cleary, 1994).

As indicated earlier, at this point in the process, the moist molding sand is not dusty and does not normally require local exhaust ventilation. However, the very fine parting material does present a dust exposure. The most hazardous parting compound is silica flour, which in its simplest application is dusted on the mold with a small bag. Although used widely at one time, silica flour has for the most part been replaced by nonsilica materials and is banned in the United Kingdom. The common parting compounds are shown in Table 8.3. If the materials are applied by spray, the compounds may be suspensions in water, aliphatic hydrocarbons, 1,1,1-trichloroethane, or a Freon R solvent. The latter two materials are now being phased out as a result of the CFC regulatory action discussed in Chapter 5. If spray application of the suspensions is required, either airless or electrostatic spray techniques should be used to minimize overspray and rebound.

In a high-production shop the green sand mold described above would be made on a molding machine. This equipment is designed to pack the sand firmly in the flasks and manipulate the flasks, pattern, and completed molds semiautomatically, thereby minimizing the physical labor of the molder and improving mold quality (Figure 8.5). The sand is delivered from an overhead hopper to the molding machine table. The table jolts the sand to compact it in the flask; it is then squeezed to pack it around the pattern in a reproducible manner. If the work is too large for machine molding, it is done in large floor molds using flasks that are handled by crane. These flasks are filled with molding sand using a mobile sand slinger, which is a single-blade centrifugal blower located at the end of a boom and supplied with molding sand from a hopper (Figure 8.6). The operator can remotely direct the

TABLE 8.3 Foundry Parting Compounds

Dry Release Agents	Wet Release Agents
Graphite	Dry release agents in suspension
Mica	Bentonite suspension
Metal stearates	Mineral oil
Molybdenum disulfide	Fatty acids (oleic acid)
Polyethylene	Silicones
Polyvinyl alcohol	Soya lecithin
Silica flour	
Stearic acid	
Talc	

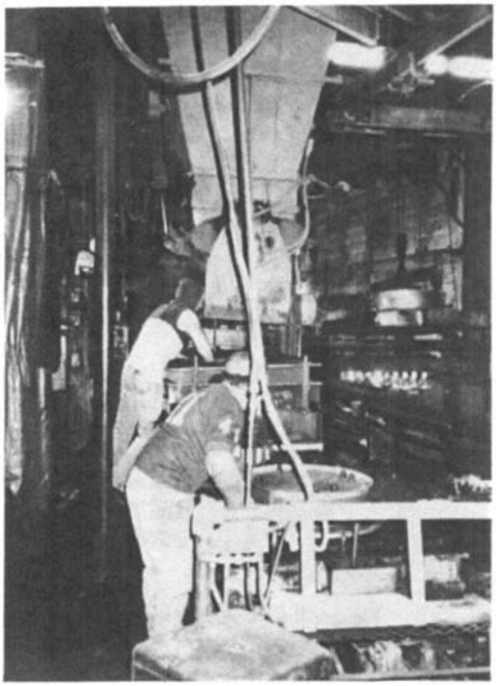

Figure 8.5 A high-production molding line.

high velocity sand stream to various parts of the flask and produce a compact mold. If the cast part is too large for available flasks, a pit is dug in the foundry floor and the molding and pouring is conducted in place. The machine-molding techniques described above all represent noise and vibration problems in the foundry.

In addition to the conventional green sand molding process there are a number of specialty molding processes, used principally in steel and nonferrous foundries, and based on one of the resin bonding systems originally designed for core manufacture and shown in Table 8.4.

8.4.2 Shell Molding

The shell-molding process uses a resin-bonded sand for high production of molds for small parts. The sand is coated with phenol- or urea-formaldehyde resin using a cold-, warm-, or hot-coating technique. In the cold technique the resin, hexamethylene tetramine, and calcium stearate are blended with dry sand in a mixer. In the warm-coating process the resin–sand mix is dried with a 150–180°C (300–350°F) air stream. Flaked resin is blended with the sand in the hot-coating technique, quenched with a slurry of hexamethylene tetramine and calcium stearate, and then aerated at ambient temperature. It is common practice for foundries to purchase precoated shell sand, thereby eliminating this mixing process and the associated worker exposures.

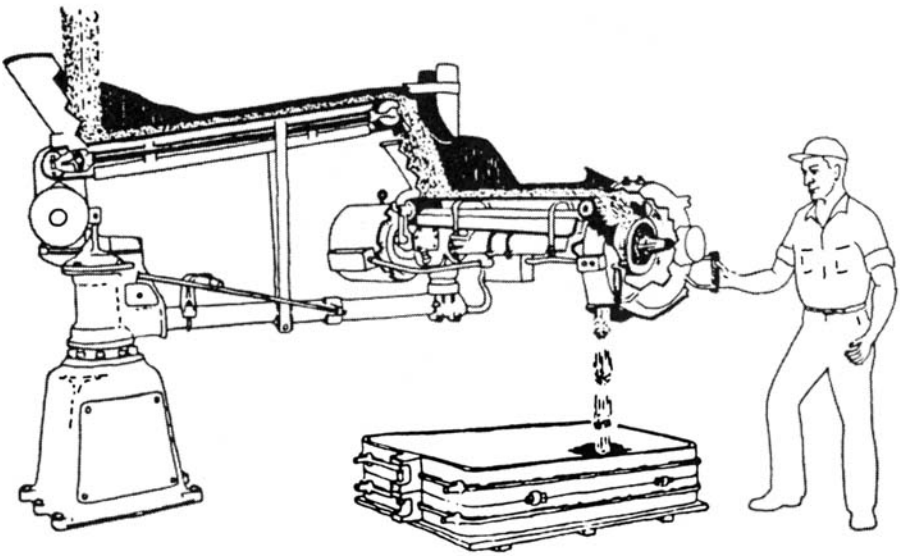

Figure 8.6 A sand slinger.

In a manual, dump-box shell-molding technique, a machined metal pattern reflects the geometry of the part to be cast (Figure 8.7). The pattern mounted on the resin-sand dump box is sprayed with a parting agent such as a silicone. The pattern is heated by the oven, and the dump box is inverted. The resin hits the hot pattern and a skin of partially cured resin-sand is formed over the pattern. The dump box is turned upright and the oven is positioned over the pattern to effect a complete cure at temperatures of 316–427°C (600–800°F). The cured shell is stripped from the pattern and assembled with a matching shell to form the mold. The cope and drag are either glued or clamped together or, if small, they are supported by sand or steel shot in a flask for casting.

In the high-production technique, the shell-molding sand is blown into a heated die where the resin bond is formed. After the cured shell is stripped from the pattern or die, it is assembled with a matching shell to form the mold. The cope and drag are either glued or clamped together, and frequently they are supported by sand or steel shot in a can or flask for casting. The layout of the work stations for a shell-molding machine is shown in Figure 8.8. The operator removes the completed cope from the machine and places it on the rack. The matching part of the shell mold (drag) is placed on the glue applicator and the cope and drag are assembled on the mold press. The completed mold is then placed on a storage rack, and the process is repeated.

The operator of a shell-molding machine is exposed to phenol, formaldehyde, ammonia, hexamethylene tetramine, and carbon monoxide. In a study of a well-exhausted shell-molding machine, carbon monoxide concentrations ranged from 15 to 20 ppm, ammonia from 3 to 10 ppm, phenol and formaldehyde were not de-

TABLE 8.4 Organic Binders for Mold and Core Sands

- Oils
  - Core oils
  - Oil–oxygen no-bake
- Hot box
  - Urea-formaldehyde
  - Phenol-formaldehyde (Shell)
  - Furan
  - Modified furan
    - Urea-formaldehyde–furfuryl alcohol
    - Phenol-formaldehyde–furfuryl alcohol
    - Phenol-formaldehyde–urea-alcohol
- Urethane no-bake
  - Alkyd isocyanate
  - Phenolic isocyanate
  - Polyester urethane
- Acid no-bake
  - Furan with
    - Phosphoric acid
    - Toluenesulfonic acid
    - Benzenesulfonic acid
  - Phenol-formaldehyde

Source: Adapted from IARC (1984).

tected, and total respirable dust concentrations ranged from 0.82 to 1.4 mg/m^3 with the maximum quartz content of 4.7% (NIOSH, 1979).

Local exhaust ventilation is required on shell molding machines at the cope hanger, mold press, and storage rack. A fresh air supply diffuser may be required to control heat stress in this operation. There is a potential fire and explosion risk from the alcohol in the resin systems.

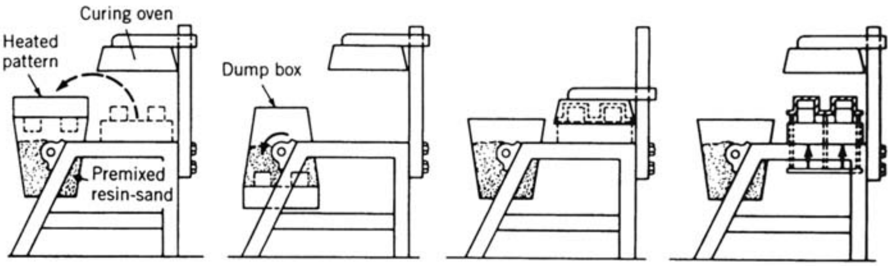

1. Invert pattern onto sand tank.
2. Invert sand tank so heated pattern is covered with resin.
3. Resin-coated pattern is returned. Oven is positioned over the shell.
4. The shell is stripped from the pattern.

Figure 8.7 Shell molding by the dump-box method. Source: *Manufacturing Processes* by A. Roberts and S. Lapidge. Copyright 1977. Reproduced with permission of McGraw-Hill Book Co.

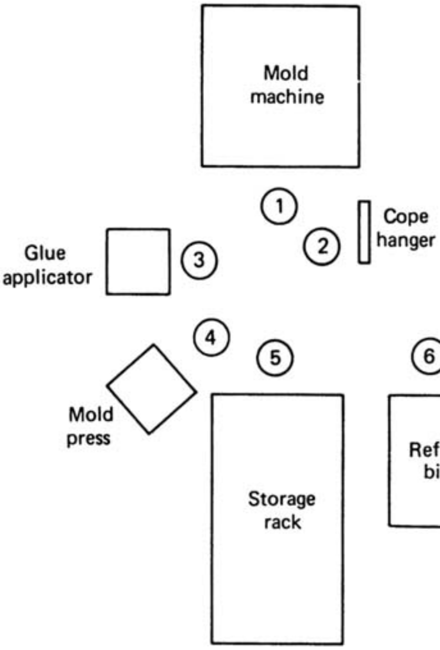

Figure 8.8 Worker layout and assignments on a shell-molding operation.

8.4.3 Investment Casting or Lost Wax

The lost wax or investment casting method is an ancient technique that is now used industrially for precision casting of a range of products including turbine vanes and nozzles (Figure 8.9). Injection molding dies are fabricated to form expendable wax patterns in the image of the metal part. The patterns are then molded from paraffinic and microcrystalline waxes with additives which include resins, stabilizers, dyes, and odorants. The patterns are ejected from the mold, cooled, and assembled with an electrically heated spatula in a cluster or tree with a common sprue and pouring cup so that a large number of parts can be obtained from one casting. The completed cluster is dipped in a cold solvent etch bath for cleaning and while wet it is coated with a fine ceramic slurry. Multiple coats of a refractory stucco are then applied with a fluidized sand bed or a rainfall sand process. After a structural stucco coating is achieved, the stucco tree is inverted and placed in a steam autoclave to melt and drain the wax from the assembly. The resulting shell mold is fired in an oven to remove residual wax. The flasks are thermally conditioned at a higher temperature and the molten metal is poured into the cavity. The casting is cooled, the parts are retrieved from the flask by a vibrating tool or high-pressure water jets, and final cleaning is done with a variety of techniques, as described in Chapter 6.

The hazards of investment casting vary depending on the exact materials in use. The preparation of the silica slurry and the stucco coat involves an exposure to silica sand. Low-temperature melting of the wax should not present a health risk, but

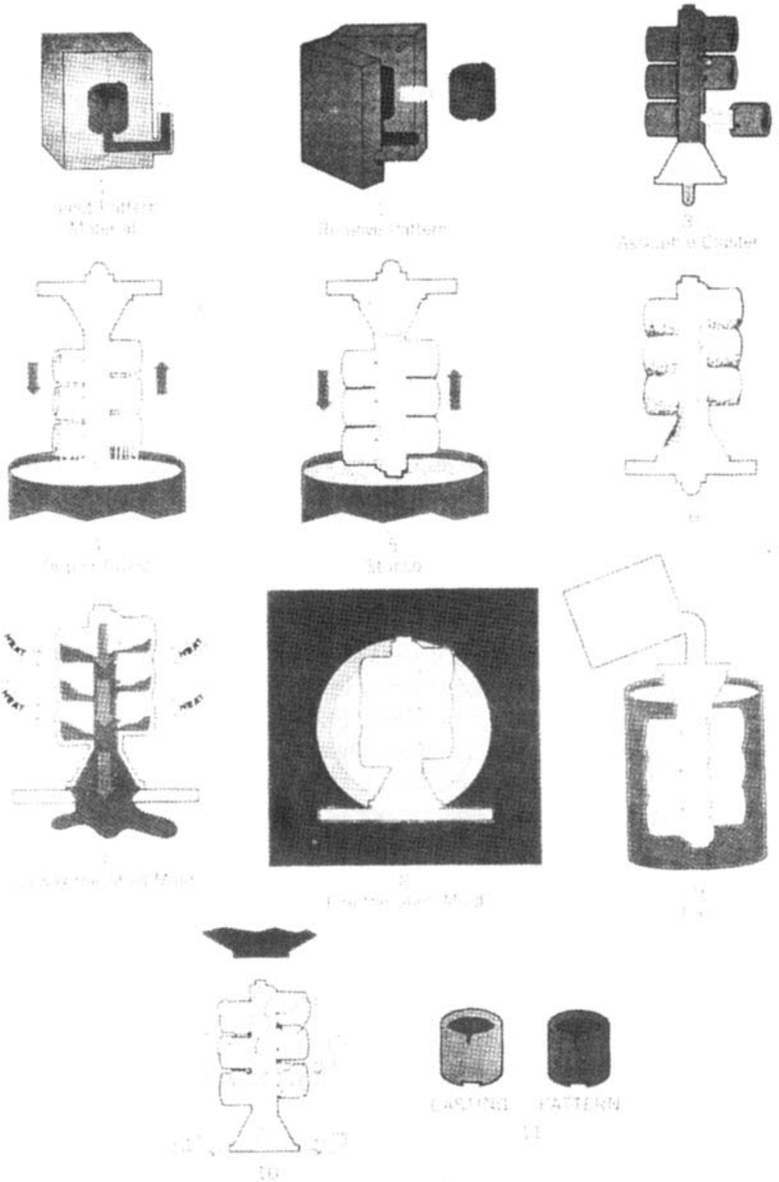

Figure 8.9 Investment casting. Source: Reproduced with permission of Investment Casting Institute, Dallas, TX.

may require local exhaust ventilation to eliminate a nuisance odor problem. Removing the parts from the investment may involve an abrasive blasting operation with possible dust exposure. The binder in investment casting systems for steel casings is usually ethyl silicate. Under high temperature this material transforms to free silica, which may present a significant exposure to finishing room workers even though nonsilica sands are used in the molding media (Cleary, 1994).

8.4.4 Evaporative Pattern Casting (EPC, Lost Foam, Full Mold)

In the evaporative pattern casting process, an expendable pattern in the image of the part to be cast is made of polystyrene foam (Figure 8.10). In most cases, the pattern can be constructed so that cores are not required. The patterns are formed in an aluminum die using polystyrene beads and a pentane blowing agent. The pattern is coated with a silica refractory wash, and positioned in a molding box with the necessary pouring cup, sprues, and risers also made of polystyrene, and supporting sand is placed around the pattern and gently rammed in place. When the molten metal is poured, the polystyrene evaporates and the gases diffuse into the sand mass. The entire polystyrene pattern evaporates and the molten metal fills the space occupied by the pattern. An advantage of this process is the minimum cleaning required of the cast part.

NIOSH reviewed a study by Kobzar and Ivanyuk (1975) on the thermal decomposition products of polystyrene foams. The major air contaminants formed at aluminum melting temperatures [700–800°C (1290°F–1470°F)] in decreasing concentration, were carbon dioxide, benzene, styrene, carbon soot, and methane. At ferrous metal-melting temperatures [1400–1500°C (2550°–2730°F)] the major products were carbon soot, methane, acetylene, carbon monoxide, and hydrogen.

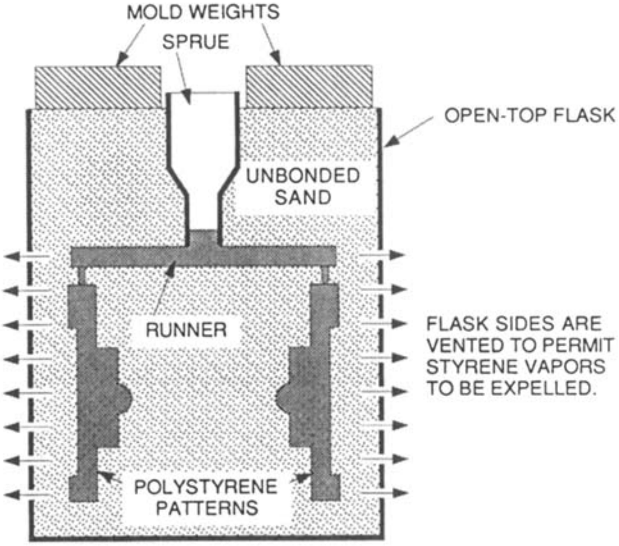

Figure 8.10 Evaporative pattern casting.

In an attempt to more closely model metal-casting conditions, the NIOSH investigators identified the concentrations of air contaminants formed during pouring, cooling, and shakeout for both green sand and evaporative pattern casting for aluminum and ferrous parts (Gressel et al., 1988).The conclusions of the study are as follows:

1. Evaporative pattern casting produced more soot and hydrocarbons during pouring than green sand at both aluminum and ferrous casting temperatures.
2. Hydrocarbon emissions from evaporative pattern casting were greater than for green sand molds during cooling and shakeout.
3. Carbon monoxide emissions were not significant for either green sand or evaporative pattern casting molds during pouring of aluminum; for iron, the carbon monoxide emissions were substantially lower for evaporative pattern casting.
4. In evaporative pattern casting molds for aluminum the major hydrocarbon were styrene and toluene; for ferrous casting with green sand, the major contaminants also included benzene and ethyl benzene.
5. A short burst of soot with associated polycyclic aromatic hydrocarbons is released during pouring cup evaporation.

The investigators identified the soot and benzene releases as the major concerns during pouring and shakeout. A series of recommendations were made concerning the design of the pouring cups and sprues, reduction in pouring rate, and the use of vacuum assist.

8.5 COREMAKING

The core is a refractory element placed in the mold to define a cavity or void in the final casting. Since the molten metal will flow around it, the core must be mechanically strong during pouring and yet become friable after pouring and cooling to allow easy removal from the casting. Cores are made in a fashion similar to that of molds. In the oldest system in use, core sand is prepared in a muller by mixing silica sand with an organic binder such as linseed oil and starch or dextrin. The sand is packed in a core box with a cavity defining the shape of the core. The fragile core is then removed and cured in a core oven at approximately 200°C (400°F) to achieve a hard refractory form (see Figure 8.11).

Core ovens handling oil-based cores are notorious air pollution sources, releasing acrolein and other aldehydes to the workplace and the surrounding neighborhood. For this reason and certain other production limitations, this system is rarely seen in modern-day foundries. Since the 1950s there has been a revolution in core manufacturing techniques. The new coremaking procedures are based on a series of binder systems shown in Table 8.4. Certain binder systems require core box heating, others require gassing to cure the system, and many cure at room tem-

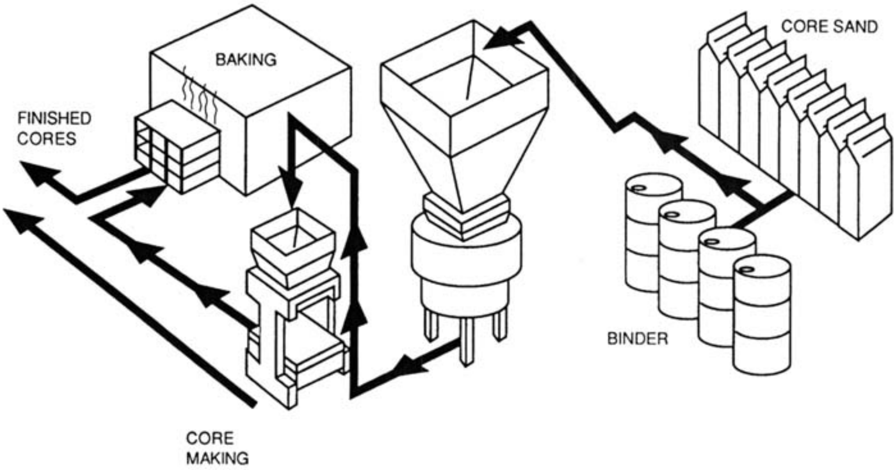

Figure 8.11 Schematic of coremaking.

perature. As described later, these systems may or may not release air contaminants during mixing and curing, but most release thermal decomposition products in pouring and shakeout operations.

In high-production foundries, cores are usually made on semiautomatic core machines with multiple cavities. The core machines fill the cavities in the dies with core sand (coreblowing), the die or core box may be heated or gassed to initiate curing, and the core is ejected. The finishing operations may involve a simple dressing-off with a knife or hand and machine sanding with resulting dust exposure. The repair of small defects is done with a putty knife and a filler compound. The cores may be brushed, dipped, or spray coated; the coatings may be water- or solvent-based. The entire operation may be conducted by one person, or in a large foundry the tasks may be divided between a muller operator, a core machine operator, and a core finisher.

The principal resin systems and the occupational health problems they present are outlined below.

8.5.1 Sodium Silicate System

This system has been in widespread use since its introduction in the mid-1950s; happily it represents a minimal health hazard to workers. The core sand is prepared by mixing 2–6 parts of sodium silicate (water glass) to 100 parts of silica sand with certain other additives including sugars, iron oxide, carbon, and various polymers. After the core box is filled and faced, the core form is cured by passing carbon dioxide through the core sand with a lance, cup, or pad. A reaction takes place, forming sodium carbonate and silicon dioxide gel which bonds the sand in place. A number of chemical hardeners, including ferrosilicon, sodium silicofluoride, dicalcium silicate, Portland cement, and glycerol mono-, di-, and triacetate, may be used in place of carbon dioxide. Workers handling the concentrated water glass, a strongly alkaline solution, should wear personal protective equipment including gloves, aprons, and goggles. The chemical activators also require standard chemical handling procedures.

In the carbon dioxide system, the gas vented from the core box does not normally present a problem in an open workplace; however, if the process is conducted in a molding pit or other enclosed space, significant carbon dioxide, concentrations may exist. Thermal degradation products released during pouring and shakeout operations are those common to any sand molding operation. The chemical hardening agents, other than carbon dioxide, will degrade thermally during pouring and form carbon monoxide and other contaminants. A complete description of the thermal degradation products of these activators is not available at this time; however, general guidance is presented in Table 8.5.

8.5.2 Hot-Box System

In this process thermosetting resins such as phenol-formaldehyde, urea-formaldehyde, furfuryl alcohol–urea formaldehyde, or other combinations are mixed with sand and a catalyst to form a system that will cure to a solid mass in a heated core box. A common blend of components is 100 parts sand, 2 parts resin, and 0.4 parts catalyst. A variety of catalysts, including ammonium chloride, ammonium nitrate, and magnesium oxide, are in use. After mixing in a muller, the sand, resin, and catalyst are injected into a metal die heated to a temperature of 204–260°C (400–500°F). The compressed core sand mix is cured to a solid mass in 1 or 2 min. The core is then ejected to a cooling station; during this period significant off-gassing occurs and good local exhaust ventilation is required.

In a study of a well-engineered hot box core production area using a furfuryl alcohol resin (Furan system), the potential air contaminants were identified as furfuryl alcohol, formaldehyde, phenol, carbon monoxide and respirable silica. The availability of local exhaust ventilation and suitable replacement air maintained the contaminants within existing exposure standards (NIOSH, 1979).

Shell coremaking is another hot-box system identical to the shell-molding process described above and includes skin contact with hexamethylene tetramine and air contaminants such as ammonia, phenol, and formaldehyde, as noted in Table 8.6 (NIOSH, 1985). The thermal degradation products noted in pouring and shakeout are similar to those for other phenol- and urea-based systems.

Precautions are required in handling the resin and catalyst in concentrated form while preparing the mix. Such precautions should include skin and eye protection for both the urea- and phenol-based resins. Ventilation control is required on the mixer, the coremaking machine (including the coreblowers), the cool-down location, and the pouring, casting, cooling, and shakeout stations.

The potential air contaminants from the various hot box-core systems, as listed in Table 8.6, include ammonia, formaldehyde, phenol, and furfuryl alcohol. The exact composition depends on the type of resin system in use.

TABLE 8.5 Potential Hazard Evaluation of Chemical Emissions from Foundry Molds

	Green Sand	Sodium Silicate Ester	Core Oil	Alkyd Isocyanate	Phenolic Urethane	Phenolic No-Bake	Low N_2 Furan-H_3PO_4	Med N_2 Furan-TSA	Hot Box Furan	Phenolic Hot Box	Shell
Carbon monoxide[a] (30 min)	A[b]	A	A	A	A	A	A	A	A	A	A
Carbon dioxide[a] (30 min)	B[c]	B	B	B	B	B	B	B	B	B	B
Sulfur dioxide	B	C[d]	C	C	C	A	B	B	C	C	B
Hydrogen sulfide	B	C	C	C	C	B	B	B	C	C	C
Phenols	B	C	C	C	B	B	C	C	C	C	C
Benzene	B	B	B	B	B	B	C	B	B	B	B
Toluene	B	C	C	B	B	B	C	B	C	C	B
m-Xylene	C	C	C	B	B	C	B	B	C	C	C
o-Xylene	C	C	C	B	B	C	B	C	C	C	C
Naphthalene	C	C	C	C	C	C	C	C	C	C	C
Formaldehyde	C	C	C	C	C	C	C	C	C	C	C
Acrolein	C	C	C	C	C	C	C	C	C	C	C
Total aldehydes (acetaldehyde)	C	C	C	B	C	B	C	B	C	C	C
Nitrogen oxides	B	C	C	B	C	C	C	B	B	B	C
Hydrogen cyanide	C	C	C	B	B	C	B	B	B	B	B
Ammonia	C	C	C	C	C	C	C	B	A	A	B
Total amines (as aniline)	C	C	C	C	B	C	C	B	B	B	B

Source: Scott et al. (1977).

[a] Measured in ppm, determined from graphical integration

[b] A = chemical agent present in sufficient quantities to be considered a definite health hazard. Periodic monitoring of concentration levels in work place recommended.

[c] B = chemical agent present in measurable quantities, considered to be a possible health hazard. Evaluation of hazard should be determined for given operation.

[d] C = chemical agent found in minute quantities. Not considered a health hazard under normal conditions of use.

TABLE 8.6 Airborne Emissions from Hot-Box Systems During Mixing, Molding, and Coremaking[a]

Chemicals	Core Oil	Furan Hot Box	Phenolic Hot Box	Shell
Carbon monoxide	?[b]	?	?	?
Formaldehyde	0[c]	?	X[d]	X
Hydrogen cyanide	0	0	0	?
Ammonia	0	0	0	X
MDI	0	0	0	0
Sulfur dioxide	0	0	0	0
Hydrogen sulfide	0	0	0	0
Phenols	?	0	?	?
Benzene	?	?	?	?
Toluene	?	?	?	?
Furfuryl alcohol	0	?	?	0
Methanol	0	?	?	0

Source: Adapted from NIOSH (1985).

[a] *Note*: Assuming normal ventilation, optimized binder usage, and proper handling of binder system.

[b] ? = Possibly present in working environment—depending upon specific formulation and sand quality.

[c] 0 = Not expected to be present in sufficient quantities to be considered a health hazard.

[d] X = Present in sufficient quantities to be considered a possible health hazard.

8.5.3 No-Bake Systems

Efforts to eliminate oven and core box heating processes led to the development of a series of sand–resin–catalyst systems that cure at room temperature. These systems involve unique exposure patterns to contaminants not previously seen in the foundry environment.

A series of acid-cured resin binding systems including urea- and phenol-formaldehyde alone and in combination with furfuryl alcohol (Table 8.4) are commonly used in foundries for both cores and molds.The urea-formaldehyde and furfuryl alcohol–urea-formaldehyde systems utilize phosphoric acid-based catalysts or hardeners while strong acids such as toluene sulfonic, benzene sulfonic, and sulfuric acids are used with phenol-formaldehyde and the phenol–formaldehyde–furfuryl alcohol system. A second popular no-bake resin is a urethane system utilizing a gas catalyst. Such systems are almost exclusively used for core applications, as described in a NIOSH Health Hazard Evaluation (NIOSH, 1988). The proprietary system (Isocure ™) used in the foundry under study, consisted of a phenol-formaldehyde resin, methylene bisphenyl diisocyanate, and the gas catalyst dimethylethylamine. In this system the resin and isocyanate components are blended with the core sand in equal amounts (1–1.5%) in a screw muller and then transported to the core machine. After pneumatic injection of the sand–resin mix into the core box (core-blowing), the gas catalyst with a nitrogen carrier gas is passed through the core mass. Reaction takes place rapidly and the solid core is ejected from the core box.

TABLE 8.7 Airborne Emissions from No Bake Systems During Mixing, Molding, and Coremaking[a]

Chemicals	Furan No-Bake	Furan Hot Box (TSA)[b]	Phenolic No-Bake (TSA)	Phenolic Urethane
Carbon monoxide	0[c]	0	0	0
Formaldehyde	?[d]	?	X[e]	?
Hydrogen cyanide	0	0	0	0
Ammonia	0	0	0	0
Aromatic amines	0	0	0	?
MDI-Isocyanates	0	0	0	0
Sulfur dioxide	0	0	?	0
Hydrogen sulfide	0	?	?	0
Phenols	?	?	X	?
Benzene	0	?	?	0
Toluene	0	?	?	?
Furfuryl alcohol	?	?	0	0
Methanol	0	?	?	0

Source: Adapted from NIOSH (1985).

[a] *Note*: Assuming normal ventilation, optimized binder usage, and proper handling of binder system.

[b] TSA = Toluene sulfonic acid.

[c] 0 = Not expected to be present in sufficient quantities to be considered a health hazard.

[d] ? = Possibly present in working environment—depending upon specific formulation and sand quality.

[e] X = Present in sufficient quantities to be considered a possible health hazard.

Two of three core machine operators were exposed to concentrations of dimethylethlamine above the NIOSH REL for this catalyst. Only one of four core machine helpers were exposed above the action level. In an Australian study of a foundry using the Isocure process, the methylene bisphenyl diisocyanate concentrations at the coremaking machines were 0.001 ppm or less (Low and Mitchell, 1985). An earlier study by NIOSH of a system using triethylamine vapor as the catalyst showed triethylamine concentrations of 5–15 ppm and silica dust concentrations at approximately the PEL owing to blow seal leakage (NIOSH,1979).

A range of hazards exists from both the acid and urethane systems. Skin and eye contact with the principal resins should be avoided. The strong acids used as catalysts in the phenolic-furan systems demand attention to safe handling procedures and personal protective equipment. Exposure to the isocyanates in the urethane systems may cause pulmonary asthma at low concentrations. As noted in Table 8.7, significant contaminant concentrations occur when the sand–resin systems are weighed out and mixed, at the core machine and core hanger storage, and during pouring and shakeout (NIOSH, 1985). Skin contact must be minimized and scrupulous housekeeping practices followed and encouraged by providing disposable paper covers on work surfaces.

8.6 METAL PREPARATION AND POURING

The process of casting includes preparation of the charge materials, preheating of the charge furnace and ladles, melting of the charge in the furnace, fluxing of the melt both in the furnace and at the ladle to remove silicates and oxides, inoculation of the charge with materials for improved metallurgical properties, and tapping of the furnace (Figure 8.12). It also includes pouring from furnace to a receiving ladle with subsequent transfer to smaller pouring ladles and pouring of the melt into the prepared molds. The major health hazards in both ferrous and nonferrous operations include exposure to toxic metal fumes, carbon monoxide and other toxic gases, and heat stress.

The potential exposures to metal fumes are listed in Table 8.8 and the thermal degradation products from the molds and cores in Tables 8.5, 8.6, and 8.7.

8.6.1 Furnace Melting

8.6.1.1 Arc Furnaces. The electric arc furnace has replaced the open hearth as the major furnace in large steel foundries (see Figures 8.12 and 8.13). The furnace is charged with ingot, scrap, and the necessary alloying metals. An arc is drawn

TABLE 8.8 Dust and Fume Exposures from Metal Melting and Pouring

Metal	Dust or Fume	Occurence
Iron and steel	Iron oxide	Common
	Lead, leaded steel	Common
	Tellurium	Rare
	Silica	Common
	Carbon monoxide	Common
	Acrolein	Rare
Bronze and brass	Copper	Common
	Zinc	Common
	Lead	Common
	Manganese	Rare
	Phosphine	Rare
	Silica	Common
	Carbon monoxide	Common
Aluminum	Aluminum	Common
Magnesium	Magnesium	Common
	Fluorides	Common
	Sulfur dioxide	Common
Zinc	Zinc	Common
Cadmium	Cadmium	Common
Lead alloys	Lead	Common
	Antimony	Common
	Tin	Common
Beryllium	Beryllium	Common
Beryllium–copper	Beryllium	Common
Uranium	Uranium	Rare

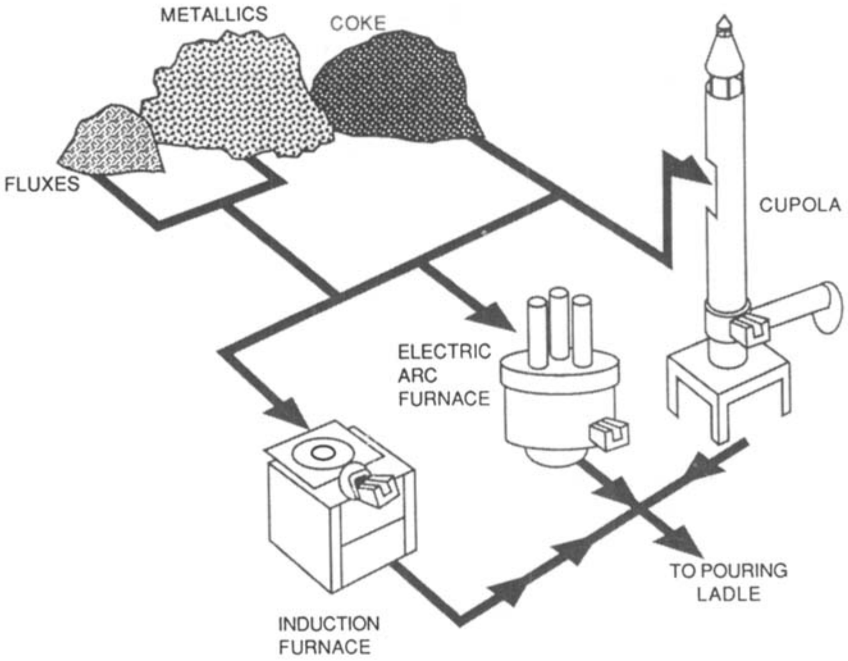

Figure 8.12 Schematic of metal melting.

between the three carbon electrodes and the charge, heating the charge and quickly melting it. A slag cover is formed with various fluxing agents to reduce oxidation of surface metal, refine the metal, and protect the roof of the furnace from damage from excessive heat radiation. When the melt is ready for pouring, the electrodes are raised and the furnace is tilted to pour into a receiving ladle.

These furnaces produce tremendous quantities of metal fume, resulting in both workplace and air pollution problems. Local exhaust ventilation systems based on side draft or enclosing hoods are available to handle fume generation during the melt cycle. A slag door hood and pour spout hood must be included in the ventilation system. Since metal fume will escape during the operation, high-volume roof exhausters are located over the furnace area to remove fugitive losses. Another approach to exhaust ventilation on this equipment is the use of partitions dropped from the roof to form a modified canopy hood. The problem with this control approach is that one is faced with a difficult air cleaning problem, that is, a large air volume and a low fume concentration. A serious noise problem is due to the intermittent make-and-break of the arc on these furnaces.

8.6.1.2 Induction Furnaces. This furnace (Figure 8.14) is used widely in both nonferrous and alloy steels foundries. A melting refractory is surrounded by water-cooled copper coils powered by a high frequency power supply. The outer winding induces current flow in the outer edge of the metal charge and, because of the high resistance, the metal charge is heated and melting progresses from the edge of the charge to the center.

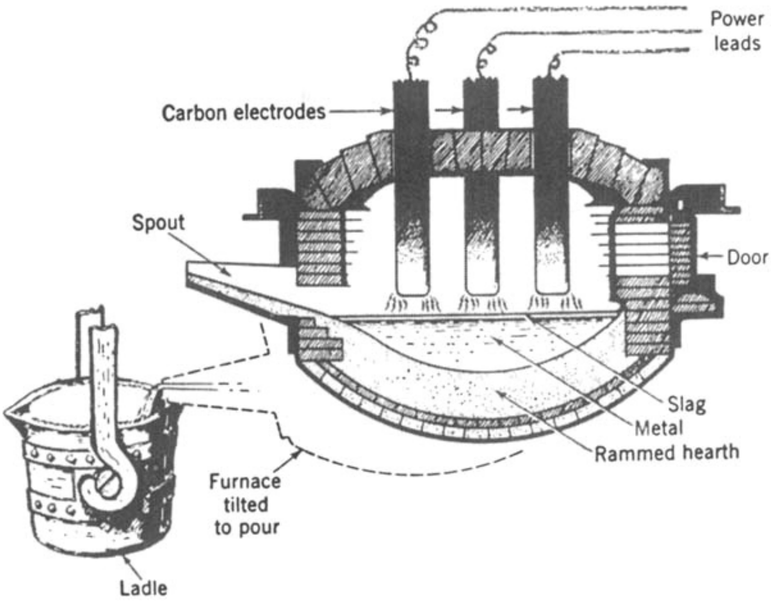

Figure 8.13 An arc furnace. Source: *Manufacturing Processes and Materials for Engineers* by L. E. Doyle. Copyright 1969. Reproduced with permission of Prentice Hall, Inc.

The metal fumes are best controlled by enclosing hoods, although canopy hoods and dilution ventilation are utilized frequently. For low-alloy steels, the canopy hood or dilution ventilation may provide adequate control; however, an enclosing hood is required for nonferrous metals.

8.6.1.3 Crucible Furnaces. The crucible containing the charge is heated directly by a gas or oil burner or, occasionally, coke. This furnace (Figure 8.15) is widely used for nonferrous alloys. The principal hazards are carbon monoxide, metal fumes, burner noise, and heat stress. Ventilation is usually accomplished by a canopy hood at the furnace line, although perimeter slot hoods provide better control.

8.6.1.4 Cupola. Over 60% of the gray iron castings produced in the United States are produced by the cupola (Figure 8.16). It is the most economical way to convert scrap and pig iron to usable molten iron. As produced, the metal is gray iron; if inoculated with magnesium or cerium at the ladle, a ductile iron is formed. As shown in Figure 8.16, alternate layers of coke, limestone, and metal are periodically charged to the furnace.

A major hazard from cupola operation is exposure to carbon monoxide. This is especially true if twin cupolas are in use and one is under repair by maintenance workers. Iron oxide fume is not a direct problem in the workplace, but scrap iron may contain small quantities of toxic metals such as lead and cadmium that may present significant exposures.

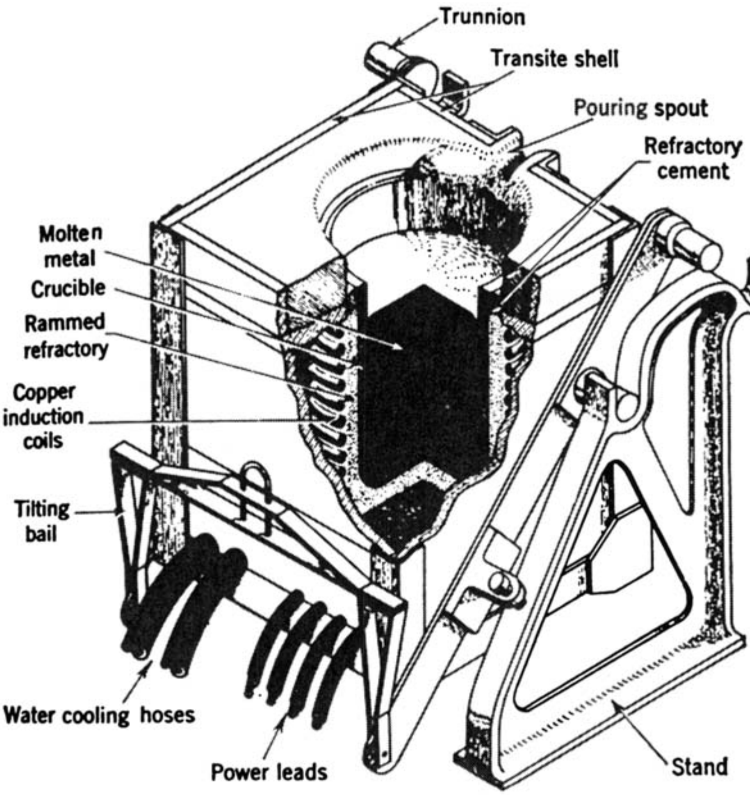

Figure 8.14 An induction furnace. Source: *Manufacturing Processes and Materials for Engineers* by L. E. Doyle. Copyright 1969. Reproduced with permission of Prentice Hall, Inc.

Personnel who operate and repair cupolas have a serious heat problem. Where a fixed pouring station is used, an air conditioned workstation may be installed for the ladle man. Reflective barriers are also effective in minimizing the radiant heat load.

8.6.2 Transfer, Pouring, and Cooling

Fume releases during pouring to the receiving ladle, subsequent transfer to the pouring ladle, and pouring at the mold line require local exhaust ventilation (Figure 8.17). Two approaches are possible for ventilation control of pouring operations. If the molds are transferred by conveyor, the pouring may be done at a fixed location with an installed local exhaust hood. If the molds are poured on the floor, the ladle must be equipped with a mobile hood using some variation of a "zipper" exhaust manifold.

Inoculation of heats with special metals places the worker in close proximity to the furnace or ladle with resulting high exposures to heat, metal fume, noise, and accidental metal splashes. The most recent inoculation techniques, including bell and sandwich inoculation, reduce these hazards, although they still warrant atten-

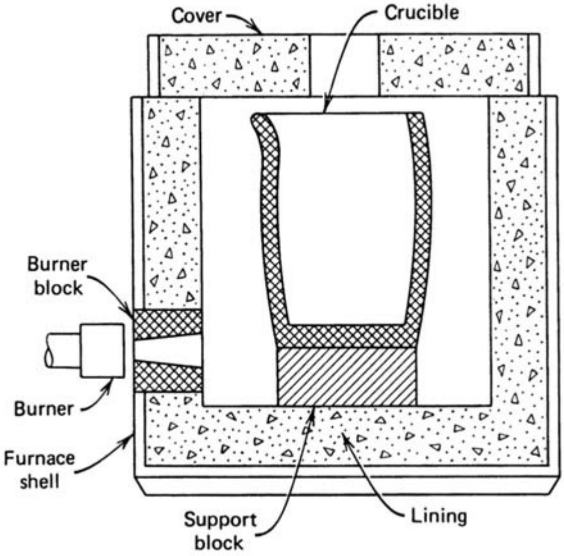

Figure 8.15 A crucible furnace. Source: *Manufacturing Processes and Materials for Engineers* by L. E. Doyle. Copyright 1969. Reproduced with permission of Prentice Hall, Inc.

tion. Lead, a common inoculant to improve machinability of steel, illustrates the potential hazard during inoculation. Depending on how it is added, from 20 to 90% percent of the lead may be released to the atmosphere. Concentrations of lead up to 1.0 mg/m^3 may be noted at the operator's level during inoculation and high levels may exist in the crane cab over the ladle area.

Silicate-forming materials and oxides must be removed from the metal before pouring. This requires the addition of fluxing agents and removal of the slag that is formed. To protect the worker from fume exposure and heat stress, a combination of shielding and distance is frequently used. On large operations with severe heat stress, slagging is conducted mechanically by remote control.

Operators directly involved in handling the molten metal may require personal protective equipment including aluminized clothing, tinted glasses and face shields, and head protection. A combination of engineering and work practice controls must be installed to handle heat stress. The acclimatization of the worker requires at least one week, so care should be observed during the first days of the warm season and during the start-up week after vacation.

The crane operator has a special exposure that warrants attention. The metal fume lost from the floor operations is cleared by roof exhausters and high air concentrations of fume may be noted at the crane level. Obviously, if remote radio-controlled cranes are used, the operator is not exposed. If an operator must be positioned in the crane, one should consider enclosure of the cab with a supply of filtered, conditioned air.

After pouring and before shakeout, molds are moved by a conveyor to a staging area for cooling. A critical exposure to carbon monoxide may occur in this area, especially if sea coal is added to the molding sand to improve the surface of

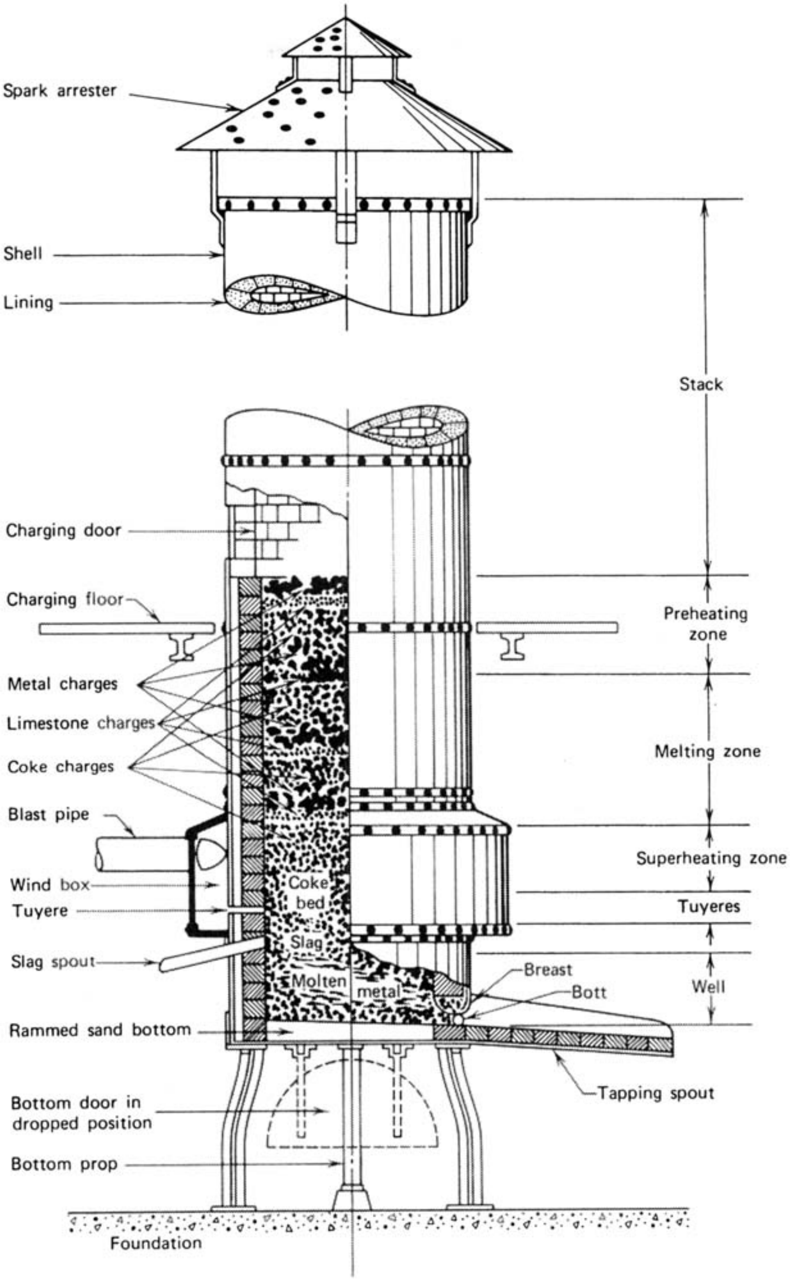

Figure 8.16 A cupola furnace. Source: *Manufacturing Processes and Materials for Engineers* by L. E. Doyle. Copyright 1969. Reproduced with permission of Prentice Hall, Inc.

Figure 8.17 Pouring cast iron.

the casting. The sea coal forms methane, which burns off with the production of carbon monoxide. The generation rate is relatively constant for the first 20 min or so after pouring and then it decays exponentially with time. I have noted carbon monoxide concentrations of 200–300 ppm in the staging area of a small gray iron foundry operating with poor ventilation. Control may be achieved by routing the molds through a exhausted cooling tunnel.

Foundries casting very large parts with limited melt capacity use hot topping powders to decrease the rate of cooling in the feeding head. These exothermic powders may be based on aluminum with an oxidizing agent such as potassium or sodium nitrate and a fluoride of an alkali metal that controls the reaction. The hot-topping powders may reach temperatures of 1800°C (3270°F) with the release of a heavy particulate cloud. This operation has not been thoroughly studied and the chemical species released will vary widely, depending on the exact composition of the powder.

8.6.3 Shakeout

The casting is removed from the mold at the shakeout position (Figures 8.18 and 8.19). In the simplest system, small to medium-sized castings are placed on a vibrating screen; the molding sand drops to a hopper through the screen for return

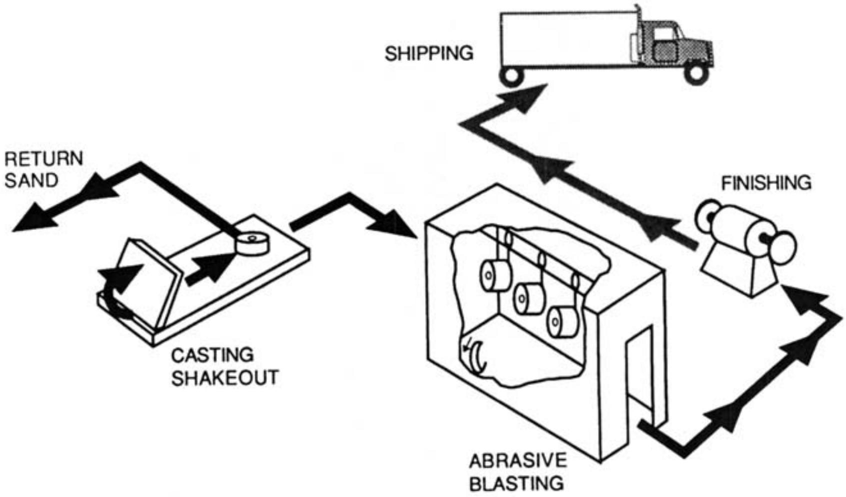

Figure 8.18 Schematic of finishing operations.

by conveyor for reconditioning; the flask is routed back to the molding line, and the casting is hooked free for cleaning. Small castings can be removed from the flasks by a "punch-out" process. This method is superior to shakeout since it generates less dust; however, shakeout is still required for removal of surface sand and cores. Shakeout is a hot, demanding job with serious exposure to particulates, gases, vapors, noise, and vibration.

Considerable data are available demonstrating significant air concentrations of silica at foundry shakeout operations. The resin–sand systems used in molding and coremaking are the source of various gases and vapors, reflecting the composition of the resin–catalyst system as shown in Tables 8.6 and 8.7. If sea coal is used in the molding sand, there may be a serious exposure to carbon monoxide, although the carbon monoxide generation rate has usually dropped off by the time the mold reaches shakeout. Few published data are available on the exposure of shakeout operators to toxic metal particulate resulting from sand contamination, although this must be considered a potential problem.

The principal control of air contaminants at the shakeout is local exhaust ventilation utilizing enclosures and side- or downdraft hoods. With the exception of well-designed enclosures for automatic shakeout of small castings, none of the systems are completely effective. Many approaches have been considered to replace or augment the conventional shakeout. Rather than vibrating the casting free from the molding sand, hydroblast units have been utilized to free the casting while generating little dust. Small molds may be placed in a special tumbler where the parts are separated from the sand. Failing good control, the shakeout is conducted during an off-shift to reduce the number of persons exposed.

The removal of cores from the castings is accomplished either at the shakeout or at a special core knockout station. High-pressure water streams have been successfully applied in this operation.

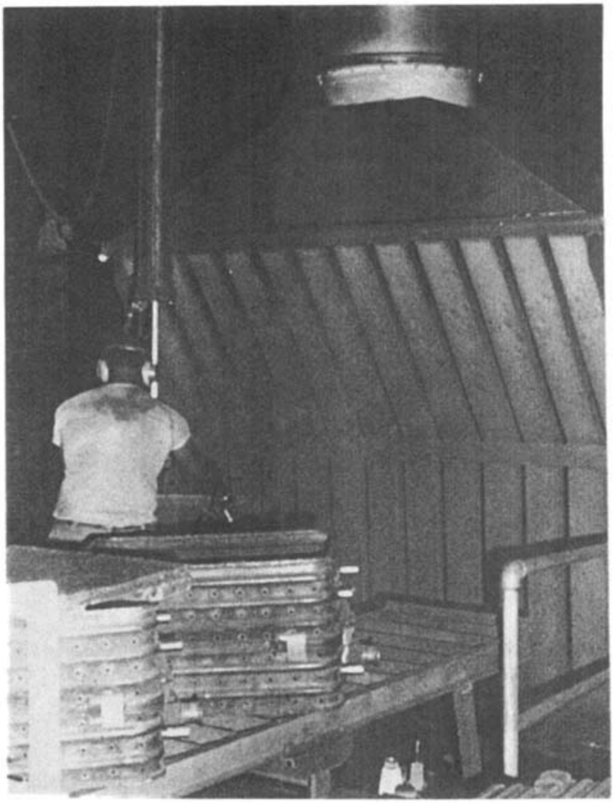

Figure 8.19 Shakeout operation.

8.6.4 Cleaning and Finishing

After shakeout, the casting is processed in the finishing room. Complex cores require special core knockouts that may be either manual or mechanized operations depending on the core geometry and production rate. The extraneous metal, including sprue, risers, and gates on gray iron castings, shown in Figure 8.20, are removed by a sharp rap with a hammer; burning or cutoff wheels are used on steel and alloys castings. The parts are frequently cleaned by abrasive blasting or hydroblast and rough finishing is done by chipping and grinding. If the castings are clean, there is limited exposure to silica sand during finishing; however, in steel foundries the sand will fuse on the surface and some of the silica may be converted to tridymite or cristobalite.

It is clear that a significant percentage of foundry workers in the United States continue to be exposed to excessive concentrations of silica dust. Silica concentrations in shakeout, chipping, grinding, and other cleaning operations are among the highest. The iron and steel foundries have higher exposures than nonferrous operations, apparently owing to the greater sand penetration of castings from the high temperatures.

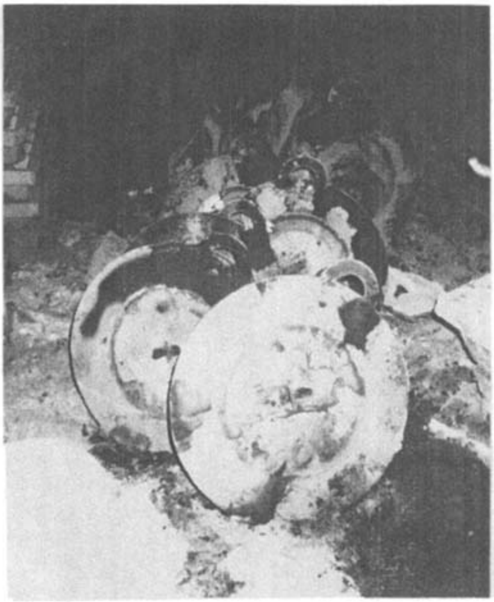

Figure 8.20 Casting after shakeout before extraneous metal and fused sand are removed.

8.7 CONTROL TECHNOLOGY

Although other air contaminants exist, silica and carbon monoxide continue to be the major health hazards in the foundry. Noise is the most important physical stress.The elimination of coal in green sand molding has been given attention in the United Kingdom (Radia, 1977) as a method of reducing air concentrations of carbon monoxide and polycyclic aromatic hydrocarbons. However, in the 1990s there continues to be widespread use of coal in gray iron foundries in the United States.

The hazard from silica varies with the physical state of the sand, its chemical composition, and the method of handling. Since the sand is initially dry, the mixing or mulling operation is dusty, and local exhaust ventilation is required even though the sand is coarse. After this point, the moisture content is high and little dusting occurs during the molding operation. After casting, the sand becomes friable and dusty; serious dust exposures may occur during shakeout and sand conditioning.

Research conducted by the British Cast Iron Research Association (BCIRA) has demonstrated that foundry sand with a moisture content greater than approximately 25% does not present a dust problem during normal handling (Shaw, 1977). This laboratory observation is borne out in plant observations where foundry operations right up to the pouring station present little dustiness potential. From that point on, the sand becomes friable, dry, and dusty. It is therefore imperative to add moisture immediately at the shakeout by the following techniques:

Use a pan mill at the shakeout and immediately add water.

Add water at the belt from the shakeout.

Add prepared molding sand with high moisture content to the shakeout sand.
Where possible, add sea coal and clay as a slurry.

Additional advice is presented by the BCIRA on the proper design of conveyor belts and hoists to minimize spillage. Foundry sand spilled from conveyors dries out and easily becomes resuspended, increasing workers' exposure to silica.

Historically, the approach to dust control in sand foundries has been the use of control ventilation coupled with housekeeping and wet methods (ACGIH, 1992). Low volume–high-velocity capture systems are finding increased application on grinding and chipping operations in finishing rooms. In recent years the use of non-siliceous parting compounds instead of silica flour has demonstrated the value of substitution as a control. Changes in procedure such as the Schumacher method, which mixes some prepared moist molding sand with dry shakeout sand before it is conveyed back from the shakeout, result in impressive dust reduction. The introduction of permanent mold techniques will, of course, have a major impact on silica sand usage and the resulting worker exposure.

Foundry noise is a major problem (Table 8.9). The American Foundrymen's Society has published an excellent review of noise control on chippers and grinders, burners, electric arc furnaces, shakeout, molding operations, core and molding machines, and conveyors (AFS,1985). This document treats the most difficult problems in the foundry and provides state of the art technology solutions that have been evaluated in the industry.

Until the late 1970s, little attention was given to the occurrence of vibration induced disease, such as vibration-induced white finger (VWF), in the foundry pop-

TABLE 8.9 Noise Exposures in a Foundry

	Sound Level (dBA)		Permissible Exposure Time (hr)[a]	
Operation	Min.	Max.	Min.	Max.
Shakeout	105	115	1	0.25
Quick release–high pressure air	95	117	4	0.25
Air blowoff	100	120	2	0.25
Tumblers, unlined	100	115	2	0.25
Shotblast booths, outside booths	100	110	2	0.5
Chipping and grinding lines	95	115	4	0.25
Hopper vibrators	95	115	4	0.25
Molding machines	95	115	8	0.25
Millroom, general area	95	110	4	0.50
Man cooler fans	90	95	8	4
Sand slingers	90	95	8	4
Sand grinders	95	110	4	0.5
Wheelabrators®, loading, dumping	95	115	4	0.25
Hand ramming with air hammer	92	97	6	3

Source: Adapted from AFS (1985).

[a] Based on the OSHA standard of 90 dBA for an 8-hr day.

ulation. Studies in US foundries have demonstrated that VWF is a problem of major proportion, with a minimum prevalence of VWF of 50% in cleaning and finishing room personnel and latency periods as short as 1–2 years. A guide published in the United Kingdom recommends exposure limits for hand-transmitted vibration from vibratory tools of the type used in the foundry (Verma et al., 1982). The minimum control approach to this problem proposed by Pelmear and Kitchener (1977) includes:

Identification of high risk situations
Redesign of tools to minimize vibration
Use of vibration isolation pads where possible
Introduction of alternative work methods
Education of workers
Preemployment and periodic examinations of vibration-exposed persons
Transfer of affected workers to alternative work

REFERENCES

ACGIH (1992), *Industrial Ventilation, A Manual of Recommended Practice*, 21st ed., Committee on Industrial Ventilation, American Conference of Governmental Industrial Hygienists, Cincinnati, OH.

AFS (1985), *Industrial Noise Control—An Engineering Guide*, American Foundrymen's Society, Inc., Des Plaines, IL.

AFS (1993), *Health and Safety Guides*, American Foundrymen's Society, Inc., Des Plaines, IL.

Anon., (1968), *Mich. Occup. Health*, **13**, 4.

Bolt, Beranek, and Newman (1978), *A Consulting Service in Industrial Hygiene and Safety in the Foundry*, Report No. 3744.

Cleary, W. (1994), Personal communication.

Davis, I. (1994), Personal communication.

Elkins, H.E. (1959) The Chemistry of Industrial Toxicology, Wiley, New York.

Gressel, M. G., O'Brien, D. M., and Tenaglia, R. D. (1988), *Appl. Ind. Hyg.*, **3**, 11–17.

IARC (1984), "*Polynuclear aromatic compounds: Part 3. Industrial exposures in aluminum production, coal gasification, coke production, and iron and steel founding*," IARC Monographs Volume 34, International Agency for Research on Cancer, Lyon, France.

Knecht, U., Elliehausen, H. J., and Woitowitz, H. J. (1986), *Brit. J. Ind. Med.*, **43**, 834–838.

Kobzar, A. I. and Ivanyuk, E. G. (1975), *Liteinoe Proizvodstvo*, 7, 31.

Landrigan, P. I. L., Cherniack, M. G., Lewis, F. A., Catlett, L. R., and Hornung, R. W. (1986), *Scand. J. Work Environ. Health*, **12**, 32–39.

Low, I., and Mitchell, C. (1985), *Brit. J. Ind. Med.*, **42**, 101–105.

Mirer, F. (1977), ILO Stockholm, **3**, 311.

NIOSH (1979), *An Evaluation of Occcupational Health Hazard Control Technology for the Foundry Industry*, DHHS(NIOSH) Publ. No. 79-114, National Institute for Occupational Safety and Health, Cincinnati, OH.

NIOSH (1985), *Recommendations for Control of Occupational Safety and Health Hazards . . . Foundries*, DHHS(NIOSH) Publ. No. 85-116, National Institute for Occupational Safety and Health, Cincinnati, OH.

NIOSH (1988), Health Hazard Evaluation Report HETA 86-264, National Institute for Occupational Safety and Health, Cincinnati, OH.

Oudiz, J., Brown, J. A., Ayer, H., and Samuels, S. (1983)., *Am. Ind. Hyg. Assoc. J.*, **44**, 374–376.

Pelmear, P. L. and Kitchener, R. (1977), *Proceedings of the Working Environment in Iron Foundries*, British Cast Iron Research Association, Birmingham, UK pp. 13/1–13/7.

Pennsylvania Foundrymens Association (1981), *Casting for Safety*, **11**, 11.

Radia, J. T. (1977), *Proceedings of the Working Environment in Iron Foundries*, British Cast Iron Research Association, Birmingham, UK, pp. 18/1–18/13.

Scott, W. D., Bates, C. E., and James, R. J. (1977), *AFS Trans.*, **85**, 203.

Shaw, F. M. (1977), *Proceedings of the Working Environment in Iron Foundries*, British Cast Iron Research Association, Birmingham, UK pp. 17/1–17/3.

Trasko, V. M. (1956), *AMA Arch. Ind. Health*, **14**, 379–386.

USPHS (1950), *Health of Ferrous Foundrymen in Illinois*, US Public Health Service, Cincinnati, OH.

Verma, D. K., Muir, D. C. F., Cunliffe, S., Julian, J. A., Vogt, J. H., and Rosenfeld, J., (1982), *Ann. Occup. Hyg.*, **25**, 17.

Zimmerman R. E. and Barry, J. M. (1976), *AFS Trans.*, **84**, 15–20.

CHAPTER 9

Metal Machining

9.1 INTRODUCTION

The fabrication of metal parts from solid stock is done with a variety of machine tools. The occupational health hazards from these operations are similar, so they will be grouped together under conventional machining. Five special machining techniques—electrochemical machining, electrical discharge machining, hard metal tool grinding, laser cutting, and waterjet cutting—are also discussed in this chapter.

The major occupational health issues associated with metal machining operations are attributable to dermal contact and inhalation exposures to the machining fluids used in the operation. The association between skin contact with mineral oil-based machining fluids and squamous cell carcinoma was described in the United

Kingdom in the 1800s; mineral oil was classified as a carcinogen by the International Agency for Research in Cancer in 1987 (IARC, 1987). Although an early study by Southam (1928) attributed excess cancer of the lung and larynx to the inhalation of mineral oil based machining fluids, later epidemiologic studies in the 1970s and 1980s showed inconsistent findings. However, a recent study by Eisen et al. (1994) shows a twofold excess of cancer of the larynx for machinists exposed to mineral oil based machining fluids. Other malignancies attributed to machining fluids include cancers of the digestive tract (Decoulfe, 1978; Jarvholm et al., 1982; Vena et al., 1985). Bronchitis and asthma are also associated with inhalation exposures to machining fluid aerosols and a before and after work-shift decrement in pulmonary function has been noted by Kennedy et al. (1989).

Dermatoses from skin contact with machining fluids is, of course, the most common occupational disease of the industry and each year will affect one in three machinists (Adams, 1983). In addition to the occupational disease issues associated with machining fluids, there are important exposures to highly toxic metals being machined (e.g., beryllium) and a special risk is associated with the grinding of hard metal tools.

9.2 CONVENTIONAL METAL MACHINING PRACTICE

All dimensional machining operations are done by forcing the point of a cutting tool against the workpiece in a given direction with a controlled speed and force (Figure 9.1). The cutting element removes some of the workpiece by a shearing or abrading action. This material is released as a fine continuous wire-like chip, a heavy short chip, or as individual particles. Extremes of temperature and pressure occur at the interface between the cutting tool and the work. To cool this point, provide an interface lubricant, and help flush away the chips formed by the cutting tool, a machining fluid is directed to the cutting point in a solid stream (flood) or a spray. The terms applied to these machining fluids are shown in Table 9.1.

TABLE 9.1 Machining Fluid Nomenclature

Preferred	Widely Used Synonyms
Straight oil	Mineral oil Petroleum oil Cutting oil Neat oil
Emulsified oil	Soluble oil Water-based fluid Suds Emulsions
Synthetic fluid	Chemical fluid
Machining fluid	Cutting fluid Coolants Metal-working fluids

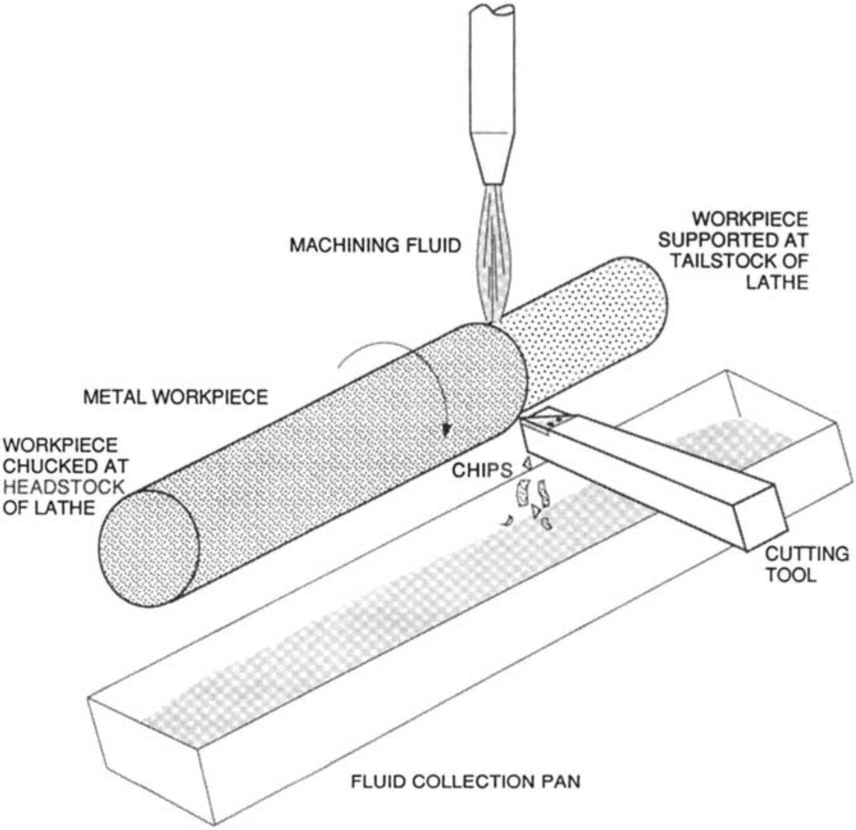

Figure 9.1 Components of a machining operation.

The role played by each of the four components of a machining operation identified in Figure 9.1 (machine tool, cutting tool, machining fluids, and workpiece metal), the health hazards they present, and controls for these hazards are discussed below.

9.2.1 Machine Tools

A large number of machine tools have been designed to accomplish dimensional cutting on a range of metals and plastics. It is important that the occupational health practitioner recognize the principal machine tools (lathe, milling machine, and grinder) encountered in most machine shops (Figure 9.2). The cutting tool may be fixed and the moving workpiece fed past the tool as in a lathe (Figure 9.2*a*), or the part may be fixed and the cutting tool moved past the stock as in a milling machine (Figure 9.2*b*). In a grinding operation both the tool, in this case the grinding wheel, and the workpiece are moving at high speeds (Figure 9.2*c*). The workpiece may be held by an adjustable collet or chuck on a lathe, mechanically clamped on the bed of a milling machine, or held in place with a magnet on the

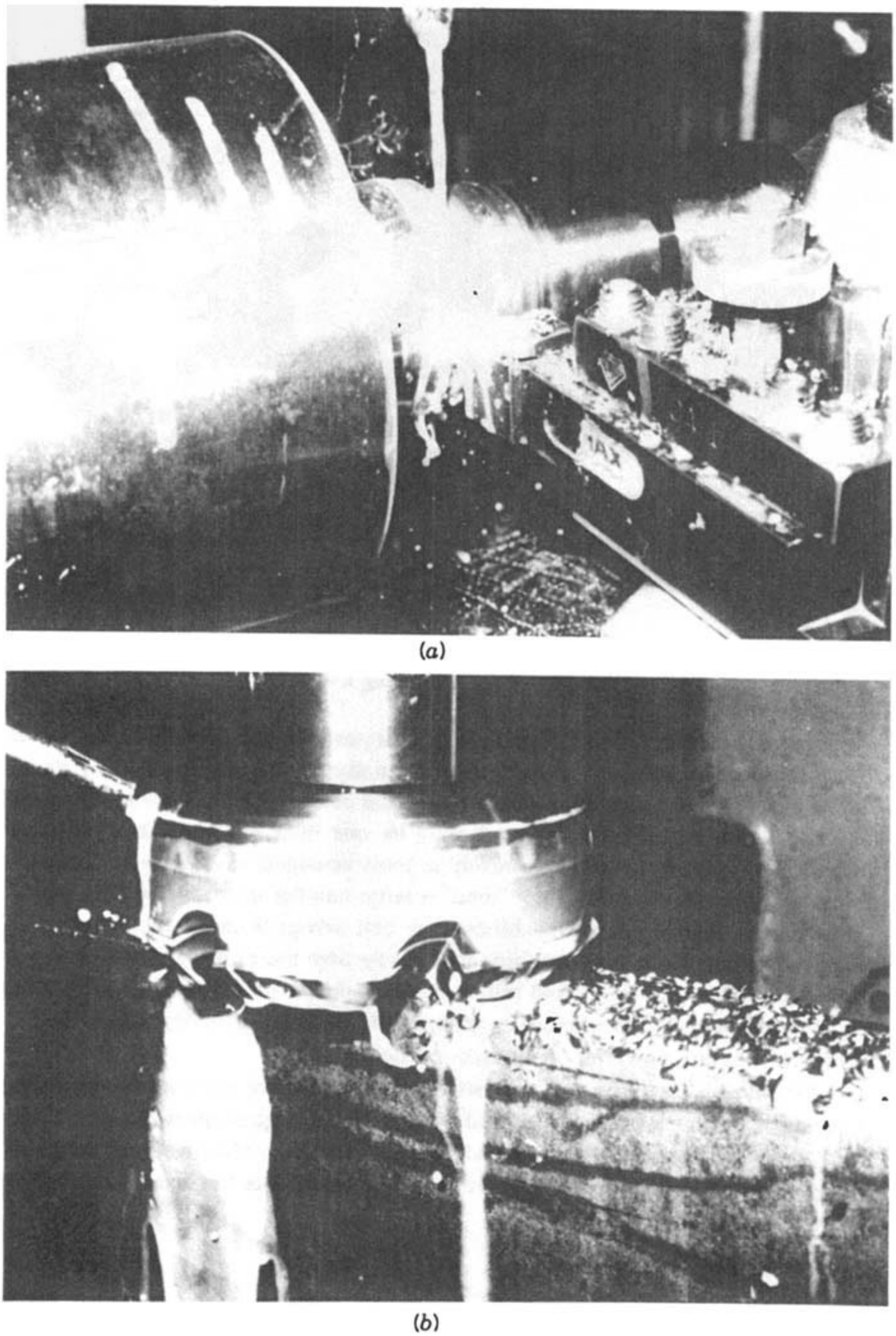

Figure 9.2 Principal machine tools. (*a*) Lathe operation—turning a shaft to a given diameter. (*b*) Milling a steel plate.

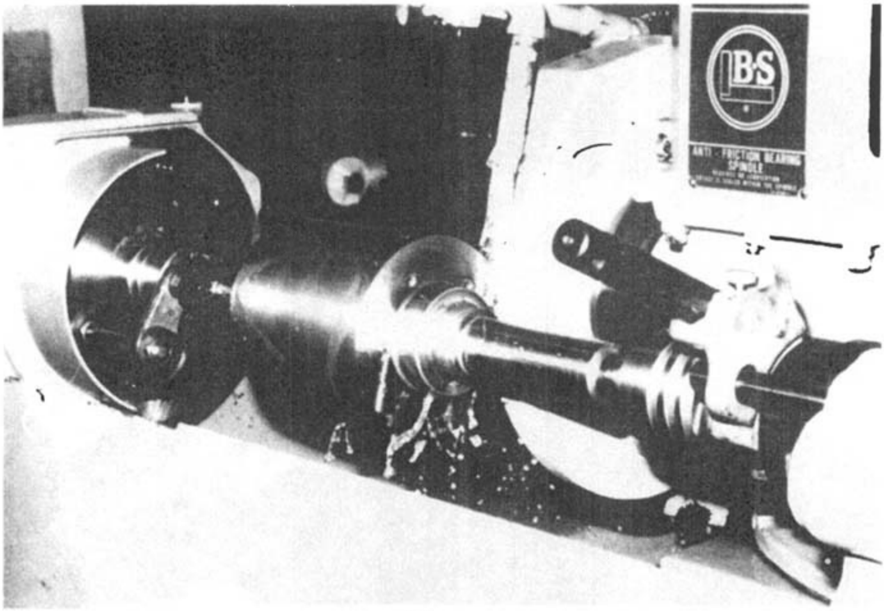
(c)

Figure 9.2 (*c*) Grinding a shaft.

workbed of a surface grinder. The cutting tool position, the workpiece speed, and the cutting tool speed may be controlled manually by the machinist or by numerical control (NC) or computer-assisted numerical control (CNC) systems. In a small job shop doing custom machining, it may be one man–one tool, in a large production shop with semiautomatic machine tools arranged in either a functional or group layout, each machinist may "tend" a large number of machines (Figure 9.3).

In old machine shops the machines were belt driven from overhead pulleys; in modern machine shops each machine tool has its own motor drive. The power train on a lathe rotates the chuck and the workpiece; power on a planer is delivered to the bed on which the workpiece is positioned. Both the grinding wheel and the workpiece bed are powered on surface grinders.

In the author's experience, machinists working in medium-sized shops are exposed to average sound pressure levels exceeding 85 dBA. In large shops with high machine tool density, the exposures may exceed 90 dBA. The most effective long range control is a machine tool purchasing specification of 80 dBA at the operator's position.

9.2.2 Cutting Tools

Special alloys have been developed for use in the manufacture of cutting tools. These materials include: (1) high-carbon steels with alloying elements of vanadium, chromium, and manganese; (2) high-speed steels containing manganese and tungsten; (3) special cobalt steels; (4) cast alloys of tungsten, chromium, and cobalt; and (5) tungsten carbide. The loss of material from the cutting tool is insignificant dur-

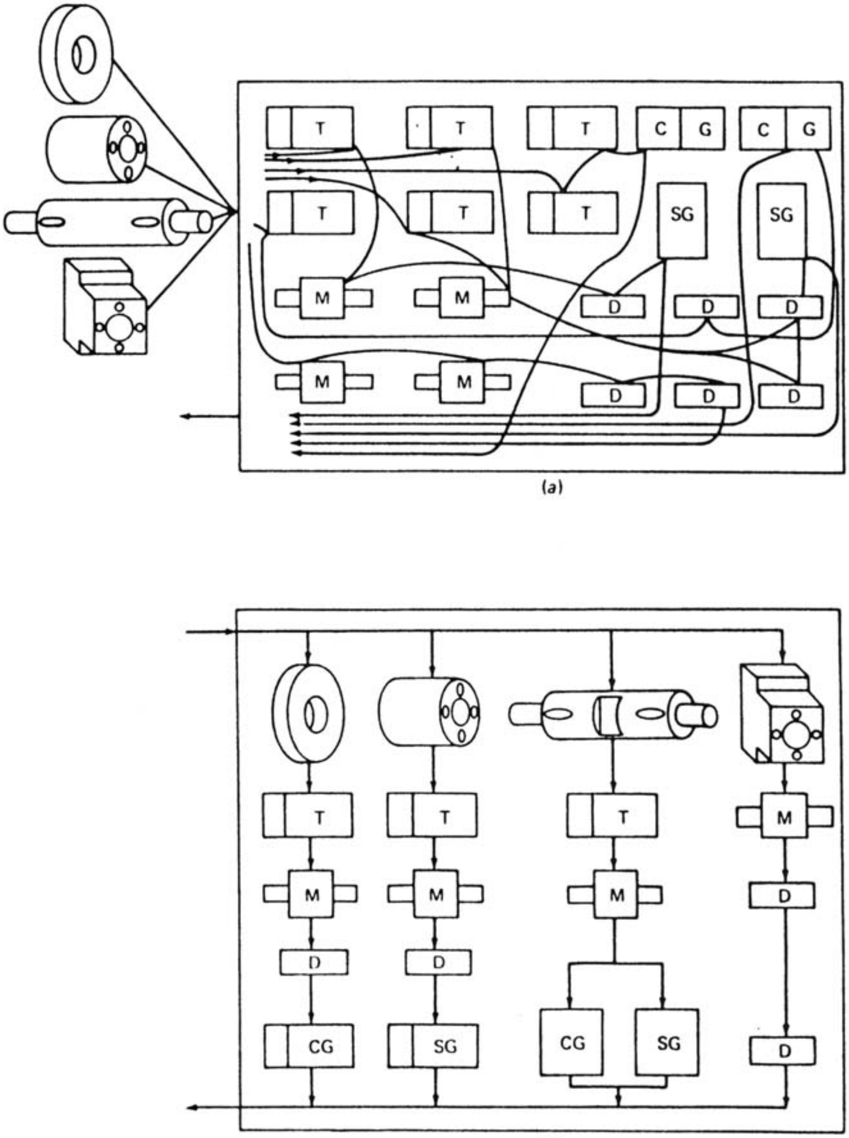

Figure 9.3 Plant layout of machine tools will vary but they are normally positioned by (a) machine type or functional layout or (b) material flow or group layout. T, turning; M, milling; D, drilling; SG, surface grinding; CG, cylindrical grinding. (Courtesy of McGraw-Hill Book Co.)

ing conventional machining and therefore does not represent a potential air contamination problem. On grinding operations, the cutting tools are individual grains of abrasive (aluminum oxide, silicon carbide, diamonds, or cubic boron nitride) embedded in a matrix. In the manufacture of the cutting tools, a significant exposure to toxic metal dusts occurs during grinding and dressing operations; these operations should be provided with local exhaust ventilation. The special hazards associated with the manufacture of tungsten carbide tools are discussed in Section 9.5.

9.2.3 Workpiece Metal

The metal machined in general industry ranges from mild steel with little potential health hazard to various high-temperature and stainless alloys containing chromium, nickel, and cobalt (see Appendix A for the composition of metal alloys). These three toxic alloying metals may present significant airborne exposures depending on the machining technique. Finally, all machining of highly toxic metals such as beryllium present significant potential exposures.

The common view held by most in the occupational health community is that machining of mild steel and its alloys with cutting tools does not result in significant airborne metal concentrations. This was confirmed in work under a UAW–GM sponsored study on machining fluids by Woskie et al. (1987) who found that less than 10% of the aerosol generated from grinding operations was nonoil; on conventional cutting operations such as turning and milling less than 2–3% was nonoil. Since all metal particles are found in the nonoil based fraction of the air sample it is obvious that the bulk of the airborne material originates from the machining fluids and minimal amounts of the metal workpiece becomes airborne. Machining operations on magnesium and titanium may generate explosive concentrations of dust, and these operations must be conducted with suitable ventilation control and air cleaning. The machining of cast iron is done dry and results in the release of airborne dust from the stock which may become a housekeeping problem.

Recent studies have shown that machining fluids may become contaminated with trace quantities of the base metal. The metals are then contacted by the worker via splashing or immersion of hands in the fluid in the course of the work. As will be discussed below, this contact route may be responsible for the sensitization to chromium, nickel, and cobalt that occurs in this industry.

9.2.4 Machining Fluids

Machining fluids are designed to cool and lubricate the interface between the cutting tool and the stock and to flush away chips. The proper machining fluid will extend tool life, improve surface finish, and improve dimensional stability of the part during machining.

9.2.4.1 Composition. These fluids are available in the form of: (a) mineral oils which contain greater than 80% mineral oil with the balance consisting of various additives; (b) emulsified oils consisting of 3–10% mineral oil, emulsifiers and other additives, and water; and (c) synthetic machining fluids usually consisting of active chemical ingredients in aqueous solution. The synthetic machining fluids are based on a complex group of water-soluble chemicals that result in a fluid that is basically a noncorrosive fluid with cooling and lubricating properties. A fourth class of machining fluids, semisynthetic, are based on emulsified oils with the addition of the chemicals found in synthetic oils.

The mineral oil based machining fluids are usually blends of paraffinic and naphthenic hydrocarbons from refinery streams. Since the 1970s, solvent refining or deep hydrotreating has been used to reduce the polycyclic aromatic hydrocarbon content of these oils and therefore their carcinogenic potential. Aromatics from the vacuum distillation of paraffinic and napthenic oils may be part of the blend.

Mineral oil based machining fluids have been in extensive use for decades, with the peak utilization probably in the 1960s. Since that time emulsified oil and synthetic machining fluids have seen a great surge in use. The composition of mineral oil machining fluids has changed with the addition of additives to improve the range of application and safety (Table 9.2). The complexity of the formulations and the potential for exposure to a range of chemicals can be identified by a review of the extensive number of lubricity and extreme pressure additives used in modern machining fluids systems (Table 9.3). The typical major components of emulsified and synthetic machining fluids are shown in Tables 9.4 and 9.5.

9.2.4.2 Exposure Data

Air Concentrations. Data are now available on the concentration of machining fluid aerosols and its particle size distribution for various metals and machining operations. Much of this information is available from a series of studies on the health status of machinists sponsored by the UAW–GM National Joint Committee on Health and Safety. In the phase of the study directed to retrospective occupational exposure assessment of machining fluid aerosols, Hallock et al. (1994) defined past exposures in three large machining facilities.The arithmetic mean concentrations for all samples taken prior to 1970 was 5.42 mg/m^3; from 1970 to 1989 the arithmetic mean concentration dropped to 1.82 mg/m^3. This reduction in air concentrations of machining fluid aerosols is attributed to the implementation of plant control measures such as local exhaust ventilation, general exhaust ventilation, air cleaning, enclosure of the cutting tools, and increased use of water-based machining fluids.

TABLE 9.2 Additives to Mineral Oil Machining Fluids

Lubricity additives
Extreme pressure additives
Antioxidants
Viscosity index improvers
Pour point depressants
Antimist additives
Tackiness additives
Corrosion inhibitors
Metal passivators
Scourability additives
Dyes, scents, reodorants
Antifoam additives

Source: Adapted from Ruane (1989b).

TABLE 9.3 Load-Bearing Additives for Machining Fluids

- Lubricity additives
  - Natural fats
  - Fatty acids
  - Synthetic esters
  - Waxes
  - Metal soaps
- Extreme pressure additives
  - Sulfur-based additives
    - Flours of sulfur
    - Sulfurized fats and polysulfides if nonstaining required
  - Chlorine-based additives
    - Chlorinated paraffin waxes
    - Chlorinated fats, fatty esters, and fatty acids
    - Inhibitors to minimize release of hydrogen chloride
      - Organic epoxides
      - Phosphites
      - Petroleum sulfonates
      - Fatty amines
  - Sulfo-chlorinated materials
  - Sulfo-chlorinated mineral oils, fats esters, fatty acids
  - Phosphorous compounds
    - Organo or Organometallic phosphates
      - Phosphate esters including tripolyphosphate
      - Zinc dialkyl dithiophosphates
  - Overbased sodium and calcium
  - Petroleum sulfonates

Source: Adapted from Ruane (1989b).

In a Swedish study the average air concentration of machining fluid aerosol was approximately 2 mg/m^3 (Einarsson et al., 1979). In a general machine shop operation reviewed by NIOSH, the concentration of machining fluids in a series of 20 personal air samples ranged from 0.11 to 1.57 mg/m^3 with an arithmetic mean concentration of 0.38 mg/mg^3 (NIOSH, 1988). A variety of machine tools and all three types of machining fluids were in use. In a NIOSH Health Hazard Evaluation of a shop machining aluminum, the air concentrations of soluble oil mist ranged from 0.14 to 1.08 mg/m^3 (NIOSH, 1989a).

To inhibit corrosion and adjust pH, a mixture of ethanolamines (EA) including monoethanolamine (MEA), diethanolamine (DEA), and triethanolamine (TEA) are added to most machining fluids with the exception of straight mineral oils. The exposure of machinists to ethanolamine was investigated in another phase of the study of machining fluids sponsored by the UAW–GM National Joint Committee on Health and Safety (Kenyon et al., 1993). The bulk machining fluids were analyzed for all three ethanolamines; the air samples were analyzed only for triethanolamine since other ethanolamines were too volatile for high collection efficiency. The concentration of the three ethanolamines in the bulk samples were then compared to data in the manufacturer's Material Safety Data Sheet (MSDS). The

TABLE 9.4 Composition of Emulsified Oil Machining Fluids

- Base oil
  - Paraffinic or naphthenic solvent refined oils
- Emulsifiers
  - Petroleum sulfonates
  - Fatty acids soaps
  - Fatty amines
  - Sulfoamidocarboxylic acids
- Corrosion inhibitors
  - Alkanolamines (e.g., triethanolamine)
  - Carboxylic acids
  - Mercaptobenzylthiozides
  - Borate esters
- Biocides
  - Phenol types (e.g., ortho phenyl phenol)
  - Formaldehyde release types
  - Hexahydro-1,3,5 tris (2- hydroxy-ethyl)-s-triazine
  - Others including pyridinethiones
- Coupling agents
  - Alcohols
  - Glycols
  - Glycol ethers
- Foam control agents
  - Silicones
  - Water-insoluble waxes
  - Polyglycols
- Water conditioners
  - Phosphates
  - Borates
  - Carbonates

Source: Adapted from Ruane (1989b) and Woskie et al. (1994).

MSDSs provide data only on the total alkanolamines as a class and do not identify the specific ethanolamines and their concentration in the machining fluids. The authors state the MSDS data is of limited value since the toxicology of the ethanolamines vary. As an example, MEA is a more potent irritant than DEA and TEA. Also, since TLVs have been proposed by the ACGIH for TEA and DEA, bulk concentration data in the MSDS would be useful to the occupational health professional who is planning a monitoring program. The air concentrations of EA determined by personal monitoring by Kenyon et al. (1993) demonstrated significant differences depending on the machining fluid (Figure 9.4) and the content of ethanolamines in the bulk fluid (Figure 9.5). The authors reference previous reports citing the presence of *N*-nitrosodiethanolamine (NDELA) as an impurity in TEA. If present, NDELA and nitrite, also present in many machining fluids, will react to form nitrosodiethanolamine, a human carcinogen. In the UAW–GM study

TABLE 9.5 Composition of Synthetic Machining Fluids

Corrosion inhibitors
Amine-neutralized carbolic acid
Inorganic salts
Boron compounds
Dispersants
Polyacrylate
Maleic acid and olefin copolymers
Substituted polyamines
Wetting agents
Acetylene surfactants
Block copolymers
Biocides (identical to emulsion machining fluids)
Lubricants and extreme pressure additives (as in emulsion machining fluids)

there was no evidence of NDELA in the bulk fluid, so air sampling for nitrosodiethanolamine was not conducted.

One of the few studies of the properties of machining fluids in plant use for an extended work period was conducted on severely refined mineral oil containing a sulfurized-fat extreme pressure additive (Evans et al., 1989). A centralized machining fluids system with a capacity of 20,000 gal serviced a large number of automatic lathes machining mild steel. A principal goal of the study was to note changes in 4- to 6-ring polycyclic aromatic hydrocarbons (PCA) over the test period. The maintenance of the machining fluids system included periodic "topping off" with machining fluids as required and an annual "laundering" which included

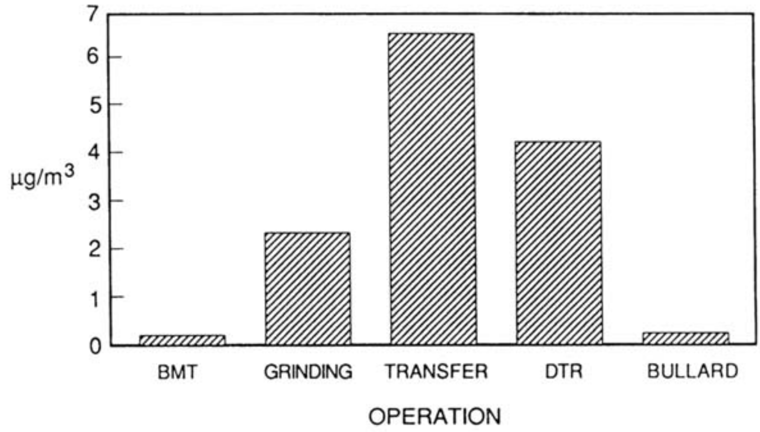

Figure 9.4 Air concentrations of triethanolamine as a function of machining operation where BMT is bore, mill and turn; Transfer is a multitool operation; DTR is drill, tap, and ream; and Bullard is vertical turret lathe. Source: Kenyon et al. (1993). Courtesy of the *American Industrial Hygiene Association Journal.*

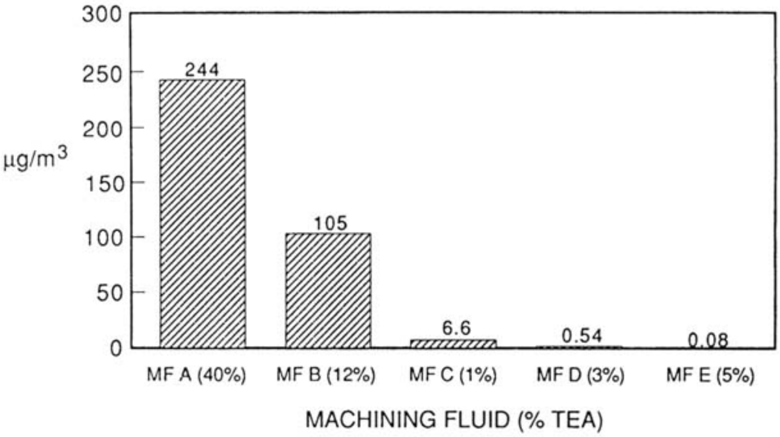

Figure 9.5 Air concentrations of triethanolamine for a multitool machining operation as a function of machining fluids where A, B and C are synthetic fluids, D is a semisynthetic fluid, and E is a soluble oil. The figures in parentheses are the percentages of triethanolamine (w/w) in the bulk fluid. Source: Kenyon et al. (1993). Courtesy of the *American Industrial Hygiene Association Journal*.

the removal of water, sterilization at 110°C, removal of solids by pretreatment with subsequent filtration by plate and frame, and adjustment of viscosity with mineral oil. Approximately 38% of the volumetric capacity of the system was replaced annually by tramp lubricating oil leaking into the system and the addition of new oil. The authors found that the PCA buildup was not important, as illustrated by the B(a)P content of the oil. The PCA content of the oil mist mirrored the content of PCAs in the bulk oil with the exception that the more volatile PCAs (i.e., fluoranthene and pyrene) had a significantly higher content in the mist than in the bulk oil. Parallel studies of the sensitizing potential, irritancy, and skin carcinogenicity of the oil were negative over the five-year period.

Aerosol Size. In another phase of the UAW–GM study noted earlier, Woskie et al., (1994) conducted size selective sampling to provide a comprehensive review of machining fluid, aerosol-size distributions in a range of operations (Table 9.6). In a study of machining fluids aerosols in an automotive transmission plant, Chan et al. (1990) noted that large particles (greater than 8 μm AMMD) were generated by spraying and splashing of machining fluids and fine aerosols (0.1 to 1.0 μm AMMD) were produced at the cutting point due to shear forces and high temperature. The air concentrations and the respirable fraction of the mist are shown in Table 9.7. The investigators noted that bacteria were present in the aerosol size fraction greater than 2 μm while bacterium were not noted in the less than 1 μm size fraction generated at the cutting tool.

9.2.4.3 Health Effects.

The effects of machining fluids on workers has been of special interest to the occupational health community in England. A symposium

TABLE 9.6 Average Particle-Size Distributions in Various Machining Operations

Machining Operation Machining Fluid	Plant 1 MMD[a]	 GSD	Plant 2 MMD	 GSD	Plant 3 MMD	 GSD
Bore/Mill/Turn						
Without fluid	3.6	3.6	6.3	2.9		
Soluble fluid	4.7	3.2	5.9	3.6	8.2	2.7
Synthetic fluid			6.0	3.8		
Broach						
Soluble fluid					5.8	3.2
Drill/Tap/Ream						
Soluble fluid	4.2	3.6	7.3	2.9	6.1	3.1
Synthetic fluid			7.1	2.6		
Gear cutting						
Straight oil	3.9	2.4				
Grinding						
Straight oil					5.7	2.5
Soluble oil	6.4	2.4	7.1	3.7	6.5	2.2
Synthetic fluid			5.6	2.8		
Semisynthetic			4.4	2.5		
Lapping						
Lapping oil	5.5	2.6				
Screw machines						
Straight oil	3.8	3.4	7.3	2.9	7.7	2.9
Transfer machines						
Soluble fluid	4.9	2.7	7.8	2.9		
Synthetic Fluid			6.1	2.4		
Semisynthetic			5.6	2.6		
Soluble fluid area	4.6	3.5				
Assemblers						
No fluid exposure	6.1	4.4	5.5	5.0	1.6	4.3

Source: Adapted from Woskie et al. (1994).

[a] The mass median diameter (MMD) and geometric standard deviation (GSD) were estimated visually from log-probability plots of the average mass on each stage of the personal impactors (see text).

on this subject sponsored by the Institute of Occupational Health at the University of Birmingham in 1989 is extensively cited in this section.

Dermatitis. The majority of occupational dermatitis in machinists is due to water-based machining fluids, that is, both emulsified oil and synthetic machining fluid. Although there is agreement on that point, opinion is divided on the identity of the causal agent. Rycroft (1989) states that the irritant emulsifiers are the principal cause. Ruane (1989a), however, believes that the high pH of machining fluids is the principal cause. In addition to these two mechanisms, which together do account for the majority of cases (70–80%), sensitization may account for the balance (20–30%). The principal causal agents for sensitization include formaldehyde and the formaldehyde-containing release agents which are frequently the active agents,

TABLE 9.7 Total and Respirable Mass Concentrations in Machining Operations

Production Area	Type Fluid	Total concentration (mg/m^3)	Percent Respirable
Salvage area	Straight oil	2.99±1.95	25.7
Machining aluminum	Soluble oil	2.55±1.71	19.2
Machining steel	Synthetic	0.83±0.24	40.7
	Semisynthetic	0.71±0.22	55.3
	Straight oil	0.73±0.47	50.2
Grinding steel	Synthetic	0.60±0.21	44.7

Source: Adapted from Chan et al. (1990).

in the biocide. In addition, rosin used as a base for the emulsifier and leachates of chromium, nickel, and cobalt from alloy steels may cause sensitization.

The rare case of dermatitis from mineral oil based machining fluids is usually folliculitis or oil acne, which is easily resolved by hygienic measures. Occasionally, sensitization is noted in machinists working with oil-based materials. Rycroft (1989) cites sensitization in a worker exposed to dipene in a honing oil formulation and in a second case the sensitizer was an epoxide introduced in the machining fluid formulation to scavenge chloride ions released from chloroparaffins, an extreme pressure additive in the machining fluid.

Rycroft (1989) ranks the three major types of machining fluids in descending order of potential for dermatitis as synthetics, emulsified oil, and finally mineral oil; for skin cancer the ranking is mineral oil, emulsified oil, and synthetic machining fluid.

Respiratory Effects. In the 1970s and 1980s studies of respiratory cancer in workers with exposure to machining fluids showed inconsistent results. As noted earlier, Eisen et al. (1994) demonstrated a twofold excess of cancer of the larynx in machinists in the automotive industry. Although a few cases of lipoid pneumonia have been attributed to machining fluids exposure, Burge (1989) does not believe it is a problem at the current exposure range of 1–2 mg/m^3. Burge does feel that machinists are at risk for bronchitis and that occupational asthma is initiated by sensitization to the machining fluids aerosol. Finally, it is generally accepted that exposure to mineral oil based machining fluids mist does not cause fibrotic changes in the lung.

Microbial Contamination. Emulsified oil and synthetic machining fluids provide the necessary water, nutrients, and temperature conditions for the growth of microorganisms. The organisms include aerobic bacteria, which cause a drop in the pH of the machining fluids, and anaerobic bacteria, including sulfate-reducing bacteria which produce sulfides such as hydrogen sulfide, yeast, and fungus (Weaver, 1989). The benchmark concentrations of microorganisms in machining fluids cited by Hill (1989) include concentrations of 50×10^3 colony-forming units (CFU) per milliliter for systems with exceptional control programs, 10^6 CFU/per ml for a reasonably achievable control program, and as high as 10^9 CFU/ml for a poor control program.

Although fecal and urinary pathogens may be present in the machining fluids, disease from this source has not been documented (Hill, 1989). Skin pathogens are not viable in machining fluids. *Pseudomonas Aeroginosa* is an opportunistic pathogen present in high concentrations in water-based machining fluids. This bacterium is a potent producer of endotoxin; it also produces keratinolase, an enzyme that softens the skin and may promote dermatitis. The presence of high concentrations of endotoxin arising from microbial growth is an issue of great concern to many investigators and studies are now under way to document the potential respiratory effects of such exposure (Rietschel and Brade, 1992).

9.2.5 Control of Exposures to Machining Fluids

9.2.5.1 Machine Design. The systems handling the machining fluids in a machine shop are of two types. In small shops the machine tools have independent fluid systems. The machining fluids flow over the cutting tool from an adjustable nozzle, drain to a collecting pan, and then flow to a sump with a volume of 5–50 gallons. The chips are removed manually by the operator. An integral pump returns the machining fluids from the sump to the application nozzle. Because of the small capacity of this system, contaminants build up quickly and system maintenance is critical.

In large facilities machining similar materials and using common machining fluids, all machine tools are supplied by a central system, frequently as large as 20,000 gal. An automatic conveyor or chip drag clears the chips. The machining fluids are pumped from a large reservoir to the individual tools where they flow over the cutting point and return to the machine tool sump for pumped return to a trench where they flow to the central reservoir. The large volume of these systems evens out heavy load time and protects the quality of the machining fluids (Cookson, 1971).

Mechanical splash guards are designed to keep the chips and fluid inside the machine enclosure. The general approach is the use of overlapping, drip-proof shields. To maintain their effectiveness, the guards must be robust and rigidly supported. If access is required, the guards should be designed to slide; removable guards are not recommended. If visual monitoring of the machine function is required, a clear view shield is appropriate. It is obvious that effective control of machining fluid mist can best be obtained with total enclosures provided with local exhaust ventilation.

The generation of machining fluid mist can be minimized by maintaining low temperatures at the cutting point by increasing the machining fluid flow rates. In an example of this control cited by Lee (1989), the mist concentration was reduced from 67 to 0.4 mg/m^3 by this simple change. The machine tool and the associated machining fluid system must be designed to handle these high flow rates. The machine tool should also be designed for ease of access to the sump for cleaning. The use of “through the tool” machining fluid systems may result in excessive mist generation. If a chip conveyor is installed on high-production machine tools, it should be designed for ease of cleaning.

9.2.5.2 *Machining Fluid Design.* The amount of emulsifier in water-based machining fluid formulations should be minimized since these agents are common skin irritants. The formulations should also be designed to control alkalinity; systems that run at high pH will cause defatting and respiratory irritation.

After discovering that cutting fluids containing both nitrates and amines could result in the generation of various carcinogenic nitrosamines, NIOSH issued an Intelligence Bulletin and initiated a field study of exposure to cutting fluid mists (NIOSH, 1978).

9.2.5.3 *Personal Protective Equipment.* The following recommendations by Rycroft (1989) reflect the wide experience and common sense of this occupational dermatologist:

> With regard to protective clothing, plastic over-sleeves can sometimes be helpful. Their materials and design could probably be improved. Gloves are often unusable for safety reasons but, when they can be used, their materials and design also requires attention. Barrier cream does not seem to help a great deal, probably because water-based cutting fluids tend to remove them. Sensitization by lanolin in barrier cream very rarely occurs. After-work skin conditioning cream does seem to help but achieving usage of after-work creams is often difficult. The choice of skin cleansers needs to be a balance between effectiveness and their adverse effect on the skin.

9.2.5.4 *Work Practice.* The ultimate control approach for mist control is the elimination of the machining fluid. Currently some shops conduct dry machining on cast iron, nodular iron, and steel. Machine tool manufacturers are now considering this technique for other metals. The machine tool cutting and grinding operations should be conducted at the lowest speed compatible with production and quality to minimize the generation of mist. The higher the speed, the greater is the mist generation, especially in grinding. A written machining fluids management program is necessary to ensure that properly designed fluids are used in the manner prescribed by the manufacturer (Ruane, 1989b).

The installed safeguards including splash guards should be routinely utilized by the machinist. The dilution rate of the machining fluid concentrate recommended by the manufacturer should be followed rigorously. Special attention must be given so that the correct amount of biocide is added to the machine—overdosing is a frequent error in machine shops.

A comprehensive series of recommendations on machining fluid health and safety was presented in a Health Hazard Evaluation Report (NIOSH, 1989b). An excellent pamphlet on lubricating and machining fluid oils, prepared by Esso (1979), outlines a recommended procedure to minimize exposure to cutting fluids. The following selected material is quoted:

> 1. Avoid all unnecessary contact with mineral or synthetic machining fluids. Minimize contact by using splash guards, protective gloves and protective aprons, etc. Use goggles or face visors when handling soluble oil concentrate. The golden rule is: don't wear oil-soaked clothing and never put oil rags into pockets.

2. Encourage workers to wear clean work clothes, since oil-soaked clothing may hold the oil in contact with the skin longer than would otherwise occur. This applies particularly to underclothes, which should be changed frequently and washed thoroughly before re-use. Consider the provision of one locker for work clothes and a separate one for street clothes.

3. Consider the use of short-sleeved overalls rather than long-sleeved garments for workers handling metalworking fluids when friction on the skin from cuffs saturated in oil can promote skin problems.

4. Removal of oil from the skin as soon as possible if contact does occur. This means the installation of easily accessible wash basins and the provision of mild soap and clean towels in adequate supply. Avoid strong soaps and detergents, and abrasive-type skin cleaners.

5. Encourage workers to take showers at the end of a day's work in order to remove all traces of oil from the skin.

6. Do not allow solvents to be used for cleansing the skin. Use only warn water, mild soap and a soft brush or in combination with a mild proprietary skin cleanser.

7. Encourage the use of a skin reconditioning cream at the end of the shift, after washing hands. These products help to replace the natural fats and oils removed from the skin by exposure to oils and by washing, and are a very important part of a skin conservation programme.

8. Encourage the use of barrier cream before starting work, and also after each time hands are washed. The barrier creams of choice vary with different oils, so ensure that the correct one is used.

9. Avoid unnecessary exposure of workers to oil mist or vapours. In any event, ensure that breathing zone levels of oil mist are well below the recommended permissible concentration of 5 milligrams/cubic metre air.

10. See that all cuts and scratches receive prompt medical attention.

11. Prevent contamination of all oils particularly the soluble oils, and minimize the use of biocides. Ensure that soluble oils are used only at the recommended dilution ratios.

12. Programme the regular cleaning of coolants systems.

13. Obey any special instructions on product labels. In common with most other industries, the petroleum industry is increasing its use of precautionary labelling.

14. Use correct work technique—particularly for soluble oil concentrates which may irritate skin and eyes. Handling concentrate and preparing dilutions requires careful precautionary measures: the use of goggles or a face-visor, impervious gloves, etc. Use warning notices, placards, etc., to draw attention to the need for good occupational disease personal hygiene and good occupational disease work practices.

9.2.5.5 Ventilation. The exhaust hoods commonly used to capture toxic metal dusts from machining include conventional exterior hoods, high-velocity–low-volume capture hoods, and enclosures (ACGIH, 1992). It is widely understood that

TABLE 9.8 Effects of Engineering Controls on the Air Concentration of Machining Fluid Mist

			Concentration (mg/m^3)[a]						
			Before Controls			After Controls			Mean Ratio
Operation	Controls	No. of Machines	AM	ASD	N	AM	ASD	N	Before/After
Grinding	Enclosures + local exhaust	5	6.75	1.69	8	1.88	0.91	12	4.90
	Enclosures	1	10.80	2.82	3	1.02	0.48	6	10.60
	General air cleaners	1	5.10	0.78	3	3.40	1.20	8	1.50
Machining	Enclosures + local exhaust	4	4.45	1.34	15	0.91	0.42	15	4.89
	General air cleaners	2	5.18	0.91	2	2.95	0.82	4	1.86

Source: Adapted from Hallock et al. (1994).

[a] Values presented are mg/m^3 machining fluid aerosol. AM = arithmetic mean. ASD = arithmetic standard deviation. N = number of air samples. Mean ratio of before and after control values is calculated from ratios of individual machines.

all machining operations on beryllium metal require local exhaust ventilation to control airborne dust. Less well understood is the level of control required for machining of copper -beryllium alloys available with beryllium content of 0.4–4.0%. It is accepted that grinding of all beryllium alloys does require local exhaust ventilation. A group of hood enclosures have been designed for beryllium fabrication shops.

The application of machining fluids under conditions of high load may result in airborne machining fluids mist concentrations that exceed 1 mg/m^3. In this case the application of general or local exhaust ventilation should be considered. In high-production shops general exhaust is commonly used with air cleaning and recirculation of air. This approach requires monitoring of the system to ensure that conditions are acceptable for recirculation (ACGIH, 1992). The most effective approach to control machining fluid aerosols is local exhaust based on partial or full enclosing hoods. The impact of engineering controls on machining fluid aerosols is shown in Table 9.8 (Hallock et al., 1994).

When NC or CNC systems are used for precision machining of elaborate workpieces, it is common practice to initially "proof" the machine tape and the machine tool setup by machining the part from a styrene, urethane, or epoxy proofing board. Frequently several runs will be made with the proofing board to quickly and inexpensively establish that the machine tool will accept the taped function and machine the part to the required dimensions. Control of the dust from these operations is necessary for housekeeping, fire protection, and worker health. The normal dust control in a small shop utilizes an industrial vacuum cleaner with the pickup positioned next to the cutting tool. A more effective method is available based on a cutting tool with a hollow shank and a slotted cutting area for straight-through exhaust using a high-velocity, low air volume system (LeTarte, 1985).

9.3 ELECTROCHEMICAL MACHINING (ECM)

The ECM process is almost a mirror image of a conventional electroplating process. In electroplating, metal is deposited on the workpiece (cathode) from a solid piece of plating stock (anode) utilizing a dc electrolytic bath operating at low voltage and high current density. In the ECM process shown in Figure 9.6, the workpiece is the anode. The cutting tool, or cathode, is machined to reflect the geometry of the hole to be cut in the workpiece. Electrolyte is pumped through the space between the tool and the workpiece. As the dc current flows, metal ions are removed from the workpiece and swept away by the electrolyte. Rather than depositing on the tool (cathode), the metal particles react with the electrolyte, usually an aqueous solution of sodium chloride, sodium nitrate, and other salts to form insoluble hydroxides that deposit out as a sludge. The tool is fed into the workpiece to complete the cut. Since the ECM method is fast, produces an excellent surface finish, does not produce burrs, and causes little tool wear, it is widely used for cutting irregularly shaped holes in hard, tough metals. Special-purpose equipment is available for electrochemical grinding and drilling of small holes.

In this operation the electrolyte is dissociated, hydrogen is released at the cathode, and misting results at the bath surface in the manner described in Chapter 13. The magnitude of this problem depends on the bath composition and the power density. Local exhaust ventilation must be provided to ensure that hydrogen concentrations do not approach the lower flammability limit and to remove the mist. The equipment, which normally operates at low dc voltage and high current, does not normally present an electrical hazard. Skin contact with the bath contents must be controlled by work practices and personal protective equipment.

9.4 ELECTRICAL DISCHARGE MACHINING (EDM)

A spark-gap technique is the basis for this procedure, which is a popular machining technique for large precise work such as die sinking or the drilling of small holes in complex parts. In the system shown in Figure 9.7, a graphite tool has been machined to the precise size and shape of the hole to be cut. The workpiece (anode) and the tool (cathode) are immersed in a dielectric oil bath and are powered by a low-voltage dc power supply (up to 300 V). The voltage across the gap increases until breakdown occurs and there is a spark discharge across the gap that produces

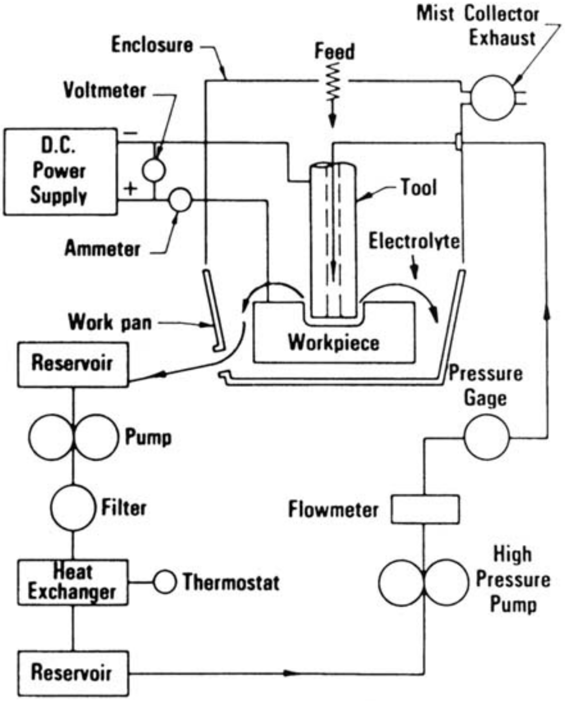

Figure 9.6 Electrochemical machining. (Courtesy of Chemform Division of KMS Industries)

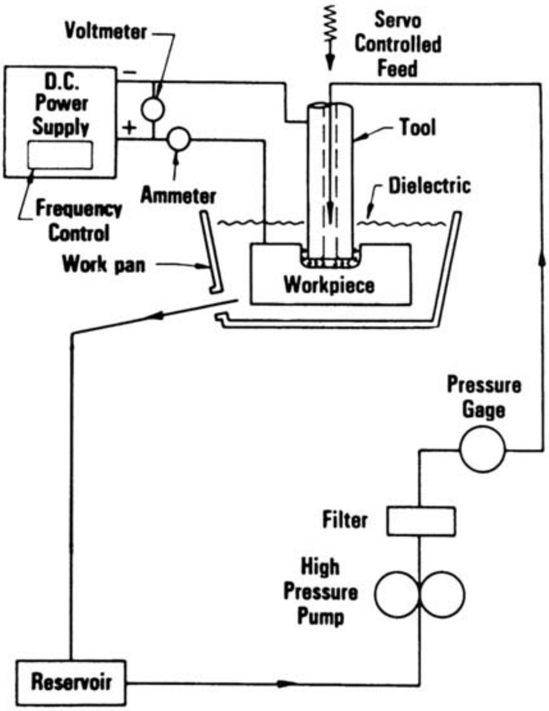

Figure 9.7 Electrical discharge machining. (Courtesy of Chemform Division of KMS Industries)

a high temperature at the discharge point. This spark erodes a small quantity of the metal from the workpiece. The cycle is repeated at a frequency of 200–500 Hz with rather slow, accurate cutting of the workpiece.

The hazards from this process are associated with the dielectric oil. In light cutting jobs, a petroleum distillate such as Stoddard solvent is commonly used, while in large work, a mineral oil is the dielectric. The dielectric oil is pyrolyzed at the discharge point forming hydrogen, methane, carbon monoxide, and a number of other gases. These gases are released at the surface of the bath, generating a mist. The gases and mist are controlled by local exhaust ventilation using a partially enclosing hood. The oil gradually becomes contaminated with small hollow spheres of metal eroded from the part. As in the case of conventional machining, these metals may dissolve in the oil and present a dermatitis problem. An ultrahigh-efficiency filter should be placed in the oil recirculating line to remove metal particles.

Lindstedt and Sollenberg (1982) state that B(a)P is formed in the oil bath of EDM equipment. Fresh oil added to an EDM machine did not contain benz(a) pyrene B(a)P; however, after 16 and 20 weeks of work, the bath oil contained 136 and 149 μg/L of B(a)P. Air samples taken directly over a bath equipped with good ventilation showed a maximum concentration of 9.1 μg/m^3. Personal air samples taken from the operators did not contain detectable amounts. The authors recommend that all systems be equipped with local exhaust ventilation and that operators avoid skin contact with the oil. In a single study on an EDM unit equipped with marginal ventilation, I observed carbon monoxide concentrations exceeding 35 ppm.

9.5 HARD METAL TOOL AND CUTTER GRINDING

9.5.1 Manufacturing Process

The cutting tools used in metal machining must have a hardness that will permit penetration of the workpiece, strength to withstand mechanical shock, and the ability to run at high temperatures with and without machining fluid while maintaining their sharpness, that is, exhibiting minimal wear. One of the most common materials used in cutting tools is based on a blend of metal carbides with a cobalt binder. The principal components and the average content include tungsten carbide (80%), other metallic carbides (e.g., tantalum, chromium, niobium, and titanium) (10%), and the cobalt binder (10%). For certain applications nickel may be used in place of cobalt as the binder. The most common tungsten carbide products are tool inserts which are clamped or brazed in place on the toolholder (Figure 9.1). The manufacturing process for inserts shown in Figure 9.8 starts with the preparation of the powder (Meyer-Bisch et al., 1989). The ground and sized tungsten carbide powder is coated with paraffin wax, dried, and pressed into the desired shape. The weighing and blending steps present the greatest potential for exposure; the routine control measures include work stations equipped with local exhaust ventilation, although there is now a move to enclose the powder handling operations. The preshaped parts may undergo additional forming using grinding or cutoff operations before they are presintered at 800°C. The presintering operation vaporizes the wax and forms the insert into a rigid shape with the consistency of chalk. The parts are baked in an oxygen-free oven at 1500°C to fuse the cobalt; final grinding is done on manual or automatic grinders using diamond tools. Inserts may be abrasive blasted and coated using a chemical vapor deposition technique in an enclosed vessel using aluminum trioxide, titanium tetraoxide, or zirconium dioxide The parts are then brazed in position on the tool holders. In an alternate process for large tungsten carbide components, blocks are formed from powder in a hot isostatic press as shown in the left process flow stream in Figure 9.8. The principal exposures to cobalt occur during weighing and mixing of the powders prior to sintering, the cutting and grinding of the inserts after presintering, and the grinding after sintering.

9.5.2 Exposure Data

Kaponen et al. (1982) reviewed cobalt in air data from five studies over the period 1947–1978. However, the authors state that the data may be in error owing to the difficulties involved in performing concurrent analyses of tungsten and cobalt in that time period. Later studies provided more substantial data. Kusaka et al. (1992), noting that concurrent cobalt and nickel air concentrations were not avail-

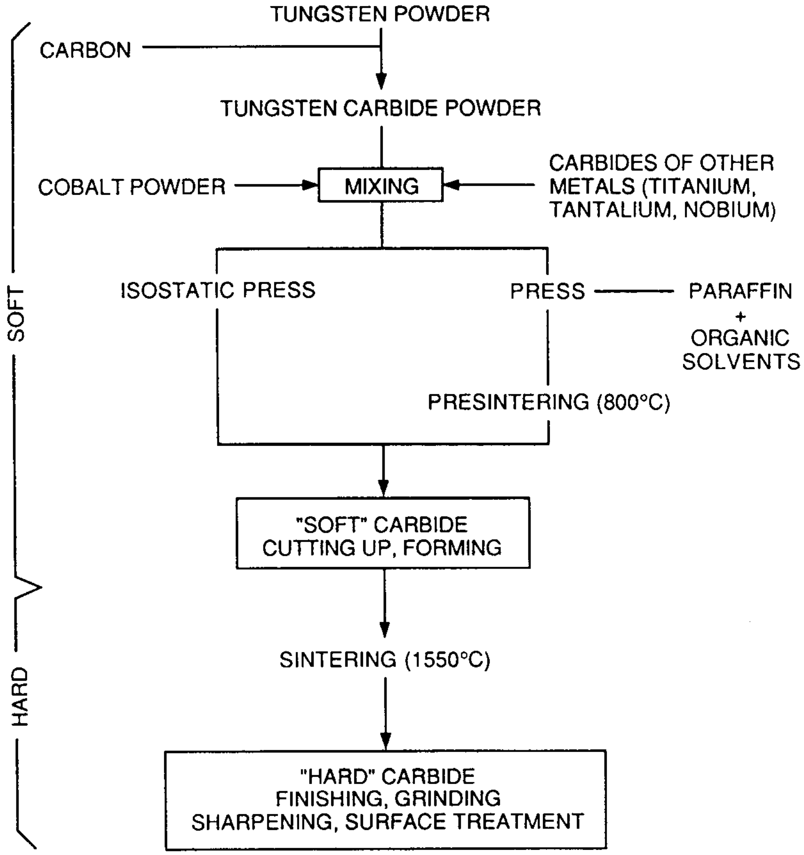

Figure 9.8 Hard metal production process. Source: Meyer-Bisch et al. (1989). Reprinted with permission of BMJ Publishing Group.

able, completed an extensive sampling program in a hard metal plant based on personal air sampling on 23 workers for five consecutive weeks (Table 9.9). These data indicate that cobalt is the more serious problem, based on the fraction of the samples that exceeded the TLVs for the two contaminants. Kusaka also determined the geometric mean particle size of the hard metal dust to be 2.8 μM, with a geometric standard deviation of 4.0. Lichtenstein et al. (1975) demonstrated that unless effective local exhaust ventilation is used on grinding operations, the workers' exposures to cobalt will exceed the ACGIH TLV of 50 $\mu g/m^3$.

A comprehensive study of workers' exposure at a tungsten carbide facility was conducted by NIOSH at the request of the plant union (NIOSH, 1988a). Personal air samples for cobalt were taken on the workers with the greatest potential for exposure. A total of 28 workers were followed for 3 consecutive days. The TWA total dust concentrations for cobalt ranged from not detectable to 145 $\mu g/m^3$. Of the total of 84 samples, 5 exceeded the TLV of 50 $\mu g/m^3$. In a matching medical study, the

TABLE 9.9 Air Concentrations of Cobalt and Nickel in Hard-Metal Grinding

Metal	Samples (%)	Concentration Range ($\mu g/m^3$)
Cobalt	65.4	1–25
	18.0	25–50
	12.0	Greater than 50
Nickel	45.9	Less than 1.0
	49.6	1–25
	1.5	Greater than 50

Source: Adapted from Kusaka et al., 1992.

increase noted in urine concentrations of cobalt from pre- to postshift measurements was found to be significant and correlated with workplace exposures as defined by air sampling. Chest X rays were negative for occupational pneumonoconiosis.

In a study of cobalt exposures at a facility repairing and sharpening tungsten carbide tools using dry and wet grinding of inserts, the respirable cobalt dust concentrations ranged from nondetectible to 4 $\mu g/m^3$. Nickel concentrations ranged from nondetectible to 20 $\mu g/m^3$ TWA (NIOSH, 1988b). Chromium was detected in only one sample at a concentration of 5 $\mu g/m^3$ TWA.

Einarsson et al. (1979) state that the majority of cobalt removed from the cutter blanks will be in solution in the grinding fluid; the highest concentration of cobalt in the fluid in this study was 552 $\mu g/mg$. Air concentrations were less than 0.02 $\mu g/m^3$. In reviewing conditions in a facility grinding hard metal, Ruane (1989a) found that machining fluids system operating with emulsified oil had cobalt concentrations in excess of 800 ppm; Ruane states that the lowest concentration achievable is in the range of 50 ppm.

9.5.3 Health Effects

A series of papers has attributed progressive interstitial pulmonary fibrosis in grinding room personnel exposed to airborne cobalt in excess of the TLV of 50 $\mu g/m^3$. Sprince (1992) found a decrement in pulmonary function in workers doing both wet and dry grinding of tungsten carbide tools when compared to a group of workers exposed to tungsten carbide, but who had not done grinding. The authors suggest that the toxicity of cobalt is enhanced by an unknown exposure element specific to the grinding process. The occurrence of asthma in hard metal workers is felt to be due to true sensitization to cobalt.

9.6 LASER AND WATERJET CUTTING

Two new processes for metal cutting are now appearing on the machine shop floor—laser and waterjet cutting. Both techniques are being evaluated for numerical control systems since they can cut a variety of metals and plastics at a high rate with minimum kerf (cut width) and low distortion. The laser systems use a Nd:YAG laser for copper, brass, and aluminum and a CO_2 laser for steel and other alloys (see Chapter 10). The power of the CO_2 systems ranges from several hundred watts to several kilowatts and can cut up to 0.5-in. thick mild steel at cutting speeds of 20 in./min. The hazards in these systems include the laser itself and the fume produced by the evaporation of the base metal. The fume must be controlled by effective local exhaust ventilation, which is degraded when air or oxygen is used to blow away the molten metal. The provisions of ANSI Z136.1 on laser safety should be rigorously followed in designing the laser cutting workplace.

The second system, waterjet cutting, has approximately the same application in metal machining as does the laser system. Water pressures up to 65,000 psig are achieved by a booster pump feeding a hydraulically driven, small-bore piston pump. The high-pressure water stream is directed through a sapphire nozzle with an opening diameter 0.005–0.002 in. This pure water will easily cut plastic, but in order to cut metals, abrasives such as garnet, aluminum oxide, or silicon carbide are introduced into the stream. The abrasive stream will cut 1-in. thick mild steel at 8 in./min. with a pressure of 30,000 psig. The principal hazards are contact of the worker with the stream. Three feet from the nozzle the stream is erosive and will cause serious injury; at the nozzle, it will amputate limbs, and indeed, the waterjet system is used in a number of surgical procedures.

REFERENCES

Adams, R. M. (1983), *Occupational Dermatitis*, Grune and Stratton, New York.

ACGIH (1992), *Industrial Ventilation—A Manual of Recommended Practice*, 21st. ed., Committee on Industrial Ventilation, American Conference of Governmental Industrial Hygienists, Cincinnati, OH.

ANSI (1986), *American National Standards for the Safe Use of Lasers*, ANSI Z136.1, American National Standards Institute, New York.

Burge, P. S. (1989), *Proceedings of a Conference on the Health Effects of Cutting Oils and Their Controls*, April 28 and 29, 1989, University of Birmingham, England, pp. 13–28.

Chan, T. L., D'Arcy, J. B., and Siak, J. (1990), *Appl. Occup. Environ. Hyg.*, **5**, 162–170.

Cookson, J. O. (1971), *Ann. Occup. Hyg.*, **14**, 181–193.

Decoulfe, P. (1978), *J. Natl Cancer Inst.*, **61**, 1025–1030.

Einarsson, O., Eriksson, E., Lindstedt, G., and Wahlberg, J. E. (1979), *Contact Dermatitis*, **5**, 129–132.

Eisen, E., Tolbert, P. E., Hallock, M. F., Monson, R. R., Smith, T. J., and Woskie, S.R. (1994), *Am. J. Ind. Med.*, In press.

Evans, M. J., Hooper, W. A., Ingram, A. J., Pullen, D. C., and Aston, R. H. R. (1989), *Ann. Occup. Hyg.*, **33**, 537–553.

Esso (1979), *This Is About Health, Esso Lubricating Oils and Cutting Fluids,* Esso Petroleum Company, Ltd. Oxford, U.K.

Hallock, M., Smith, T. J., Woskie, S. R., Hammond, S. K., (1994), *Am. J. Ind. Med.*, In press.

Hill, E.C. (1989), *Proceedings of a Conference on the Health Effects of Cutting Oils and Their Controls*, April 28 and 29, 1989, University of Birmingham, England, pp. 29–30.

IARC (1987), *Mineral Oils*, Vol. 33, International Agency for Research on Cancer, pp. 87–168.

Jarvholm, B., Bake, B., Lavenius B., Thiringer, G., and Vokmann, R. (1982), *J., Occup. Med.*, **24**, 473–479.

Kaponen, M., Gustafsson, T., Kalliomaki, P. L., Lalliomaki, K. and Moilanen, M. (1981), *Ann. Occup. Hyg.*, **24**, 191–204.

Kaponen, M., Gustafsson, T., and Kalliomaki, P. L. (1982), *Am. Ind. Hyg. Assoc. J.* **43**, 645–651.

Kennedy, S. M., Greaves, I. A., Kriebel, D., Eisen, E. A., Smith, T. J., and Woskie, S. R. (1989), *Am. J. Ind. Med.*, **15**, 627–641.

Kenyon, E. M., Hammond, S. K., Shatkin, J., Woskie, S. R., Halliock, M. F., and Smith, T. J. (1993), *Appl. Occup. Environ. Hyg.*, **8**, 655–661.

Kusaka, Y., Kumagai, S., Kyono, H., Kohyama, N., and Shirakawa, T. (1992), *Am. Ind. Hyg. Assoc. J.*, **36**, 497–507.

LaTarte Co., (1985), Vac-U-Mill 360, Product Bulletin, LeTarte Co. Smiths Creek, MI., 1985.

Lee, G. (1989), *Proceedings of a Conference on the Health Effects of Cutting Oils and Their Controls*, April 28 and 29, 1989, University of Birmingham, England, pp. 51–56.

Lichtenstein, M., Bartl, F., and Pierce, R.T. (1975), *Am. Ind. Hyg. Assoc. J.*, **36**, 879–885.

Lindstedt, G. and Sollenberg, J. (1982), *Scand. J. Work Environ. Health.*, **8**, 1–19.

McGeough, J. A. (1974), *Principles of Electrochemical Machining*, Chapman and Hall, London.

Meyer-Bisch, C., Pham, Q. T., Mur, J. M., Massin, N., Moulin, J. J., Teculescu, D., Carton, B., Pierre, F., and Baruthio, F. (1989), *Brit. J. Ind. Med.*, **46**, 302–309.

NIOSH (1978), Guidelines for the Control of Exposure to Metalworking Fluids, NIOSH Publ. No. 78-165, National Institute for Safety and Health, Cincinnati, OH.

NIOSH (1988a), Health Hazard Evaluation Report, HETA 85-295–1907, National Institute for Occupational Safety and Health, Cincinnati, OH.

NIOSH (1988b), Health Hazard Evaluation Report, HETA 85-423-1904, National Institute for Occupational Safety and Health, Cincinnati, OH.

NIOSH (1988c), Health Hazard Evaluation Report, HETA 85-510-1937, National Institute for Occupational Safety and Health, Cincinnati, OH.

NIOSH (1989a), Health Hazard Evaluation Report, HETA 88-268-L1980, National Institute for Occupational Safety and Health, Cincinnati, OH.

NIOSH (1989b), Health Hazard Evaluation Report, HETA 87-092-1967, National Institute for Occupational Safety and Health, Cincinnati, OH.

Rietschel, E. T. and Brade, H. (1992), *Sci. Am.*, August, 54–61.

Ruane, P. J. (1989a), *Proceedings of a Conference on the Health Effects of Cutting Oils and Their Controls*, April 28 and 29, University of Birmingham, England, pp. 5–12.

Ruane, P. J. (1989b), *Proceedings of a Conference on the Health Effects of Cutting Oils and Their Controls*, April 28 and 29, 1989, University of Birmingham, England, pp 57–69.

Rycroft, R. J. G. (1989), *Proceedings of a Conference on the Health Effects of Cutting Oils and Their Controls*, April 28 and 29, 1989, University of Birmingham, England, pp. 31–35.

Southam, A. (1928), *Report on The International Conference on Cancer*, Bristol, John Wright, p. 280.

Sprince, N. L. (1992), in *Environmental and Occupational Medicine*, 2nd ed., W. N. Rom, Ed., Little Brown and Company, Boston, MA, pp. 791–798.

Vena, J. E., Sultz, H. A., Fiedler, R. C., and Barnes, R. E. (1985), *Brit. J. Ind. Med.*, **42**, 85–93.

Weaver, R.B. (1989), *Proceedings of a Conference on the Health Effects of Cutting Oils and Their Controls*, April 28 and 29, 1989, University of Birmingham, England, pp. 57–69.

Woskie, S. R., Hammond, S. K., Rosenthal, F., Hallock, M. F., and Smith, T. J. (1987), *Use of Stacked Filter Samplers to Estimate Coolant Aerosol Exposures*, presented at the American Industrial Hygiene Conference, Montreal, Canada.

Woskie, S. R., Smith, T. J. Hallock., M. F., Hammond, S. K., Rosenthal, F., Eisen, E.A., Kriebel, D., and Greaves, I.A. (1994), *Am. Ind. Hyg. Assoc. J.*, **55**, 20–29.

CHAPTER 10

Welding

10.1 INTRODUCTION

10.1 INTRODUCTION

Welding is a process for joining metals in which coalescence is produced by heating the metals to a suitable temperature. In the United States it is estimated that there are 185,000 welders, brazers, and cutters with an additional 700,000 workers who do some welding as a part of their job. Although current data on the distribution of welding processes are not available in the United States, Ulfvarson (1981) gave the distribution in Sweden as 58% shielded metal arc welding, 20% metal inert gas welding and metal active gas, 10% tungsten inert gas welding, 9% gas welding, and 3% submerged welding. The distribution by metal welded in Sweden is 64% mild steel, 22% stainless steel, 9% aluminum, and 5% all other metals. In the United States there is probably less inert gas shielded arc welding and less stainless steel work than in Sweden. Stern (1983) states that shielded metal arc welding, metal inert gas welding, and tungsten inert gas welding on mild steel and stainless steel coupled with metal inert gas welding on aluminum accounts for 80% of all welding done in the world.

Welding processes can be classed as pressure, nonpressure, or brazing. The nonpressure welding techniques warrant major attention because they involve the fusing or melting together of metals. The American Welding Society (AWS) lists 80 welding processes in general industrial use. A series of 10 common welding techniques are chosen for discussion in this chapter based on their widespread use and the potential for significant exposure to the welder. A large number of processes, including compression, ultrasonic, friction, percussion, thermit, electron beam, and explosive welding, are not covered either because they present limited potential for exposure or the hazards they present are similar to the processes described. Selected metal-cutting operations are included in this discussion since these techniques are similar to the welding procedures and have comparable health hazards. Two related processes, metal thermal spraying and soldering, are discussed in Chapters 14 and 22.

In the nonpressure welding techniques, metal is vaporized and then condenses to form a fume in the 0.01- to 0.1-μm particle size range that agglomerates rapidly. The sources of this respirable metal fume are the base metal, the metal coating on

TABLE 10.1 Potential Hazards of Welding[a]

	Welding Process						
Hazard	SMA[b]	Low Hydrogen	GTA[c]	GMA[d]	Submerged	Plasma	Gas
Metal fumes	M–H	M–H	L–M	M–H	L	H	L–M
Fluorides	L	H	L	L	M	L	L
Ozone	L	L	M	H	L	H	L
Nitrogen dioxide	L	L	M	M	L	H	H
Carbon monoxide	L	L	L	L, H if CO_2	L	L	M–H
Decomposition of chlorinated HC	L	L	M	M–H	L	H	L
Radiant energy	M	M	M–H	M–H	L	H	L
Noise	L	L	L	L	L	H	M

[a] Hazard codes: L, low; M, medium; H, high.
[b] Shielded metal arc welding.
[c] Gas tungsten arc.
[d] Gas metal arc.

the workpiece, the electrode, and the fluxing agents associated with the particular welding system. A range of gases and vapors including ozone and nitrogen dioxide may be generated depending on the welding process. The wavelength and intensity of the electromagnetic radiation emitted depend on the welding procedure, inert gas, and base metal.

The International Agency for Research on Cancer has classed welding fume in Group 2A, that is, possible carcinogenic to humans (IARC,1990). A number of studies have shown pulmonary disease in welders, including small airway disease, chronic bronchitis, and X-ray abnormalities. Reduced sperm quality in welders has also been found. The most common acute conditions seen in welders include pulmonary edema from gas welding in confined spaces, severe photokeratitis from UV exposure from viewing the welding arc without eye protection, and metal fume fever from welding and cutting copper- and zinc coated metals.

The common welding techniques reviewed assume that the welding is done on mild steel. The nature of the base metal is important in evaluating the metal fume exposure and occasionally it has impact in other areas. When such impact is important, it will be discussed. The information on potential hazards presented in the text is summarized in Table 10.1.

10.2 SHIELDED METAL ARC WELDING (SMA)*

10.2.1 Process

This most common nonpressure or fusion welding process is also commonly called stick or electrode welding (see Figure 10.1). An electric arc is drawn between a welding rod and the workpiece, melting the metal along a seam or a surface (Figure

---

*This is also known as Manual Metal Arc Welding (MMAW).

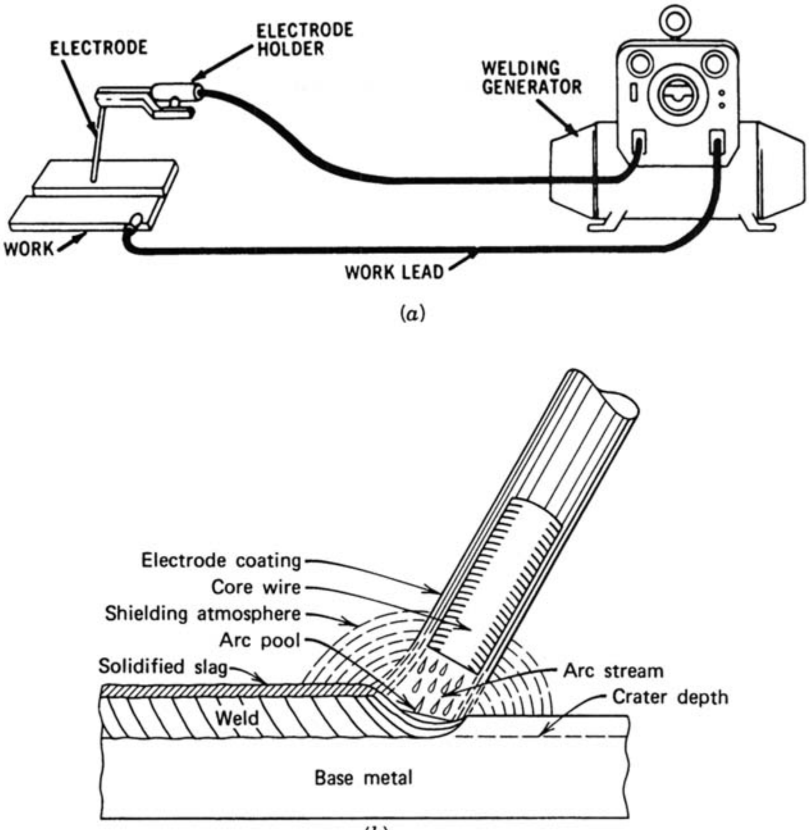

(a)

(b)

Figure 10.1 (a) Shielded metal arc welding (SMA) (Courtesy Hobart Brothers, Inc.). (b) Cross section of the arc area.

10.2). The molten metal from the workpiece and the electrode form a common puddle and cool to form the weld and its slag cover (Figure 10.1b). The slag formed over the weldment, made up of flux and impurities, is removed with a manual or pneumatic chipper. Power, dc or ac, is used in either straight (electrode negative, work positive) or reverse polarity. The most common technique involves dc voltages of 10–50 V and a wide range of current up to 2000 A. Although operating voltages are low, under certain conditions an electrical hazard may exist.

The welding rod or electrode may have significant occupational health implications. The electrode contains the same or similar metal alloy as the parent metal.The three principal electrode types are cellulosic (TiO_2, sand, and magnesium silicate), rutile (TiO_2, $CaCO_3$ plus some cellulose), and basic (high content of calcium carbonate or fluoride). Initially, a bare electrode was used to establish the arc and act as filler metal. Now the electrode covering may contain 20–30 organic and inorganic compounds and perform several functions. The bonding agent that holds the extruded material on the electrodes is water glass. The modern elec-

Figure 10.2 A welder striking an arc with a shielded electrode. The welder is wearing a helmet with a welding plate and appropriate protective clothing.

trode was developed by the 1930s. Asbestos was added to the electrodes until the 1950s. The principal function of the electrode coating is to release a shielding gas such as carbon dioxide to insure that air does not enter the arc puddle and thereby cause failure of the weld. The carbonates in the electrode coating are degraded thermally in the arc to form carbon dioxide. In addition, the covering stabilizes the arc, provides a flux and slag producer to remove oxygen from the weldment, adds alloying metal, and controls the viscosity of the metal.

A complete occupational health survey of shielded metal arc welding requires the identification of the rod and its covering. The range of compounds in the fume from coated electrodes is shown in Table 10.2. The composition of the electrode can be obtained from the AWS classification number stamped on the electrode, as shown in Figure 10.3.

The percent of total electrode mass that appears as airborne fume ranges from 0.5 to 5%. Pantucek (1971) states that the "fume" generated from coated electrodes may contain iron oxides, manganese oxide, fluorides, silicon dioxide, and compounds of titanium, nickel, chromium, molybdenum, vanadium, tungsten, copper, cobalt, lead, and zinc. The manganese content of welding fume ranges from 3 to 10%. Moreton and Jenkins (1984) state that the content of barium in welding fume from self-shielded, flux-coated electrodes made by one UK manufacturer ranges from 0.1 to 34%. Silicon dioxide is routinely reported as present in welding fume, apparently originating from the various silicon compounds in the electrode coating. Buck and Dessler (1967) state that the silicon dioxide is present in an amorphous form or as silicates, not in the crystalline form. The elements in concentra-

TABLE 10.2 Fume Composition (%) from Shielded Metal Arc Welding with Various Coated Electrodes

	Type of coated electrodes			
Chemical Substance	Basic Electrodes	Rutile Electrodes	Rutile High-Recovery Electrodes	Zirconium Basic Recovery Electrodes
K_2O	12–29.2	9.4–13	7–12.2	13.2–19.2
SiO_2	3–7.2	23.5–37.9	23.1–29.7	6.9–8.7
Na_2O	< 0.5–4.8	0.8	2–3.8	6.6–26.7
MnO	2.2–5.9	8.4–9.9	6.1–8	4.1–7.5
FeO (Fe_2O_3)	16.4–40.2	28.7–45.5	31.2–43.2	18–35.6
TiO_2	0.4–2.5	3–4.6	4.5–6.1	< 0.4
CaO	8.7–21.5	0.7–0.8	< 0.4	2.5–6.7
Al_2O_3	1–2.2	0.1	0.1–0.9	< 0.8
MgO	< 1	0.1–0.2		< 0.1
F	13–19.2	0	< 1.5	14–19.4

Source: Adapted from ASF (Swedish Work Environment Fund) 1974: " Welding research and new technical solutions for a better work environment in the welding industry."

tions above 1% noted in a recent review of a large number of welding fume samples is shown in Table 10.3 (IARC, 1990).

One electrode type of great occupational health impotance is the low-hydrogen electrode used with conventional shielded metal arc welding systems to maintain a hydrogen-free arc environment for critical welding tasks on certain steels. The electrode coating is a calcium carbonate–calcium fluoride system with various deoxidizers and alloying elements such as carbon, manganese, silicon, chromium,

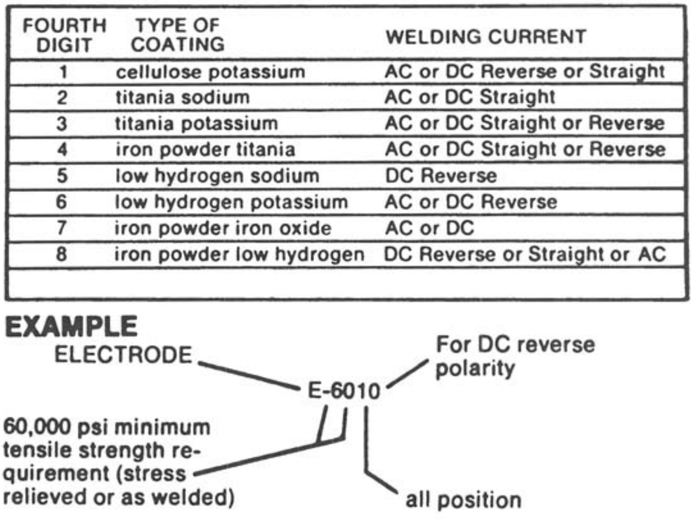

FOURTH DIGIT	TYPE OF COATING	WELDING CURRENT
1	cellulose potassium	AC or DC Reverse or Straight
2	titania sodium	AC or DC Straight
3	titania potassium	AC or DC Straight or Reverse
4	iron powder titania	AC or DC Straight or Reverse
5	low hydrogen sodium	DC Reverse
6	low hydrogen potassium	AC or DC Reverse
7	iron powder iron oxide	AC or DC
8	iron powder low hydrogen	DC Reverse or Straight or AC

Figure 10.3 American Welding Society shielded electrode classification.

TABLE 10.3 Principle Elements (Concentration Greater than 1%) in Fume Generated by Various Welding Processes on a Range of Metals

MIG/Al	Al
MIG/Ni	Ni, Fe
MIG-MAG/MS	Fe, Mn, Si
MIG-MAG/SS	Fe, Mn, Cr, Ni
MIG/MS	Fe, Mn, Si, K
MMA/Ni	Ni, Fe, Ba
MMA/NS	Fe, Mn, Ca, K, Si, F Ti
MMA/SS	Fe, Mn, Ca, Si, F, K, Ti, Cr, Ni

Source: Adapted from IARC (1990).

nickel, molybdenum, and vanadium. A large part of this coating and of all electrode coatings becomes airborne during welding. Early studies showed that 9% of the fumes from low hydrogen electrodes may be fluorides; of that quantity, 10–22% is in the form of soluble fluorides (Ferry, 1953). Fluorides may comprise up to 20% of the total fume concentration, depending on the coating thickness and electrode core diameter (Pantucek, 1971).

It has been suggested that the calcium fluoride is degraded in the arc to silicon hexafluoride, which then forms hydrogen fluoride in the presence of water vapor. Although hydrogen fluoride is found in the low hydrogen welding environment, it is not known if the hypothesized mechanism is correct.

10.2.2 Exposure Profile

10.2.2.1 Metal Fumes. The potential health hazards from exposure to metal fume during shielded metal arc welding obviously depend on the metal being welded and the composition of the welding electrode. The principal component of the fume generated from mild steel is iron oxide. The hazard from exposure to iron oxide fume appears to be limited. The deposition of iron oxide particles in the lung does cause a benign pneumoconiosis known as siderosis. There is no functional impairment of the lung nor is there fibrous tissue proliferation. In a comprehensive review of conflicting data, Stokinger (1984) concluded that iron oxide is not carcinogenic to humans.

The concentration of metal fume to which the welder is exposed depends not only on the composition of the parent metal and the electrodes, but also on the welding process, including the current density (amperes per unit area of electrode), the wire feed rate, the arc time (which may vary from 10 to 30%), the power configuration, that is, dc or ac supply, and straight or reverse polarity. The work environment also defines the level of exposure to welding fume and includes the type and quality of exhaust ventilation and whether the welding is done outdoors, in an open building workstation, or in a confined space. Much of the data on metal fume exposures have been generated from shipyard studies; in these studies the air concentration of welding fume ranged from less than 5 to over 100 mg/m^3 depending on the welding process, ventilation, and degree of enclosure.

Fume Generation Rate. Studies done by the American Welding Society in the 1970s provide extensive data on the fume generation rate from various welding processes (AWS, 1973). Development of standard methods to define fume generation rate has continued in both the United Kingdom and the Scandanavian countries and additional data on rates have been published. Ulfvarson (1986) states that all welding processes have similar generation rates with the exception of tungsten inert gas welding which is significantly lower than the others. Observed generation rates cited by Ulfvarson range from 20 mg per min for shielded metal arc welding to 80 mg per min for metal inert gas welding. The differences in fume exposures noted in workplace studies are mainly due to differences in duty cycle, that is, the amount of time the arc is struck (Ulfvarson, 1986).

Field Studies. Exposure data continue to emerge from shipyard studies. The health status of over 300 welders in 65 Singapore shipyards working with shielded metal arc welding on mild steel was studied by Phoon and Tan (1983). Twenty-three percent of the total fume samples taken outside the welders' helmets exceeded 5 mg/m^3 in open welding spaces while 68% exceeded that concentration in confined space work. The bulk of the fume samples contained oxides of iron, manganese, and zinc. Occasionally, the air samples contained lead in excess of 0.2 mg/m^3.

Exposure to fumes from low hydrogen welding under conditions of poor ventilation may prompt complaints of nose and throat irritation and chronic nosebleeds. There has been no evidence of systemic fluorosis from this exposure. Monitoring can be accomplished by both air sampling and urinary fluoride measurements. A comprehensive study was completed by Smith (1967) of metal fume exposure during low hydrogen welding in various industrial settings classified as confined, enclosed, and open conditions. In this study 75% of the samples taken in confined spaces exceed 10 mg/m^3; 50% of the enclosed samples and 27% of the open samples exceeded this condition. The current TLV for fluorides of 2.5 mg/m^3 was exceeded in 37% of the samples taken in confined spaces and in 13% of those collected in enclosed and open locations.

Dawada and Twano (1968) have shown that low hydrogen welding on low- and high-alloy steels produces oxides of nickel, chromium, molybdenum, and copper in addition to the normally observed oxides of iron, silicon, and manganese. Airborne fluorides are also present in significant concentrations. In other studies there did not appear to be a direct correlation between the percent of fluorides in the electrode coating and in the welding fume. The exposure to various gases, including nitrogen dioxide and ozone, during low-hydrogen welding is apparently the same as that during conventional electrode welding.

Sjogren et al. (1984) demonstrated a linear correlation of both personal breathing zone total fume concentrations and fluoride concentrations in air using post-shift urinary fluoride samples taken from welders employing basic electrodes containing 18–20% fluoride. Air samples were taken inside the welding helmet for a minimum of one-half shift. The maximum total fume concentration was 13 mg/m^3 and the air concentration of fluoride was approximately 1.2 mg/m^3.

10.2.2.2 Gases and Vapors. Shielded metal arc welding has the potential to fix atmospheric nitrogen as nitrogen oxides at temperatures above 600°C. Concentrations are not a problem in open shop welding. In over 100 samples of shielded metal arc welding, the author has not identified an exposure to nitrogen dioxide in excess of 0.5 ppm under a wide range of operating conditions. Oxygen is also fixed as ozone by the arc, but again it is not a significant contaminant in shielded metal arc welding operations. Carbon monoxide and carbon dioxide are produced from the electrode covering, but air concentrations are usually minimal.

In a review of two studies of shipboard welding, the maximum concentrations of various gases noted were nitrogen dioxide (212 ppm), carbon monoxide (110 ppm), acrolein (0.08 ppm), and ozone (0.6 ppm) (Kierst et al., 1964 and Steel, 1978). These high concentrations were observed in enclosed space welding with limited exhaust ventilation.

10.2.2.3 Radiation. The radiation generated by shielded metal arc welding covers the spectrum from the IR-C range of wavelengths to the UV-C range. To date there has been no evidence of eye damage due to IR radiation from arc welding. The acute condition known to the welder as "arc eye," "sand in the eye," or "flash burn" is due to exposures in the UV-B range (see Figure 10.4). The radiation in this range is completely absorbed in the corneal epithelium of the eye and causes a severe photokeratitis. Severe pain occurs 5–6 hr after exposure to the arc and the condition clears within 24 hr. Welders likely experience this condition only once and then protect themselves against a recurrence by using of a welding helmet

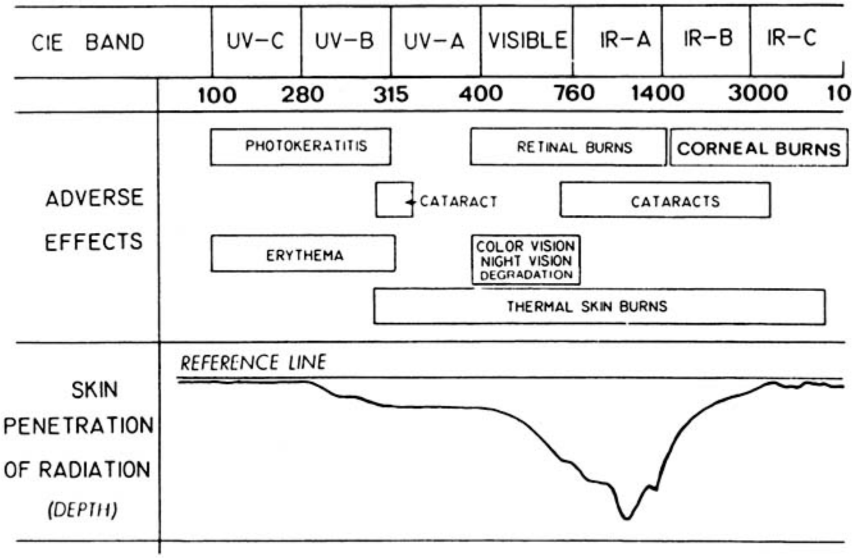

Figure 10.4 International Commission on Illumination (CIE) spectral bands. (From *Safety with Lasers and Other Optical Sources* by D. Sliney and M. Wolbarsht. Copyright 1980. Reproduced with permission of Plenum Publishing Co.)

with a proper filter, and tinted safety goggles. Skin erythema or reddening may also be induced by exposure to UV-C and UV-B, as shown in Figure 10.4.

Of the major processes, metal inert gas welding produces the most UV radiation with shielded metal arc welding the next most effective, and finally tungsten inert gas welding (IARC,1990). The UV flux at 1 m from the arc (Moss and Murray, 1979) in shielded metal arc welding is 0.7–2.5 W/m^2

The typical magnetic flux density at the 60-Hz welding generator is 2-200 μT (Stuchly and Lecuyer, 1989). Current pulses of up to 100,000 A produce magnetic fields of up to 10,000 μT at 0.2–1.0 m from the welding transformer cables (Stern, 1987).

10.3 GAS TUNGSTEN ARC WELDING (GTA)*

Although shielded metal arc welding using coated electrodes is an effective way to weld many ferrous metals, it is not practical for welding aluminum, magnesium, and other reactive metals. The introduction of inert gas in the 1930s to blanket the arc environment and prevent the intrusion of oxygen and hydrogen into the weld provided a solution to this problem.

10.3.1 Process

In gas tungsten arc welding (Figure 10.5), the arc is established between a nonconsumable tungsten electrode and the workpiece producing the heat to melt the abutting edges of the metal to be joined. Argon or helium is fed to the annular space around the electrode to maintain the inert environment. A manually fed filler rod is commonly used. The gas tungsen arc welding technique is routinely used on low-hazard materials such as aluminum and magnesium in addition to a number of alloys including stainless steel, nickel alloys, copper-nickel, brasses, silver, bronze, and a variety of low-alloy steels that may have industrial hygiene significance.

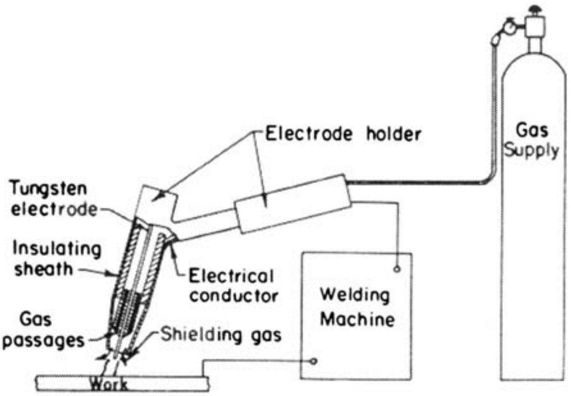

Figure 10.5 Equipment for gas tungsten arc welding (GTA).

---

*This is also known as Tungsten Inert Gas (TIG) and Heliarc.

10.3.2 Exposure

The welding fume concentrations in gas tungsen arc welding are lower than in manual stick welding and gas metal arc welding. High-energy gas tungsen arc welding produces nitrogen dioxide concentrations at the welder's position; the maximum concentration noted by the author is 3.0 ppm. Argon results in higher concentrations of nitrogen dioxide than helium.

The inert gas technique introduced a new dimension in the welder's exposure to electromagnetic radiation from the arc, with energies an order of magnitude greater than shielded metal arc welding. The energy in the UV-B and -C ranges, especially in the region of 270 nm, are the most biologically effective radiation and will produce skin erythema and photokeratitis. The energy concentrated in the wavelengths below 200 nm (UV-C) is most important in fixing oxygen as ozone. The gas tungsen arc welding procedure does produce a rich, broad spectral distribution with important energies in these wavelengths. Kranz (1965) states that the arc spectrum is dependent on the main metal component of the electrode and that the alloying metals and electrode cover constituents do not play a significant role in defining the spectral distribution. Spectral data on steel welding with a variety of coated electrodes and gas shielded electrodes supports this statement (Dahlberg and Myrin, 1971). In inert gas welding of aluminum, the spectrum maximum is stated to be aluminum lines. Early studies by Silverman and Gilbert (1954) showed that the ozone concentration was higher when welding on aluminum than on steel because of the UV reflectance of aluminum, and that argon produced higher concentrations of ozone than of helium owing to its stronger spectral emission. The spectral energy is shown to be dependent on current density. From the preceding discussion it is obvious that air sampling must be conducted for both ozone and nitrogen dioxide when evaluating exposures from gas tungsen arc welding.

When the gas tungsen arc welding process was introduced, it was found that a tungsten alloy containing 2% thoria was desirable for the nonconsumable electrode. This prompted concern with regard to the potential problem from the airborne levels of radioactive thoria. Studies showed that under normal current the electrode was consumed at a rate of 0.1–0.3 mg/min (Breslin and Harris, 1952). The airborne levels of thoria at the breathing zone were not significant, although ventilation control was recommended when dressing the thoriated-tungsten electrode.

10.4 GAS METAL ARC WELDING (GMA)*

10.4.1 Process

In the 1940s a consumable wire electrode was developed to replace the nonconsumable tungsten electrode used in the gas tungsen arc welding system. Originally developed to weld thick, thermally conductive plate, this gas metal arc welding process (Figure 10.6) now has widespread application on aluminum, copper, magnesium, nickel alloys, titanium, and steel alloys.

---

*This is also known as Metal Inert Gas Welding (MIG)

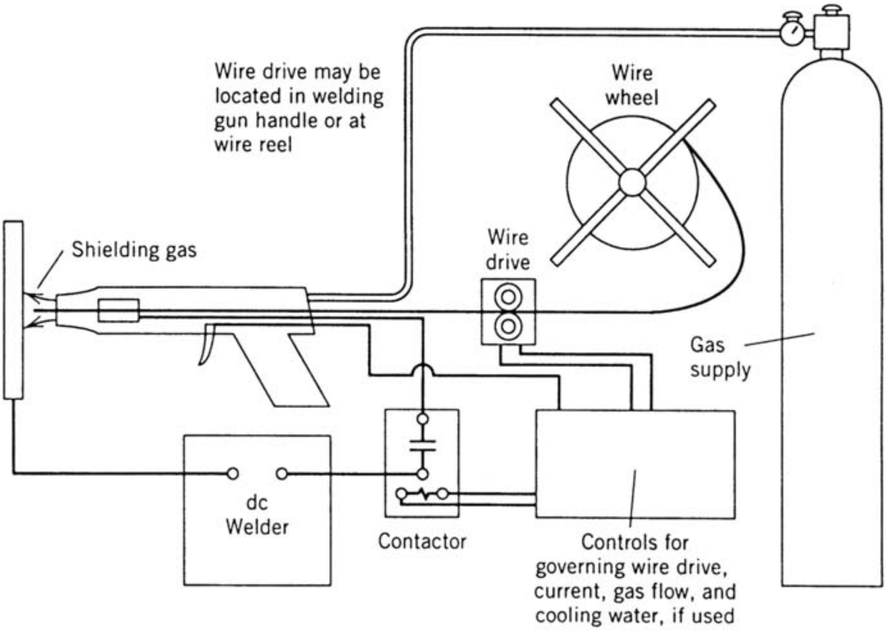

Figure 10.6 Equipment for gas metal arc welding (GMA).

In this system the welding torch has a center consumable wire fed from a reel or spool that maintains the arc as it melts into the weld puddle. Around this electrode is an annular passage for the flow of helium, argon, carbon dioxide, nitrogen, or a blend of these gases. The composition of the wire is usually the same as or similar to the base metal with a flash coating of copper to insure electrical contact in the gun and to prevent rusting. If filler wire is used, it contains deoxidizers or scavengers. Manganese, silicon, and aluminum are used as deoxidizers for steel filler wires; titanium and silicon, for nickel alloy wire; and titanium, silicon and phosphorus for copper alloy wires.

An improvement in gas metal arc welding is the use of a flux-cored consumable electrode. The electrode is a hollow wire with the core filled with various deoxidizers, fluxing agents, and metal powders. The arc may still be shielded with carbon dioxide or the inert gas shield may be generated by the flux core alone. In the latter case the process is called self-shielding.The fume will include oxides of the filler wire as well as copper fume if the wire is copper clad. Ozone concentration may be as high as 1.0 ppm if welding on aluminum.

Initial attempts to use CO_2 as the gas were not completely successful. The introduction of wire with an antioxidant made its use possible. The process using CO_2 is termed metal active gas welding or MAG. The duty cycle of metal inert gas welding is much higher than shielded metal arc welding since there is no slag to remove.

10.4.2 Exposure Profile

Alpaugh et al. (1968) studied the differences between gas and shielded metal arc welding and found that the iron oxide fume concentrations were generally higher with shielded metal technique. The nitrogen dioxide concentrations were of the same order of magnitude; however, ozone concentrations were higher with the gas metal arc welding technique. Two separate investigations indicate that gas metal arc welding produces higher concentrations of ozone than gas tungsen arc welding (Frant, 1963 and Lanau, 1967). The ozone generation rate increases with an increase in current density, but plateaus rapidly. The arc length and the inert gas flow rate do not have a significant impact on the ozone generation rate.

Carbon dioxide is widely used on gas metal arc welding because of its attractive price; argon and helium cost approximately 15 times as much. The carbon dioxide process is similar to other inert gas arc welding shielding techniques and one encounters the usual problem of metal fume, ozone, oxides of nitrogen, decomposition of chlorinated hydrocarbons solvents, and UV radiation. In addition, the carbon dioxide gas is reduced to form significant concentrations of carbon monoxide. The generation rate of carbon monoxide depends on current density, gas flow rate, and the base metal being welded. Although the concentrations of carbon monoxide may exceed 100 ppm in the fume cone, the concentration drops off rapidly with distance and with reasonable ventilation hazardous concentrations should not exist at the breathing zone.

The intensity of the radiation emitted from the arc is, as in the case of gas tungsen arc welding, an order of magnitude greater than that noted with shielded metal arc welding. The impact of such a rich radiation source in the UV-B and UV-C wavelengths has been covered in the gas tungsen arc welding discussion. Both procedures present an additional problem first described by Ferry and Ginter (1953) and described under gas tungsen arc welding, that is, the decomposition of trichloroethylene and other chlorinated hydrocarbon vapors by UV emission from the gas metal welding arc forming chlorine, hydrogen chloride, and phosgene.

Although it was generally accepted that nickel carbonyl can be formed during welding on nickel alloys with a CO_2 shielded arc, until recently the extent of this problem was not an assessed. Wiseman and Chapman (1986) found that nickel carbonyl is formed at concentrations just exceeding the detection level. It would appear from this study that the risk from this exposure is nil.

Ulfvarson (1981) states that metal inert gas welding and tungsten inert gas welding do generate significant ozone concentrations. The highest exposures occur with metal inert gas welding on aluminum–silica alloys; the rate of ozone generation in this case is 5–20 times that for metal inert gas welding on stainless steel.

In a study of 45 welding shops in Sweden, by Ulfvarson (1986), 36% of the total fume samples exceeded 5 mg/m^3 and 16% of the ozone samples exceeded 0.1 ppm. The highest nitrogen dioxide concentration of 3 ppm was found for metal inert gas arc welding on aluminum. The highest ozone concentrations were noted while welding aluminum–silicon alloys.

NIOSH investigators evaluated a welding shop that built and repaired long wall mining equipment of mild steel using metal inert gas welding (NIOSH, 1990a).

Although marginal dilution ventilation was the major control technique, the contaminant concentrations were generally below the occupational exposure limits. Concentrations of iron fume were 0.09–0.93 mg/m^3, the TWA concentrations for nitrogen dioxide ranged from 0.08 to 0.38 ppm, carbon monoxide concentrations were 1.4–14 ppm, and short-term ozone concentrations were all less than 0.05 ppm.

10.5 SUBMERGED ARC WELDING (SAW)

10.5.1 Process

In this process (Figure 10.7), shielding of the arc from the atmosphere is accomplished by covering the weld with a granular, fusible flux. The filler metal is a bare wire electrode; in addition, one may use a supplemental filler wire to feed

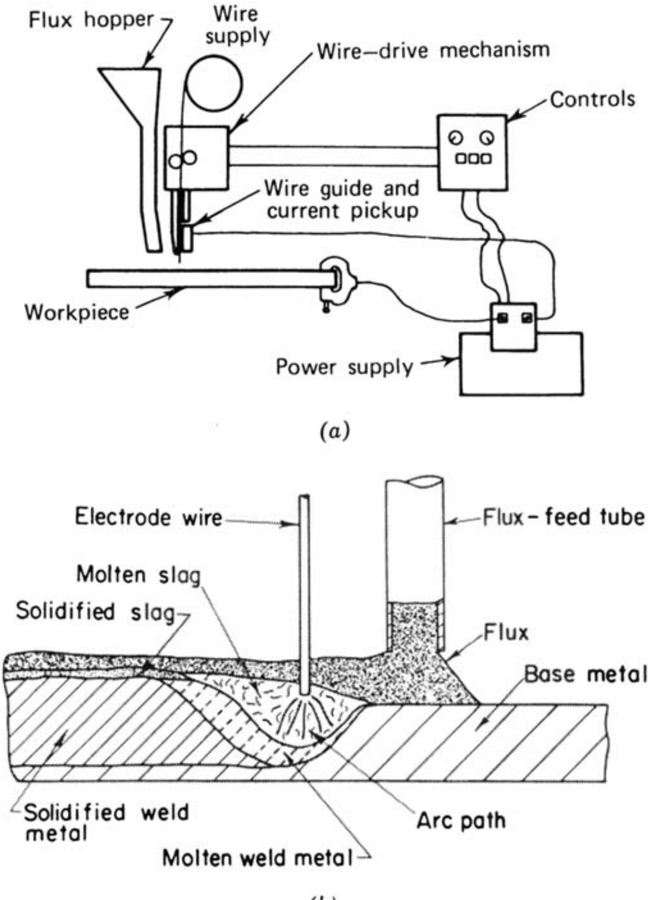

Figure 10.7 Submerged arc welding. (*a*) Welding equipment (*b*) Weld cross section.

into the arc. The granular flux is fed onto the metal ahead of the arc path, sintering to form a molten slag cover over the weld metal. The flux shields the arc, adds alloy metal, stabilizes the arc, and defines the weld-bead shape. The technique is used in either a semi- or fully automatic mode for welding thick sections on plain carbon and low-alloy steel.

10.5.2 Exposure Profile

As expected, the metal fume concentrations during submerged arc welding are lower than those for either shielded or gas metal arc welding because of the blanketing action of the flux. The arc is maintained beneath the flux without sparks, smoke, or flash. This method produces as little as one-eighth the fume of other arc-welding procedures. An analysis of the fume from submerged arc welding shows significant concentrations of silicon dioxide, iron oxide, fluorides, and manganese.

The principle exposure from this procedure is hydrogen fluoride and soluble fluoride particulates released from the welding flux. Since the flux eliminates the direct arc radiation and suppresses the generation of metal fume, submerged arc welding has not received significant industrial hygiene review. In most cases, the process is not provided with local exhaust ventilation, but relies on dilution ventilation.

When filling the flux hopper and picking up waste flux there is a dust exposure which includes titanium, calcium, barium, potassium, aluminum, sodium, and chlorine compounds.

10.6 PLASMA ARC WELDING AND CUTTING (PAW AND PAC)

10.6.1 Process

In the plasma arc process (Figure 10.8) the welding head is designed to provide a flow of a gas such as argon through an orifice under a high-voltage gradient, resulting in a highly ionized gas stream. A complex interaction of mechanical and electromagnetic forces produces arc temperatures greater than 33,400°C (60,000°F). In addition to welding, this technique is widely used for cutting and metallizing. The hazards of the process include noise, ozone, nitrogen dioxide, and metal fume exposures.

10.6.2 Exposure Profile

The health hazards presented by plasma arc welding are similar to those presented by gas tungsen arc welding but they introduce some new problems. The UV spectrum from plasma arc welding is much more intense than in other inert gas arc welding systems. This results in major skin and eye exposures and requires special clothing and eye protection. For example, plasma normally requires the use of a No. 14 shade eye protection and full chrome leather clothing, while light manual shielded metal arc welding requires only a No. 10 shade. The rich UV-B spec-

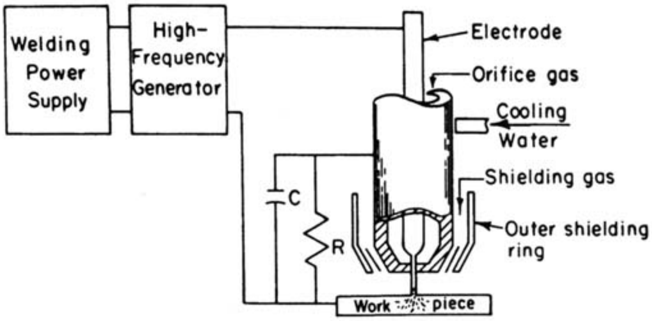

Figure 10.8 Plasma arc welding equipment (PAW).

trum (280–315 nm) results in high ozone generation rates and the rich arc is effective in fixing nitrogen oxides. Fannick and Corn (1969) have shown that the concentrations of ozone and nitrogen dioxide can easily exceed the TLVs unless local exhaust ventilation is available.

In a review of seven studies, the ozone concentration during plasma welding ranged from not detectable to 8.3 ppm during the cutting of steel without ventilation. The nitrogen dioxide concentrations reached a maximum of 9.6 ppm under these conditions. The noise level at the operator's position may be in the range of 110–120 dBA. This noise is principally aerodynamic in origin from the plasma stream and is therefore difficult to control. Many operations require an enclosed operating booth for noise control with a downdraft-exhausted welding table for removal of air contaminants.

10.7 LASER WELDING

In this process, an optically focused beam of coherent light from a laser is used to melt a well-defined workpiece area. Since the beam cross section is small and well defined, it can be positioned accurately for precise work. The small melt area and the precise positioning make it acceptable on operations where the workpiece is sensitive to heat. When coupled with a CNC positioning system, the laser welder has wide application for cutting, welding, and surface treating of similar and dissimilar materials.

10.7.1 Process

Both gas and solid-state lasers are now operating in production facilities. A widely used solid-state laser, neodymium-doped yttrium–aluminum–garnet (Nd:YAG), with a wavelength of 1.06 μM, operates in the pulse mode at power levels of 400–500 W (Figure 10.9*a*). Until recently the use of this laser was restricted to precision work including drilling small holes, welding and cutting high infrared-reflective materials that could not be handled by CO_2 lasers, and resistance welding thin metal sections. These systems are now being made in power levels of 2.5

Next Page

kW and will soon be able to compete with CO_2 lasers on many operations from which they had been excluded because of low power capabilities.

The CO_2 units lase at a wavelength of 10.6 μM in either pulsed or continuous wave mode, presently at power levels of 6 kW, but in the near future levels up to 45 kW are predicted (Figure 10.9b). Since the CO_2 laser is more powerful than YAG units, it can perform more operations at higher speeds on a variety of materials. In addition to welding and cutting flat stock, it is now used to apply wear surfaces to turbine blades, to machine dies and tooling, and to trim metal and plastic piece parts from molding, press, and forging operations (Vaccari, 1992).

The three major components of a laser welding system include the laser, the workstation, which includes the beam delivery system and the work-handling

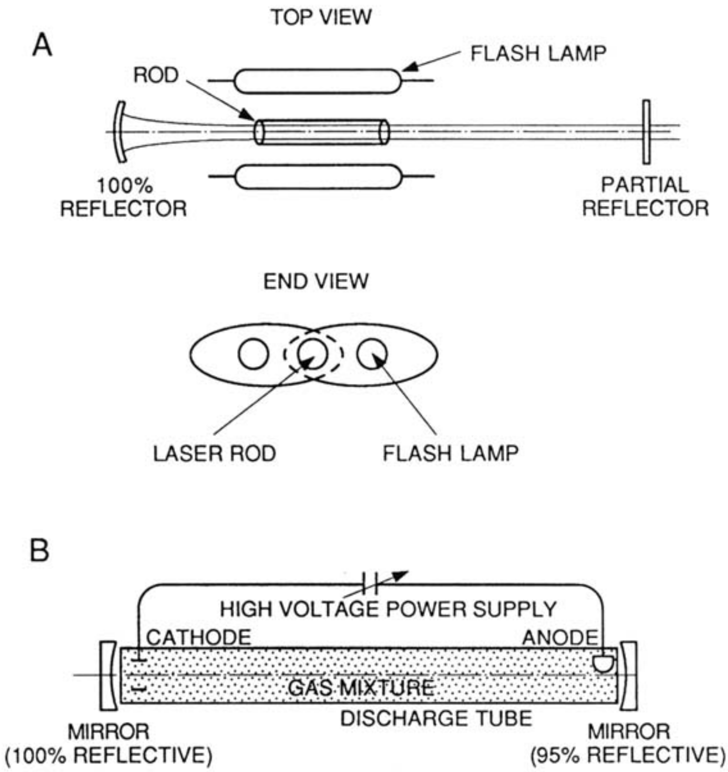

Figure 10.9 (*a*) Solid-state Neodymium:YAG laser. Impurities in the rod-shaped solid matrices are excited by a capacitive discharge through one or two flash lamps. This excitation results in a brief burst of light, or pulse, which is sufficient for welding. (*b*) A CO_2 laser. A mixture of CO_2, helium, and nitrogen is the lasing gas. Electric charges excite the CO_2 molecules in the laser cavity. When the charge dissipates, the CO_2 molecules are left in a metastable state. As the electrons in the molecules go to ground state, photons of light are emitted. Mirrors then reflect the photons back into the cavity, sustaining the reaction so that the system produces continuous waves of laser light. Source: Courtesy of Machine Design.

equipment, and the CNC system (Figure 10.10). It is frequently necessary to provide an inert shielding gas to prevent weld oxidation (Vanderwert, 1984).

The eye and skin hazards from laser operation related to the beam are well recognized (Sliney and Wolbarsht, 1980). The focused laser beam is the main hazard since it may hit the operator and cause serious injury; hazards exist in any location where the beam is unshielded, where there is specular reflection from shiny surfaces, and during accidental activation of the beam (Hietanen et al., 1992). In addition, scatter of the primary beam may occur and both visible and UV light may result from the plume radiation from the beam–workpiece interaction. The requirements for laser control programs to protect against such accidents are based on the laser classification (ANSI, 1993). New European Community safety rules for industrial lasers consider not only the beam hazard but the mechanical, electrical, noise, and vibration, composition of the laser, including associated gases, liquid chemicals, and air contaminants generated by the beam–workpiece interaction (European Committee for Electrotechnical Standardization, 1990).

10.7.2 Exposure Profile

Rockwell and Moss (1983) studied both scattered and plume radiation from a Class 4 Nd:YAG laser in a welding application and found that reflection of the beam may produce hazardous conditions. Plume radiation for power levels up to 0.3 kW presents minimal hazard. The authors recommend minimum eye protection with an optical density of 6 at 1.06 μM and an optical density of 1 for blue light to control for both direct and indirect radiation. In a later paper, Rockwell and Moss (1989) reviewed the optical hazards of a 1.5-kW CO_2 laser designed for metal welding. The authors concluded that the high-power CO_2 laser beam produced sig-

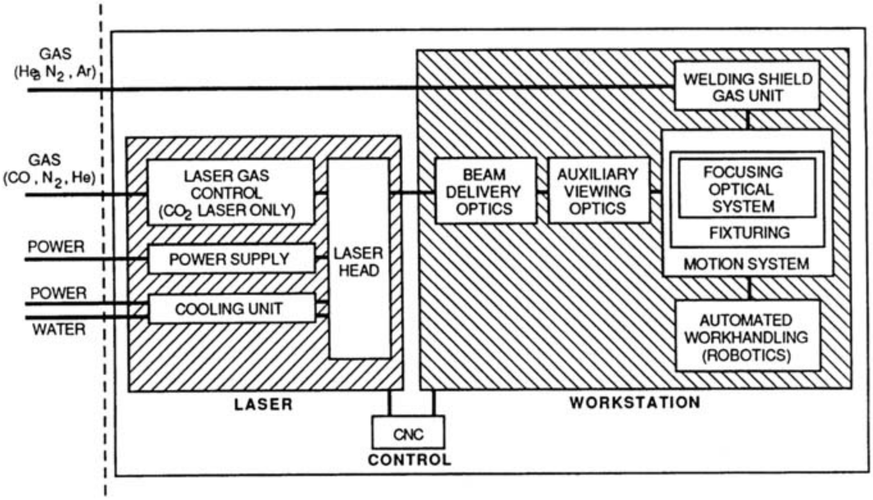

Figure 10.10 The total laser system consisting of the laser itself, the workstation, which includes the optics and the positioning drive, and the computer numerical control. Source: Courtesy of Machine Design.

nificant UV and visible light from laser interaction with the workpiece. These systems require rigorous control to meet the requirements of ANSI Z136.1 (ANSI, 1993), including eye protection, barriers, and gloves.

A general issue not given attention in early applications of lasers is the air contamination from the beam–workpiece interaction. It is obvious that metal fumes with a particle size below 0.5 μM will be released; less well known are the chemical species and the toxicology of contaminants released from workpieces with organic coatings or plastic substrates. Among the decomposition products released from plastic cutting are various polycyclic hydrocarbons (Rockwell, 1989).

Hietanen et al. (1992) investigated the exposure of operators of an open beam Class 4 CO_2 laser in the metal industry and compared it to conventional welding. The IR laser beam interacted with the workpiece to release both UV and visible light. The diffuse reflected beam produced a low irradiance during normal work; the main problem was the scattered radiation from a misdirected beam, which resulted in an irradiance of 1.2 mW/m^2 at a power output of 2.5 kW. The shortest permissible exposure time for UV was 95 sec on stainless steel work and 124 sec on carbon steel workpieces. The recommended exposure time for bluelight was 11 min on stainless. This exposure required that eye protection be worn for both UV and blue light. The laser produced less metal fume than conventional arc welding; in cutting stainless steel the fume generation rate was the same as metal inert gas welding.

10.8 RESISTANCE WELDING

In resistance welding (Figure 10.11), an electric current is passed through workpieces held together under pressure. There is a localized heating at the contact surfaces due to the contact resistance and the metal coalesces. Various welding methods including seam, spot, projection, and flash welding are based on this technique. No flux or filler metal is added in this process.

Resistance welding is used widely for the assembly of light sheet metal fabrications. The hazards are minimal; indeed, the only complaint arising from this op-

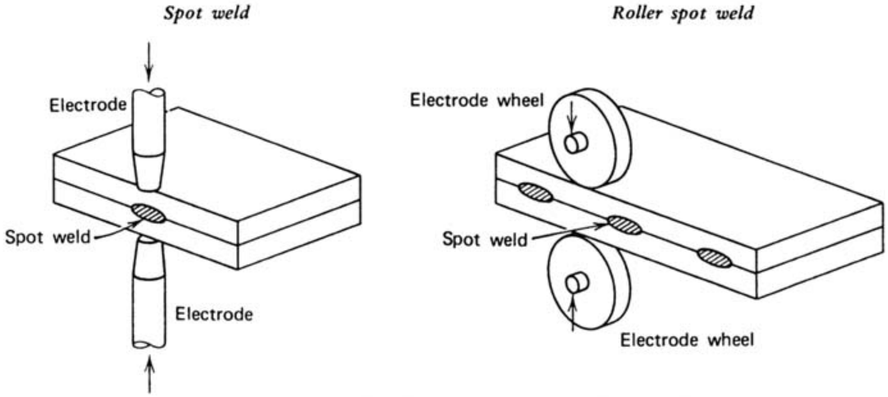

Figure 10.11 Two types of resistance welding: spot welding and roller spot welding.

eration is due to welding parts with residual surface oil, which degrades during the welding, forming aldehydes that prompt worker complaints from olfactory, respiratory, and eye irritation.

In a review of a resistance welding operation in the assembly of wire shelving, the ozone concentration determined at a fixed location with a direct reading instrument routinely exceeded the ACGIH TLV (ceiling) of 0.1 ppm (NIOSH, 1990a). Aldehyde concentrations were not detected, indicating that the wire had been adequately cleaned before welding. Nitrogen dioxide concentration were less than one tenth of the ACGIH TLV. Welding fume concentrations were below the occupational exposure limits.

10.9 GAS WELDING AND CUTTING

10.9.1 Process

In this process, (Figure 10.12) the heat of fusion is obtained from the combustion of oxygen and one of several gases including acetylene, methylacetylene–propadiene (MAPP), propane, butane, and hydrogen. The flame melts the workpiece and a filler rod is manually fed into the joint. Gas welding is used widely for light sheet metal and repair work. The hazards from gas welding are minimal compared to those from arc welding techniques.

The uncoated filler rod is usually of the same composition as the metal being welded except on iron, where a bronze rod is used. Paste flux is applied by dipping the rod into the flux. Fluxes are used on cast iron, some steel alloys, and nonferrous work to remove oxides or assist in fusion. Borax-based fluxes are used widely on nonferrous work while chlorine, fluorine, and bromine compounds of lithium, potassium, sodium, and magnesium are used on gas welding of aluminum and magnesium.

10.9.2 Exposure Profile

The metal fume originates from the base metal, filler metal, and the flux. The fume concentration encountered in field welding operations depends principally on the degree of enclosure in the work area and the quality of ventilation. Since gas or torch welding is conducted at temperatures lower than those for arc welding processes, one seldom encounters excessive concentrations of metal fumes except when using lead, zinc, and cadmium, which have significant vapor pressures at relatively low temperatures.

The principal hazard in gas welding in confined spaces is due to the formation of nitrogen dioxide. The highest concentrations occur when the torch is burning without active welding. Strizkerskiy (1961) found concentrations of nitrogen dioxide of 280 mg/m^3 in a space without ventilation and of 12 mg/m^3 in a space with some ventilation. This investigator cautions that phosphine may be present as a contaminant in acetylene and that carbon monoxide may be generated during heating of cold metal with a gas burner.

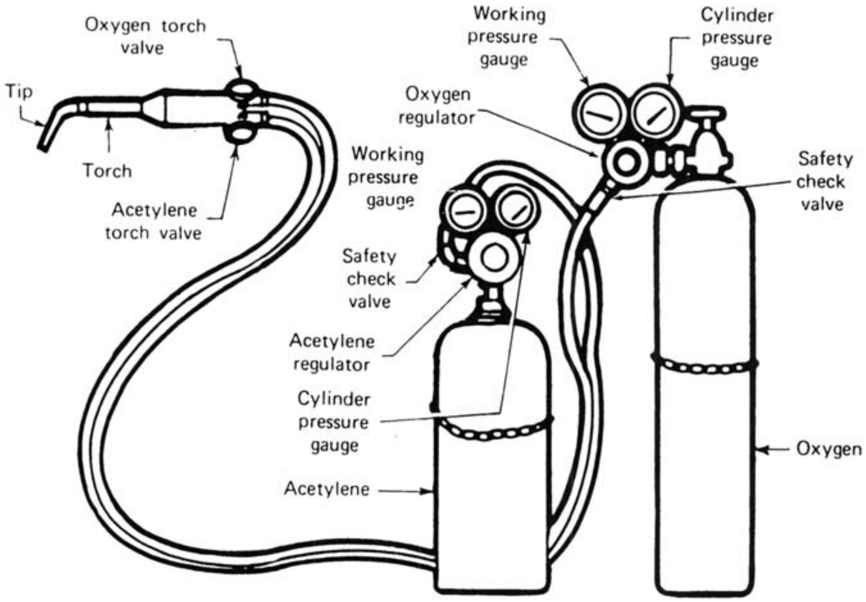

Figure 10.12 Gas welding. (Courtesy of Hobart Brothers, Inc.)

The radiation exposure from gas welding is quite different from arc welding. The principal emissions are in the visible and IR-A, -B, and -C wavelengths and require the use of light tinted goggles for work. Ultraviolet radiation from gas welding is negligible.

Lead burning is a special form of gas welding and cutting used to provide a corrosion-resistant lead lining for tanks and vessels. A case study of such an operation completed at a copper smelter in Utah and described by a NIOSH Health Hazard Evaluation team provides an excellent description of the work and its attendant hazards (NIOSH, 1991). Two large vessels (85 ft long and 12.5 ft in diameter) used for acid treatment of copper ores were relined with lead sheet by a contractor who specialized in this work. The job was done in three well-defined phases. First, the old lead lining was removed by grinding down to the tank's steel shell; this work involved exposure to lead dust in the confined tank space. The freshly ground surface was then tinned by applying flux-cored tin–lead solder with oxygen–acetylene torches. The surface was immediately hand wiped with cloths to ensure a continuous film of tin. Local torch heating resulted in high ambient temperatures, noise from the torch, and exposure to lead fume and hydrogen chloride vapor from the fluxed solder. Finally, lead sheets (18 in. x 48 in. x 5/8 in. thick) were laid on the tinned tank surface and the edge of the lead was bonded to the tinned surface with the gas torch. The seam between the lead sheets was filled with molten lead using lead stick or rod burned in by a torch. The principal exposure in this final phase of the work was to lead fume.

The workers used personal protective clothing and a half-mask air-purifying respirator with a combination high-efficiency filter and acid gas cartridge. Air sampling for lead fume on various operations gave full-shift TWAs ranging from 141 to 307 μg/m³. Short-term concentration ranged from 27 to 42 μg/m³ for grinding, 280–390 μg/m³ for tinning, and 215–307 μg/m³ during lead burning. Biological sampling showed mean blood levels ranging from 11 to 77 μg/100 g of whole blood, with two workers exceeding 50 μg/100 g of whole blood. The noise level exceeded 90 dBA and a hearing conservation program was required. Heat stress indices were not calculated, but it is anticipated that the appropriate occupational exposure limits would be exceeded.

The lead burners employed by this contractor travel from one job to another and typify the itinerant industrial specialist who is placed in a new work situation at each job. In work as hazardous as lead burning, each job requires a job hazard analysis to ensure that the worker is not placed at risk.

10.10 SCARFING AND CUTTING PROCESSES

10.10.1 Process

Several techniques have been developed to cut slab steel, remove gates and riser systems on castings, gouge out defective metal in castings, and remove surface scale on billets. One such process (Arcair) utilizes a copper-clad, boron–graphite electrode in a manual electrode holder with an integral compressed air supply to blow away the molten metal from the puddle as it melts. Electrode diameters vary from 3.2 to 25.4 mm (1/8 to 1 in.) and operate at 50–2200 A to remove up to 0.9 kg (2.0 lb) of metal per minute. Another process, powder burning, is based on an oxygen–acetylene torch with the addition of iron powder to create a high-temperature flame that will cut through very thick steel metal sections.

10.10.2 Exposure Profile

The principal hazard from these operations is the exposure to metal fume. In a study of these processes, a series of breathing zone samples inside the helmet on a powder burning operator averaged 31.1 mg/m³ without local exhaust ventilation and less than 7 mg/m³ when control was achieved with sidedraft local exhaust ventilation. On an Arcair operation, the average of the inside helmet samples was 21.5 mg/m³, but dropped to 3.3 mg/m³ when local exhaust was operating. The authors of the study state that the worker would be exposed to metal fumes of manganese, nickel, copper, and chromium, in addition to carbon monoxide, oxides of nitrogen, and ozone (Sentz and Rakow, 1969).

In a study conducted in the United Kingdom, Sanderson (1968) reviewed arc gouging operations in open, semienclosed, and enclosed settings and found that in ventilated operations, the principal hazards were iron oxide fume from the workpiece and copper fume from the cladding on the electrode. The air concentrations of copper were 14 times the ACGIH TLV. In enclosed operations, lead, copper, and iron oxide fume concentrations were high and ozone and carbon monoxide concentrations exceeded their respective ACGIH TLVs.

Both full-shift TWA and peak exposures of welding fume and associated gases were evaluated by personal breathing zone sampling on varied welding processes in coal-fired power plants (McFeters and Saint, 1984). As expected, the highest fume concentrations were associated with flame gouging with full shift TWA concentrations ranging from 4.3 to 23 mg/m^3; the geometric mean concentration was 10.3 mg/m^3. The maximum concentration for tungsten inert gas welding was 7.4 mg/m^3 and for shielded metal arc welding it was 10.5 mg/m^3. Although carbon monoxide, oxides of nitrogen, and ozone were measured, only carbon monoxide presented a significant exposure.

10.11 BRAZING

10.11.1 Process

This technique of joining metals has much in common with soldering operations, but it is identified as a welding process by the American Welding Society. Brazing is defined as a technique for joining metals that are heated above 430°C (800°F), while soldering is conducted below that point. The temperature of the operation is of major importance since it determines the vapor pressure of the metals that are heated and therefore the concentration of metal fumes to which the operator is exposed. Brazing techniques are used widely in the manufacture of refrigerators, electronics, jewelry, and aerospace components to join both similar and dissimilar metals. Although the final joint looks similar to a soft solder bond, it is of much greater strength and the joint requires little finishing.

Flux is chosen to prevent oxidation of the base metal and not to prepare the surface, as is the case with soldering. The common fluxes are based on fluorine, chlorine, and phosphorous compounds, and present the same health hazards as fluxes used in soldering: they are corrosive to the skin and can cause respiratory irritation. A range of filler metals are used, as shown in Table 10.4, and include phosphorous, silver, zinc, copper, cadmium, nickel, chromium, beryllium, magnesium, and lithium. This selection of the proper filler metal is the key to quality brazing.

Brazing of small job lots that do not require close temperature control are routinely done with a torch. More critical, high-production operations are accomplished by dip techniques in a molten bath, in brazing furnaces using either an ammonia or hydrogen atmosphere, or by induction heating.

10.11.2 Exposure Profile

The brazing temperatures define the relative hazards from the various operations. For example, the melting point of cadmium is approximately 140°C (280°F). The vapor pressure of cadmium and the resulting airborne fume concentrations increase dramatically with increasing temperature, as shown in Table 10.5. The filler metals with the higher brazing temperatures, therefore, will present the most severe exposure to cadmium. The exposure to fresh cadmium fumes during brazing of low-alloy steels, stainless steels, and nickel alloys has resulted in documented cases

TABLE 10.4 Brazing Filler Materials

Base Metal to be Brazed	Brazing Filler Metals (AWS–ASTM Designation)	Brazing Technique
Stainless steels	Silver alloys (BAg)	Torch
	Copper alloys (BCu, BCuP, BCuZN	Furnace, dry hydrogen
Aluminum	Aluminum–silicon alloys (BAlSi)	Furnace Induction Dip
Magnesium	Magnesium alloys (BMg)	Torch Dip
Copper	Copper–phosphorus (BCuP) Copper–zinc (BCuZn) Silver alloys	All techniques
Nickel	Silver alloys (BAg) Copper alloys (BCuP, BCuZn)	All techniques
Low-alloy steels	Silver alloys (BAg) Copper alloys (BCuP, BCuZn) Nickel alloys (BNi)	All techniques

of occupational disease and represents the major hazard from these operations. This is especially true of torch brazing, where temperature extremes may occur. On the other hand, the temperatures of furnace and induction heating operations may be controlled to ±5°C.

One study of brazing in a pipe shop and on board a ship included air sampling for cadmium while brazing with a filler rod containing from 10 to 24% cadmium (Mangold and Beckett, 1971). The mean concentration during shipboard operation was 0.45 mg/m^3 with a maximum of 1.40 mg/m^3.

10.12 SPECIAL PROBLEMS ASSOCIATED WITH WELDING

10.12.1 Decomposition of Chlorinated Hydrocarbon Vapors

In an initial study of the formation of phosgene by UV radiation from welding arcs in an environment contaminated with trichloroethylene and methyl chloroform at concentrations below the TLV, Dahlberg and Myrin (1971) devised a model to pre-

TABLE 10.5 Vapor Pressure of Cadmium

Temperature (°C)	Vapor Pressure (mm Hg)	Cadmium Concentration (mg/m^3 at 25°C)
157	0.000021	0.12
200	0.00034	2.01
227	0.0015	8.9
321 (m.p.)	0.095	560
392	1.0	5900

Source: Elkins (1959).

dict the concentration of phosgene in air. Hazardous concentrations of phosgene were noted in the near field of the arc, although the air concentrations of the two solvents were below their occupational exposure limits. The authors did find that dichloroacetylchloride was also formed in the UV field, and it was an effective warning agent of the presence of phosgene because of its lachrymatory effects. This work was extended by Andersson et al. (1975) in an investigation of the fate of low concentrations of perchloroethylene solvent vapor in the welding field. In this study the predictive model was quite effective for metal inert gas welding, but less so for shielded metal arc welding. The investigators found that perchloroethylene vapor would also degrade to form phosgene with the coincidental formation of trichloroacetylchloride. In this case, however, trichloroacetylchloride did not provide adequate warning of the presence of phosgene.

10.12.2 Thermal Degradation of Coatings

It is common practice to prime steel prior to production to provide corrosion resistance during storage and early fabrication steps. A number of weldable paints have been designed to permit the direct welding of the painted area without impairing the quality of the weldment. However, when the temperature of the coated surface increases, the coating degrades and forms a range of complex organic compounds. Engstrom et al. (1988) investigated the contaminants released from the major weldable paints when subjected to welding, flame cutting, and direct flame heating. The number and complexity of the organic compounds formed by the thermal degradation of weldable paints is shown in Table 10.6. It would be extremely difficult to construct a truly comprehensive exposure profile; in lieu of such an exhaustive study, the authors propose that the concentration of selected contaminants

TABLE 10.6 Organic Substances Formed During Welding of Painted Mild Steel

Epoxy	Alkylated benzenes[a], aliphatic alcohols (C_1-C_4)[a], bisphenol A[a], phenol, aliphatic ketones (C_3-C_5), acetophenone, aliphatic aldehydes (C_1-C_4), aliphatic amines (C_1-C_2)
Ethyl silicate	Aliphatic alcohols (C_1-C_4)[a], butyraldehyde[a], butyric acid, aliphatic aldehydes (C_6-C_9), formaldehyde, acetaldehyde, acetic acid
Polyvinyl butyral	Aliphatic alcohols (C_1-C_4)[a], butyraldehyde[a], butyric acid[a], formaldehyde[a], acetaldehyde, acetic acid, phenol
Modified epoxy ester	Aliphatic aldehydes (C_1-C_9)[a], aliphatic acids (C_5-C_9)[a], methyl metacrylate[a], butyl methacrylate, phenol[a], bisphenol A[a], alkylated benzenes, aliphatic alcohols (C_1-C_4), phthalic anhydride, acrolein, aliphatic hydrocarbons (C_6-C_7)
Modified alkyd	Aliphatic aldehydes (C_6-C_9)[a], acrolein[a], phthalic anhydride[a], aliphatic acids (C_5-C_9)[a], alkylated benzenes, aliphatic alcohols (C_1-C_4), formaldehyde, benzaldehyde

Source: Engstrom et al. (1988).

[a] Major compound.

be identified. Formaldehyde and aldehydes should be sampled since they are thermal degradation products of all weldable paints; phthalic anhydride is released from modified alkyd and epoxy ester based weldable paints. Bisphenol and methacrylates are thermal degradation products of epoxy and epoxy ester based paints and should be sampled.

The goal of a continuing study by Henriks-Eckerman et al. (1990) was to devise sampling and analytical methods for thermal degradation products of paints stressed by welding processes. Steel plate was coated on one side with a range of shipyard primers and finishing paints chosen to represent the the major binder systems. The other side of the plate was subjected to direct flame to bring the painted surface to a temperature of 350°C. A complex "soup" of 100–200 chemical species was found originating from the paint (Table 10.7). The principal exposures to the welders were sensory irritants and sensitizers.

The methods described by Henriks-Eckerman et al. (1990) were subsequently applied to investigations of the exposures of welders in a shipyard doing new construction, repair, and shipbreaking. The study included welding, flame cutting, and straightening steel sections by direct flame application (Engstrom et al., 1990). As suspected, the repair and shipbreaking operations represented the highest exposures to all contaminants, due probably to both the high duty cycle and the degree of enclosure. The welding fume concentration was extremely high, with a median concentration of 24 mg/m^3 on new hull construction, 13 mg/m^3 on outfitting new construction, 16 mg/m^3 on repair, and greater than 90 mg/m^3 on shipbreaking. In most cases, the concentrations of the organic thermal degradation products were less than the occupational exposure limits, but still may present respiratory irrita-

TABLE 10.7 Thermal Degradation Products of Weldable Paints

Paint System	Principal Degradation Products
Epoxy paint	Phenol Bisphenol A Ammonia Aliphatic/aromatic amines
Polyvinyl butyrate paint	Butyraldehyde Butyric acid
Alkyd paint	Aliphatic organic acids Aldehydes Phthalic anhydride
Chlorinated rubber paint	Hydrogen chloride
Epoxy primer	Phenol Bisphenol A Methacrylates
Modified alkyd primer	Aliphatic organic acid Aldehydes Phthalic anhydrides
Ethyl silicate paint	Ethanol

Source: Adapted from Henriks-Eckerman et al. (1990).

tion to the welders. The concentration of phthalic anhydride ranged from 0.03 to 0.13 mg/m^3 with the maximum during shipbreaking; the median concentration of acrolein was 0.07 mg/m^3 with a maximum of 1.4 mg/m^3 during shipbreaking. Bisphenol A, the major thermal degradation product of epoxy paint, was present in a maximum median concentration of 0.22 mg/m^3 in new hull construction.

The significance of exposure to thermal degradation products of paint in welding on painted surfaces was identified by Sjogren et al. (1991), who presented a case report on welders who suffered fever and pulmonary function decrement after welding on steel coated with a chlorine-containing polymer lacquer. Although the specific offending agent was not identified, the exposure probably included hydrogen chloride, zinc oxide, hexachlorocyclopentadiene, and trimellitic anhydride.

In discussing the contaminants generated from thermally degraded metal coatings by welding processes, the Welding Institute in the United Kingdom. states that the residual pigments in paint will form oxides of lead, chromium, barium, tin, copper, antimony, and zinc (TWI, 1986). The vehicle, including the resin, will degrade to form carbon monoxide, carbon dioxide, and complex organic substances. In unusual circumstances the metal substrate may have been metallized with a number of substances, as noted in Chapter 14, and the welding process will form oxides of these compounds.

10.12.3 Welding on Stainless Steel

Seventy percent of the stainless steel welding is done by either shielded metal arc welding with coated chromium–nickel alloy electrodes or metal inert gas welding with uncoated chromium–nickel wire (Becker et al., 1985). A number of laboratories have conducted extensive studies of the total content of chromium in stainless steel welding fume from various welding processes, the percent of the total chromium that is hexavalent chromium, and the partitioning of the hexavalent chromium into soluble and nonsoluble species. Investigators have found that metal inert gas welding on stainless steel presents high total chromium concentrations, but the amount that is in the hexavalent chromium form is nil. Shielded metal arc welding on stainless steel does present a fume with a large fraction in the soluble hexavalent chromium form. In this case it is thought that the alkaline metal content of the extruded covering contributes to the high hexavalent chromium content of the fume. Modification of the electrodes by substituting a different material has significantly reduced the hexavalent chromium content of the fume (IARC, 1990).

There has been difficulty in devising valid sampling and analytical methods for the determination of total chromium, nickel, and hexavalent chromium in the welding fume. Gray et al. (1983) identified the aging of chromium fume in air as, first, an increase in the hexavalent chromium content and then a partial decay in its content. The authors compared results on both filter and wet collection methods and found that the latter method gave concentrations fivefold greater than the dry-sampling method. Moreton et al. (1983) proposed new procedures for sampling these air contaminants. The discussion of the validity of various air sampling methods for the chromium content of welding fumes from metal inert gas welding revolves both around the fate of hexavalent chromium on moist sampling media and the stability of hexavalent chromium in air with time. Pedersen et al. (1987) cite both over- and underreporting depending on the chromium collection media and the analytical method.

In a study of the valence state of chromium in welding fume from an alloy containing 16–20% chromium, 8.5–14% nickel, and small percentages of manganese and molybdenum, van der Wal (1985, 1990) found chromium fume from shielded metal arc welding was mainly in the soluble hexavalent chromium form, but that in both metal and tungsten inert gas welding the fume contained chromium in the nonsoluble Cr III valence state without any hexavalent chromium present. In all three processes the concentrations of nickel were negligible.

The exposure of welders to both chromium and nickel was identified by van der Wal (1985) by personal breathing zone air sample samples taken inside the welders' helmets. As noted in Table 10.8, the percentage of hexavalent chromium was highest in the shielded metal arc welding process; indeed it exceeded the ACGIH TLV in only that process. The nickel exposures however exceeded the proposed occupational exposure limits of 50 $\mu g/m^3$ in a number of processes.

10.12.4 Welding Fume Particle Size

A detailed study of the particle size distribution of the fume arising from low hydrogen welding with basic electrodes was conducted by Johannson et al. (1986) using particle-induced X-ray emission analysis. The data, shown in Table 10.9, is a detailed description of the complexity of welding fume and shows that most of the fume has a mass median aerodynamic diameter less than 2 μm.

Glinsmann and Rosenthal (1985) state that 90% of welding fume particles are less than 1 μM. The AWS (1979) data indicate that in shipyard studies of welding fume, 60% of the particles are less than 0.25 μM, and of that fraction, 90% are less than 0.05 μM.The size data on welding fume from other authors has been summarized by IARC (1990) and is shown in Table 10.10. The small particle size of welding fume ensures that there will be high deposition rates in the lower respiratory tract.

TABLE 10.8 Metal Fume Concentrations at Breathing Zone from Various Welding Processes on Stainless Steel

Process	Total Fume (mg/m^3)	Cr (VI) ($\mu g/m^3$)	Nickel ($\mu g/m^3$)
Shielded metal arc welding	2–40	25–1550	10–210
Metal inert gas welding	1.5–3	< 1	30
Tungsten inert gas welding	0.8–4.2	< 1	10–40
Tungsten inert gas welding (Monel)	1.3–5	—	330
Plasma cutting	1.0–7.5	< 1-40	< 10–260
Plasma welding	0.2–1.1	< 1	1-20

Source: Adapted from van der Wal (1985).

TABLE 10.9 Elemental Size Distribution of Welding Fume Particles (Shielded Metal Arc Welding with Basic Coating Electrode)

	Particle diameter, μm			
Element	< 0.25	0.25–0.5	0.5–1.0	1.0–2.0
	Nanograms collected by 30 sec air samples			
F	300	1640	1730	55
K	290	1400	1650	65
Ca	230	970	925	29
Ti	9 ± 14%	39	44	1.6 ± 25%
Mn	72	375	340	9
Fe	280	1520	1230	31
Cu	—	1.2 ± 37%	1.0 ± 48%	—
Zn	1.3 ± 37%	5.4 ± 15%	4.3 ± 17%	1.0 ± 37%

Source: Adapted from Johannson et al. (1986).

10.13 CONTROL OF EXPOSURE

10.13.1 The Welding Process and Equipment

Over the past decade Hewitt and co-workers in the United Kingdom have investigated the mechanics of fume generation in welding to better understand the operative mechanisms with the hope that modifications to the welding process can be made to reduce welders' exposure to air contaminants. Hewitt and Hirst (1991) proposed that metal fume from metal inert gas welding is generated by four mechanisms: (1) vaporization of the metal from the homogeneous pool, (2) vaporization of metal from small-diameter hot spatter particles of great total surface area, (3) vaporization of metal from the incompletely mixed molten pool with surface depletion occurring, and (4) initial fume undergoing a reaction which changes its vapor pressure and therefore its rate of vaporization. The authors state that mechanism (1) will generate a fractionated fume whose fraction composition is unlike the parent alloy. As an example, the authors state that as an alloy material, manganese with a high vapor pressure would result in a disproportionately high concentration in the fume. Mechanisms (2) and (3) result in a fume with the same composition as the parent alloy.

Table 10.10 Summary of Particle Sizing Studies on Welding Fume from Mild Steel

Welding Process	Particle Size (μm)	Reference
Shielded metal arc welding	0.35–0.60	Malmqvist et al. (1986)
	0.23–0.56 (MMAD)[a]	Eichhorn and Oldenberg (1986)
	0.20	Stern (1977)
Metal inert gas welding	< 0.2	Stern (1983)
	0.11–0.23 (MMAD)	Eichhorn and Oldenberg (1986)

Source: IARC (1990).

[a] MMAD, mass median aerodynamic diameter.

In stainless steel welding the content of the alloy is not important in defining the welder's exposure; the significant contributor to the fume is the electrode. Shielded metal arc welding on stainless steel results in higher hexavalent chromium exposure than metal inert gas welding; alkaline-coated electrode generates more chromium than other electrodes. A change in the binder from potassium to sodium silicate significantly reduces the generation rates of soluble fluorides in low-hydrogen welding.

Welding blankets and mats are widely used to protect equipment from spatter and to thermally insulate workpieces which are heated for strain relief during welding. Until the 1980s, these blankets were frequently made of asbestos; since that time there has been a conversion to glass and ceramic-based materials. Waterman et al. (1990) investigated the ability of these materials to stand the physical abuse of the welding workplace and the concentration of fibers released from the mats during active work. Three types of mats, identified in the United Kingdom as Type A Brazing Pad, Type B Glass Cloth, and Type C Ceramic Heat Resistent Mat, all generated fiber concentration in the work area of less than 0.01 fibers/ml.

10.13.2 Preparation of the Parent Metal and Surface Coatings

In discussions of the individual welding processes, it was assumed that the workpiece was mild steel and, therefore, that the predominant metal fume contaminant was iron oxide. One must also consider the fume exposures that occur while welding steel alloys, nonferrous metal, and copper alloys. Metal coatings and the welding electrodes also contribute to the metal fume exposure. Table 10.11 shows the wide range of metal fume concentrations encountered in welding. Recent interest in the possible carcinogenicity of chromium and nickel fume has prompted special

TABLE 10.11 Welding Fume Concentration Range for Various Processes[a]

Contaminant	Shielded Metal	Gas Metal	Gas Metal Flux Core	Gas
Fumes (*mg*/*m*^{3})				
Total fume	1–25	1–30	1–25	2–15
Iron oxide	0.2–10	1–10	0.25–15	1–10
Copper	0.01–0.15	0.01–0.5	0.01–0.2	0.01–0.05
Manganese	0.01–1	0.01–0.05	0.02–2	0.01–0.05
Fluoride	0.01–3	0.01	0.02–5	0.01
Gases (*ppm*)				
Nitrogen dioxide	0.1–3	0.1–5	—	0.01–1.5(60)
Carbon monoxide	1–15	1–20	—	5–10
Ozone	0.01	0.01–0.4	—	—

Source: Adapted from TWI (1986).

[a] These data are based on over 3000 welding investigations in industry, representing a wide range of ventilation and degree of enclosure.

attention to these exposures during welding, as discussed in Section 10.12.3. Lead has been used as an alloy in steels to improve its machinability, and welding on such material requires rigorous control. This is also the case with manganese, used in steel alloys to improve metallurgical properties. Beryllium, probably the most toxic alloying metal, is added to copper and warrants close control during welding and brazing operations.

Welding or cutting on workpieces that have metallic coatings may be especially hazardous. Lead-based paints have been used commonly on marine and structural members. Welding on these surfaces during repair and shipbreaking generates high concentrations of lead fume. In the author's experience, cutting and welding on structural steel covered with lead paint resulted in concentrations exceeding 1.0 mg/m^3 in well-ventilated conditions out of doors; concentrations in excess of 10 mg/m^3 may occur in poorly ventilated confined spaces.

Steel is galvanized by dipping in a hot zinc dip. Pesques (1960) found that air concentrations of zinc during the welding of galvanized steel and steel painted with zinc silicate ranged from 3 to 12 times the ACGIH TLV under conditions of poor ventilation. The author noted that the concentrations were lower on oxygen–acetylene torch work than arc cutting. When good ventilation was established, the ACGIH TLV for zinc was seldom exceeded.

The hazard from burning and welding of pipe coated with a zinc-rich silicate can be minimized in two ways. Since pipes are joined end to end, the principle recommendation is to mask the pipe ends with tape before painting. If it is necessary to weld pipe after it is painted, the first step before welding is to remove the paint by hand filing, power brush or grinding, scratching, or abrasive blasting. If the material cannot be removed, suitable respiratory protection is mandated; in many cases air-supplied respirators may be required.

As noted in Section 10.12.2, studies on weldable paints have shown that significant concentrations of respiratory irritants occur from the thermal degradation products of the paint. Where possible, an ethyl silicate shop primer should be used since it has a negligible release potential for such irritants (Engstrom et al., 1990). If not, the surface coating on metal to be welded should be removed for approximately 1 in., and for burning, 2–4 in.

10.13.3 Ventilation

Conventional arc welding (shielded metal arc welding) on ferrous metals in open areas can usually be performed safely with dilution ventilation; however, welding in confined spaces will always require local exhaust. Reliance on general exhaust ventilation alone for control of welding fume may not be appropriate at all times. Ulfvarson (1986) noted that the reduced effectiveness of general exhaust ventillation in the heating season resulted in an increase in air concentrations two- to threefold that of the nonheating season.

Local exhaust ventilation is also needed when using gas tungsen or gas metal arc welding techniques on stainless steel, high alloy steels, nickel alloys, and copper alloys, or when the base metal is coated with toxic metal. Guidelines for ventilation control by dilution and conventional local exhaust are available (NIOSH, 1988; Burgess et al., 1989; ACGIH, 1992). A high velocity–low air volume exhaust system has been evaluated for several welding applications with mixed reviews.

The most difficult control problem is welding in confined spaces such as on shipboard. In the 1940s, a portable exhaust system unit was developed for shipboard welding use with an integral particulate filter for removal of metal fume with direct recirculation. A similar system with both a particulate filter and an adsorption system for the removal of gases has been introduced recently in Denmark and may be applicable for operations in which one cannot utilize conventional local exhaust systems.

Since ozone is formed in the UV-C field (most efficiently by wavelengths less than 200 nm), shielding of the arc may be effective. As mentioned earlier, in many cases mechanical shielding of the arc is not possible and the only control is exhaust ventilation. Hazardous concentrations of nitrogen dioxide may be generated in enclosed spaces in short periods of time and, therefore, require effective exhaust ventilation. Techniques for improved ventilation in enclosed refinery vessels have been proposed by Brief et al. (1961).

The effectiveness of local exhaust booths on Arcair operations in a foundry were evaluated in a recent NIOSH-sponsored study (1990a). Several conclusions were drawn from this valuable study. The authors found that there was no significant difference between lapel and in-helmet samples and that individual work practice had a significant impact on exposure to metal fume. In conventional welding, air concentrations inside the helmet may be as low as one-fifth to one-tenth the ambient air concentrations. Despite rather good ventilation control, TLVs for total welding fume or iron oxide fume were exceeded routinely. If time-weighted concentrations were calculated based on full-shift operations, only two out of four workers exceeded the TLV for total and iron oxide fume. The air jet caused violent dispersal of the metal fume, which made it difficult to achieve efficient collection by the hood. The authors concluded that control could be established with booth ventilation, but that individual work practice is an important consideration.

10.13.4 Confined Space Work

In evaluating the performance of a direct-reading aerosol photometer for measuring the concentration of fume from burning and welding operations in a shipyard, Glinsmann and Rosenthal (1985) developed a small data set of short period samples varying from 10 to 90 min in duration. In their review of the data, the authors categorized the samples by the degree of confinement and the quality of exhaust ventilation. The ventilation was graded by the location of the exhaust ventilation hood relative to the welding point. The strong dependence of the fume concentration on both the degree of confinement and the quality of ventilation is shown in Figure 10.13, with the degree of confinement having the greatest effect.

10.13.5 Radiant Energy

Eye protection from exposure to UV-B and UV-C wavelengths is obtained with filter glasses in the welding helmet of the correct shade, as recommended by the American Welding Society. The current recommendations for shade of filter lens

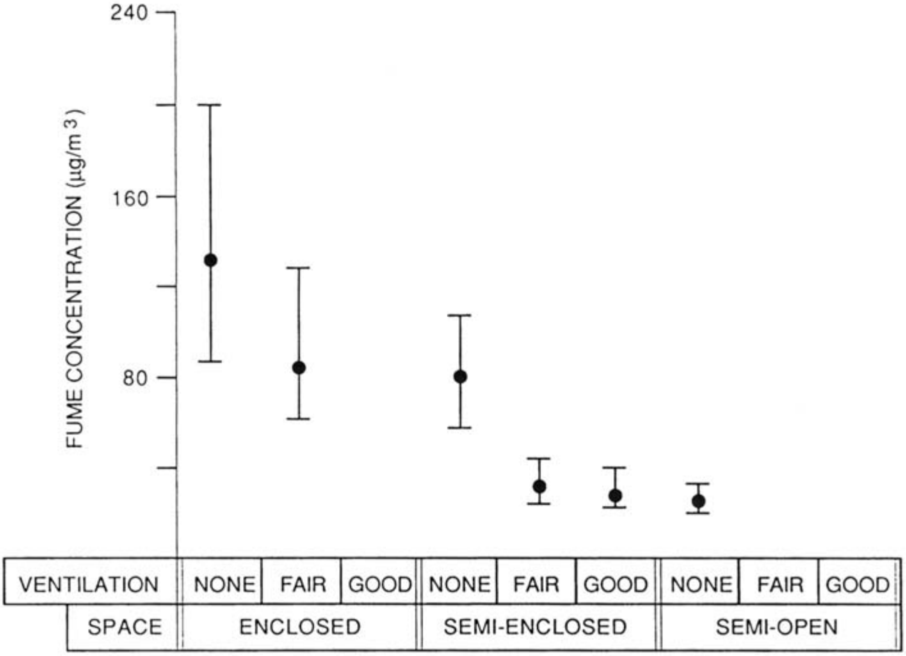

Figure 10.13 Impact of ventilation and degree of confinement on welding fume exposure. From Glinsmann and Rosenthal (1985). Source: Courtesy of *American Industrial Hygiene Association Journal.*

for welding helmets and hand shields is shown in Table 10.12 (AWS, 1988). As noted, within a given process (e.g., metal inert gas welding), there may be a choice of shade, depending on the operating current.

Eye protection must also be afforded other workers in the area. To minimize the hazard to nonwelders in the area, flash screens or barriers should be installed. New plastic "see-through" screens are effective in minimizing UV radiation (NIOSH, 1978). Plano goggles or lightly tinted safety glasses may be adequate if one is moderately distant from the operation. If one is 9–12 m (30–40 ft) away, eye protection is probably not needed for conventional welding; however, high current density gas tungsen arc welding or gas metal arc welding may require that the individual be 30.5 m (100 ft) away before direct viewing is possible without eye injury. On gas welding and cutting operations, IR wavelengths must be attenuated by proper eye protection for worker health and comfort.

The attenuation afforded by tinted lens is available in NBS reports and the quality of welding lens has been evaluated by NIOSH (1976). Glass safety goggles will provide some protection from UV, as do certain plastic safety glasses. The manufacturer will provide this information on request.

The UV radiation from inert gas shielded operations will cause skin erythema or reddening and therefore the welder must adequately protect his or her face, neck, and arms. Heavy chrome leather vest armlets and gloves must be used with such high-energy arc operations.

TABLE 10.12 Guide for Shade Numbers

Operation	Electrode Size 1/32 in. (mm)	Arc Current (A)	Minimum Protective Shade	Suggested[a] Shade No. (Comfort)
Shielded metal arc welding	Less than 3 (2.5)	Less than 60	7	—
	3–5 (2.5-4)	60–160	8	10
	5–8 (4–6.4)	160–250	10	12
	More than 8 (6.4)	250–550	11	14
Gas metal arc welding and flux cored arc welding		Less than 60	7	—
		60–160	10	11
		160–250	10	12
		250–500	10	14
Gas tungsten arc welding		Less than 50	8	10
		50–150	8	12
		150–500	10	14
Air carbon	(Light)	Less than 500	10	12
Arc cutting	(Heavy)	500–1000	11	14
Plasma arc welding		Less than 20	6	6 to 8
		20–100	8	10
		100–400	10	12
		400–800	11	14
Plasma arc cutting	(Light)[b]	Less than 300	8	9
	(Medium)[b]	300–400	9	12
	(Heavy)[b]	400–800	10	14
Torch brazing		—	—	3 or 4
		—	—	
Carbon arc welding		—	—	14
	Plate thickness			
	in.	mm.		
Gas welding				
Light	Under 1/8	Under 3.2		4 or 5
Medium	1/8 to 1/2	3.2 to 12.7		6 or 8
Heavy	Over 1/2	Over 12.7		6 or 8
Oxygen cutting				
Light	Under 1	Under 25		3 or 4
Medium	1 to 6	25 to 150		4 or 5
Heavy	Over 6	Over 150		5 or 6

Source: ANSI (1988).

[a] As a rule of thumb, start with a shade that is too dark to see the weld zone. Then go to a lighter shade which gives sufficient view of the weld zone without going below the minimum. In oxyfuel gas welding or cutting, where the torch produces a high yellow light, it is desirable to use a filter lens that absorbs the yellow or sodium line in the visible light of the (spectrum) operation.

[b] These values apply where the actual arc is clearly seen. Experience has shown that lighter filters may be used when the arc is hiddne by the workpiece.

10.13.6 Decomposition of Chlorinated Hydrocarbon Solvent Vapor

As noted in Section 10.12.1 the decomposition of chlorinated hydrocarbon solvent vapors occurs in the UV field around the arc and not in the arc itself. The most positive control is to prevent the solvent vapors from entering the welding area. Merely maintaining the concentration of solvent below the ACGIH TLV is not, in itself, satisfactory. If vapors cannot be excluded from the workplace, the UV field should be reduced to a minimum by shielding the arc. Pyrex R glass is an effective shield that permits the welder to view his or her work. Rigorous shielding of the arc is frequently possible at fixed station work locations, but it may not be feasible in field welding operations.

10.13.7 Personal Protective Equipment

The welding helmet is designed to protect the welders from hot sparks and spatter from the weldment and the installed plate provides eye protection from UV radiation. The helmet must be worn in conjunction with side shield eye glasses for protection when the helmet is in the up position. In addition to its primary function, the helmet also reduces the air concentration of contaminants. A series of studies in the late 1960s indicated that the welder's helmet reduced the fume exposure by a factor of 3–15. In a more recent study by Goller and Paik (1985) on welders constructing locomotive frames by shielded metal arc welding, arc–air gouging and torch cutting, the helmets reduced the outside concentration by 36–71 percent.

As one component of a Health Hazard Evaluation, NIOSH investigators evaluated the respiratory protection program at a plant making stainless steel autoclaves (NIOSH, 1990b). The company had provided supplied air respirators for inside tank work where high ozone concentrations were encountered. The results of an interview on the acceptance of the devices is enlightening. In the group of 13 welders, 8% wore the respirators at all times, 23% wore them only when welding inside tanks, 46% occasionally wore them on inside tank work, and 23% never wore them. The low level of acceptance was due to complaints of inconvenience, dryness of throat and nose, and concern for their safety, that is, the quality of the respirable air.

The design of the welder's protective clothing reflects the hazard from hot spatter. The clothing is designed with a minimum number of pockets, cuffs, and indeed any spot that would catch a spark. The clothing should provide continuous area coverage and be worn so that sleeves overlap gloves and pants overlap shoes. Flame-resistent gloves, capes, sleeves, and leggings must be constructed of heavy material reflecting their use.

Controls from brazing operations must obviously be based on the identification of the composition of the filler metals. Local ventilation control is necessary on operations where toxic metal fumes may be generated from the brazing components or from parts plated with cadmium or other toxic metals. In the use of common fluxes, one should minimize skin contact because of their corrosiveness and provide exhaust ventilation to control airborne thermal degradation products released during the brazing operation.

REFERENCES

ACGIH (1992), *Industrial Ventilation, A Manual of Recommended Practice*, 22nd ed., Committee on Industrial Ventilation, American Conference of Governmental Industrial Hygienists, Cincinnati, OH.

Alpaugh, E., Phillips, K., and Pusifer, H. (1968), *Am. Ind. Hyg. Assoc. J.*, **29**, 551.

Andersson, H. F., Dahlberg, J. A., and Wettstrom, R. (1975), *Ann. Occup. Hyg.*, **18**, 129–132.

ANSI (1988), *Safety in Welding and Cutting*, ANSI Z49.1-1988, American National Standards Institute, New York.

ANSI (1993), *American National Standards for the Safe Use of Lasers*, ANSI Z136.1, American National Standards Institute, New York.

AWS (1973), *The Welding Environment*, American Welding Society, Miami, FL.

AWS (1979), *Effects of Welding on Health*, American Welding Society, Miami, FL.

AWS (1988), *Safety in Welding and Cutting*, American Welding Society, ANSI Z49.1-1988, Miami, FL.

Becker, N., Claude, J., and Frentzel-Beyme, R. (1985), *Scan. J. Work Environ. Health*, **11**, 75–82.

Breslin, A. and Harris, W. (1952), *Am. Ind. Hyg. Q.*, **13**, 191–195.

Brief, R. S., Raymond, L., Meyer, W., and Yoder, J. (1961), *Air Cond. Heat Vent.*, **58**, 73.

Buck, H. and Dessler, A. (1967), International Institute of Welding Document III-311-67, Paris, France.

Burgess, W. A., Ellenbecker, M. J., and Treitman, R. D. (1989), *Ventilation for Control of the Work Environment*, Wiley, New York.

Dahlberg, J. A. and Myrin, L. M. (1971), *Ann. Occup. Hyg.*, **14**, 269–274.

Dawada, K. and Twano, K. (1968), International Institute of Welding Document VIII -342-68, Paris, France.

Eichorn, F. and Oldenburg, T. (1986). in *Health Hazards and Biological Effects of Welding Fumes and Gases,* R. M. Stern, A. Berlin, A. C. Fletcher, and J. Jarvisalo, eds., Excerpta Medica, Amsterdam, pp. 51–59.

Elkins, H. B. (1959) *The Chemistry of Industrial Toxicology*, Wiley, New York.

Engstrom, B., Henriks-Eckerman, M. L., and Anas, E. (1990), *Am. Ind. Hyg. Assoc. J.*, **51**, 561–565.

Engstrom, K., Engstrom, B., and Henriks-Eckerman, L. (1988), *Scand. J. Work Environ. Health*, **14**, Suppl., 33–44.

European Committee for Electrotechnical Standardization (1990), *Radiation Safety for Laser Products, Equipment Classification, Requirements, and Users Guide*, EN 60825, Brussels, Belgium.

Fannick, N. and Corn, M. (1969), *Am. Ind. Hyg. Assoc. J.*, **30**, 226–235.

Ferry, J. (1953), *Am. Ind. Hyg. Assoc.* J., **14**, 173–178.

Ferry, J. and Ginter, G. (1953), Welding J. **32**, 396.

Frant, R. (1963), *Ann. Occup. Hyg.*, **6**, 113.

Glinsmann, P. W. and Rosenthal, F. S. (1985), *Am. Ind. Hyg. Assoc. J.*, **46**, 391–395.

Goller, J. W and Paik, N. W. (1985), *Am. Ind. Hyg. Assoc. J.*, **46**, 89–63.

Gray, C. N., Goldstone, A., Dare, P. R. M., and Hewitt, P. J. (1983), *Am. Ind. Hyg. Assoc. J.*, **44**, 384–388.

Henriks-Eckerman, L., Engstrom, B., and Anas E., (1990), *Am. Ind. Hyg. Assoc. J.*, **51**, 241–244.

Hewitt, P. J. and Hirst, A. A. (1991), *Ann. Occup. Hyg.*, **35**, 223–231.

Hietanen, M., Honkasalo, A., Laitinen, H., Lindroos, L., Welling, I., and von Nandelstadh, P. (1992), *Ann. Occup. Hyg.*, **36**, 183–188.

IARC (1990), *IARC Monographs on the Evaluation of Carcinogenic Risks to Humans, Chromium, Nickel and Welding*, Vol. 49, World Health Organization, International Agency For Research On Cancer, Lyons, France.

Johannson, G., Malmquist, K., and Akselsson, R. (1986), in *Health Hazards and Biological Effects of Welding Fumes and Gases*, R. M. Stern, A. Berlin, A. C. Fletcher, and J. Jarvisalo, Eds., Excerpta Medica, Amsterdam, pp. 188–196.

Kierst, W., Vselis, J., Graczyk, M., and Krynick, A., (1964), *Bull. Inst. Mar. Med. Gdansk*, **15**, 149.

Kranz, E. (1965), Schwisstechnik, **15**, 446.

Lanau, R. (1967), *Ann. Occup. Hyg.*, **10**, 175.

Malmqvist, L. G., Johansson, G., Bohgard, M., and Akselsson, K. R. (1986), in *Health Hazards and Biological Effects of Welding Fumes and Gases*, R. M. Stern, A. Berlin, A. C. Fletcher, and J. Jarvisalo, Eds., Excerpta Medica, Amsterdam, pp. 31–46.

Mangold, C. A. and Beckett, R. R. (1971), *Am. Ind. Hyg. Assoc. J.*, **32**, 115.

McFeters, J. J., and Saint, D. G. (1984) Abstract 259, "Cooperative Studies of Welding Exposures of TVA Workers in Coal-Fired Power Plants," American Industrial Hygiene Conference, Detroit, MI.

Moreton, J., Bettelley, J., Mathers, H., Nicholls, A., Perry, R. W., Ratcliffe, D. B., and Svensson, L. (1983). *Ann. Occup. Hyg.*, **27**, 137–156.

Moreton, J. and Jenkins, N. (1984), *Ann. Occup. Hyg.*, **28**, 443–444.

Moss, C. E. and Murray, W. E. (1979), *Welding J.*, **9**, 37–46.

NIOSH (1976), *Report of Tests of Welding Filter Plates*, NIOSH Publ. No. 76-198, National Institute for Occupational Safety and Health, Cincinnati, OH.

NIOSH (1978), *Optical Radiation Transmission Levels Through Transparent Welding Curtains*, NIOSH Publ. No. 78–176, National Institute for Occupational Safety and Health, Cincinnati, OH.

NIOSH (1988), *Criteria for a Recommended Standard, Welding, Brazing and Thermal Cutting*, DHHS (NIOSH) Publ. No. 88-110a: PB 88-231774, National Institute for Occupational Safety and Health, Cincinnati, OH.

NIOSH (1990a), Health Hazard Evaluation Report, HETA 90-232-2138, Schulte Corp., Cincinnati, OH, National Institute for Occupational Safety and Health, Cincinnati, OH.

NIOSH (1990b), Health Hazard Evaluation Report, HETA 89-040-2010, MDT/Castle, Rochester, NY, National Institute for Occupational Safety and Health, Cincinnati, OH.

NIOSH (1991), Health Hazard Evaluation Report, HETA 91-290-2131, New England Lead Burning Co., Eaton Metals, Salt Lake City, UT, National Institute for Occupational Safety and Health, Cincinnati, OH.

Pantucek, M. (1971), *Amer. Ind Hyg. Assoc. J.*, **32**, 687–692.

Pedersen, B., Thomas, E., and Stern R. M. (1987), *Ann. Occup. Hyg.*, **31**, 325–338.

Pesques, W. (1960), *Amer. Ind Hyg. Assoc. J.*, **21**, 252–255.

Phoon, W. H. and Tan, K., (1983), *Occup. Health and Safety*, Jan. 1983, 19–25, Table 10.

Rockwell, J. (1989), *Lasers and Optronics*, Aug. 1989, 25–33.

Rockwell, R. J. and Moss, E. G. (1983), *Am. Ind. Hyg. Assoc. J.*, **44**, 572–579.

Rockwell, R. J. and Moss, E. G. (1989), *Am. Ind. Hyg. Assoc. J.*, **50**, 419–427.

Sanderson, J., (1968), *Ann. Occup. Hyg.*, **11**, 123–133.

Sentz, F. and Rakow. A. (1969), *Am. Ind. Hyg. Assoc. J.*, **30**, 143–146.

Silverman, L. and Gilbert, H. (1954), *Welding J.*, **33**, 218.

Sjogren, B., Hedstrom, L., and Linstedt, G. (1984), *Brit. J. Ind. Med.*, **41**, 192–196.

Sjogren, B., Backstrom, I., Fryk, G., Jakobsson, R., Milerad, I., Plato, N., and Tornling, G. (1991), *Scand. J. Work Environ. Health*, **17**, 441–443.

Sliney, D. H. and Wolbarsht, M. L. (1980), *Safety with Lasers and Other Optical Sources*, Plenum Press, New York.

Smith, L. (1967), *Ann. Occup. Hyg.*, **10**, 113.

Steel, J. (1978), *Ann. Occup. Hyg.*, **11**, 115–121.

Stern, R. M. (1977), *A Chemical, Physical and Biological Assay of Welding Fume*, The Danish Welding Institute, Copenhagen, Denmark.

Stern, R. M. (1983) in *Health Effects of Combined Exposures to Chemicals in Work and Community Environments. Proceedings of a Course by the European Cooperation on Environmental Health Aspects of the Control of Chemicals*, Lodz, Poland, World Health Organization, Copenhagen, October 1982, pp. 18–22

Stern, R. M., Berlin, A., Fletcher, A. C., and Jarvisalo, J., Eds. (1986), *Health Hazards and Biological Effects of Welding Fumes and Gases*, Excerpta Medica, Amsterdam.

Stern, R. M. (1987), *Environ. Health Perspect.,* **76**, 221–229.

Stokinger, H. E. (1984), *Am. Ind. Hyg. Assoc. J.*, **45**, 127–133.

Strizkerskiy, I., (1961), *Weld. Prod.*, **7**, 40.

Stuchly, M. A. and Lecuyer, D. W. (1989), Health Phys., **56**, 297–302.

TWI (1986), *The Facts About Fume, A Welding Engineers' Handbook*, The Welding Institute, Cambridge, U.K.

Ulfvarson, U. (1981), *Scand. J. Work Environ. Health*, **7** (Suppl. 2), 1–28.

Ulfvarson, U., (1986), in *Health Hazards and Biological Effects of Welding Fumes and Gases*, R. M. Stern, A. Berlin, A. C. Fletcher, and J. Jarvisalo, Eds., Excerpta Medica, Amsterdam, pp. 133–136.

Vaccari, J. A. (1992), Am. Mach., March 1992, 37–48.

van der Wal, J. F. (1985), *Ann. Occup. Hyg.*, **29**, 377–389.

van der Wal, J. F., (1986), *Ann. Occup. Hyg.*, **30**, 153–161.

van der Wal, J. F., (1990), *Ann. Occup. Hyg.*, **34**, 45–54.

Vanderwert, T. L., (1984), *Mach. Des.*, May 10, 1984, 96–100.

Waterman, L. S., Purnell, C. J., and Anderson, P. W. P. (1990), *Ann. Occup. Hyg.*, **34**, 97–99.

Wiseman L. G. and Chapman, E. T. (1986), in *Health Hazards and Biological Effects of Welding Fumes and Gases*, R. M. Stern, A. Berlin, A. C. Fletcher, and J. Jarvisalo, Eds., Excerpta Medica, Amsterdam, pp. 133–136.

CHAPTER 11

Heat Treating

11.1 INTRODUCTION

Heat treating techniques for metals are available to improve the strength and hardness of both ferrous and nonferrous alloys. This discussion is limited to the heat treating of steel, since this is by far the most common application. The procedures used for steel illustrate the equipment, materials, and hazards for most heat treating operations. Heat treating facilities are operated by either independent companies specializing in job shop work or captive facilities which may be an integral part of a complete manufacturing process. There are no firm figures on the work population in heat treating, nor has a comprehensive epidemiologic study of the health status of these workers been completed.

The metallurgical basis for heat treating will not be covered since this information is available elsewhere (Unterweiser et al., 1992). For our purposes it will suffice to say that anything that changes the crystal lattice of the metal will cause it to harden. Two general methods of effecting such a change are practiced in industry. If a workpiece made from medium carbon steel is heated above a critical temperature, a phase change occurs and on cooling a new structure evolves with increased strength and hardness. In a second technique, low carbon steel parts can be hardened by the addition of carbon or nitrogen to the metal surface in an atmosphere furnace. These "foreign" atoms change the crystal lattice and increase the ability of the steel to harden.

Although heat treating processes are available to harden the entire mass of the part, this is not normally required. The common processes merely harden the surface of the workpiece; this process is called case hardening. The temperatures and special environments necessary for heat treating are obtained with a variety of furnaces and baths. In addition to hardening techniques, several softening processes are used to refine the grain of the metal and achieve uniformity in its metallurgical properties. The most common of these processes, also done in furnace or bath environments, are grouped under the heading of annealing. The removal of heat or quenching of the workpiece as a part of the hardening and annealing process is critical in defining the final properties of the metal. A number of quenching techniques using air, gas, and fluid media are utilized in heat treat shops.

11.2 CASE HARDENING

Case hardening, the production of a hard surface or case on the workpiece, is normally accomplished by the diffusion of carbon or nitrogen into the surface of the metal workpiece. The thickness of the hardened case may be 2.5–6.4 mm (0.10–0.25 in.). The process may be done in air, in atmospheric furnaces, or in salt baths using a variety of carburizing or cyaniding methods. The processes may be completed in batch or continuous mode and take from 1–20 hr to complete depending on the metal, the process, and the desired thickness of the case.

11.2.1 Carburizing

11.2.1.1 Gas Carburizing. Several gas carburizing processes are available to add carbon to the steel surface. In all of these techniques the workpiece is held in a furnace containing high concentrations of carbon monoxide, the source of the diffused carbon, at temperatures of 870–980°C (1600–1800°F). The heat treating furnace atmospheres used in gas carburizing are classified as shown in Table 11.1. An endothermic gas furnace atmosphere (Class 300) is formed in a gas cracker by mixing air with natural gas or propane over a heated catalyst to form a mixture of 40% nitrogen, 20% carbon monoxide, and 40% hydrogen. In another cracking process, a Class 100 exothermic gas is generated by passing a partially burned gas–air mixture over a catalyst. The furnace gas formed has the composition of 12% hydrogen, 10% carbon monoxide, 5% carbon dioxide, and the balance of nitrogen. The atmospheres normally used in gas carburizing are Classes 100, 300, 400, and 500. Carbon monoxide must be regulated closely to achieve concentrations that permit carbon to diffuse, but that do not scale or disfigure the steel. After processing in the furnace, the carbon concentration in the case of a mild steel workpiece may increase from the original 0.1% to 1.2%; it is subsequently quenched at the proper temperature to achieve the desired hardness. The safe operation of heat treating furnaces is discussed elsewhere (FM, 1991; NFPA, 1991).

TABLE 11.1 **Heat Treating Furnace Atmospheres**

Class No.	Generation Technique	Typical Composition (%)
100	Combustion of hydrocarbons in air	70–80%N_2, balance CO, CO_2, H_2
200	Remove CO_2 and water from Class 100	97%N_2
300	Partial reaction of fuel gas and air with heat and catalyst to crack hydrocarbons	40%N_2 20%CO 40%H_2
400	Air passed over incandescent charcoal	65%N_2 35%CO
500	Burn fuel gas and air, remove water vapor, convert CO_2 to CO	—
600	Raw NH_3, dissociated NH_3, or burned NH_3	75%H_2 25–99%N_2

11.2.1.2 Pack Carburizing. In pack carburizing the workpiece is placed in a metal box and covered with an organic carburizing compound. The box is sealed with a gas-tight top and processed through a furnace at the desired temperature. The carbonaceous material thermally degrades to produce a carbon monoxide gas blanket which diffuses into the metal workpiece. The parts are then quenched to complete the hardening process. Retort carburizing is similar to pack carburizing except that the carbonaceous fuel is not in direct contact with the part.

11.2.1.3 Liquid Carburizing. Liquid carburizing is achieved by immersing the workpiece in a molten salt bath (Figure 11.1) containing sodium or potassium cyanide or cyanate, sodium or potassium chloride, and barium chloride, as noted in Table 11.2 (WHTC, 1981). Since this procedure adds some nitrogen to the surface in addition to the carbon, it is not strictly a carburizing process. A small salt bath line operating with an overhead crane for material transport is shown in Figure 11.2.

11.2.1.4 Health Hazards. The principal occupational health hazard in gas carburizing is the exposure to carbon monoxide. Since carbon monoxide concentrations in the furnace may be as high as 40%, small leaks result in significant workroom exposure. In my own experience, air concentrations of carbon monoxide in excess of 100 ppm occur in carburizing installations. In addition, if the parts are not clean, volatile material will be driven off in the furnace and generate toxic air contaminants that may leak into the workplace. The salt bath techniques for carburizing involve a series of potential health hazards that are discussed in Section 11.2.3.

11.2.2 Gas Nitriding

Gas nitriding is a common way of case hardening by the diffusion of nitrogen into the metal surface. This process utilizes a Class 600 furnace atmosphere of ammonia operating at 510–570°C (950–1050°F), as shown in Table 11.1. Anhydrous ammonia passes over a catalyst in a cracking unit; the ammonia dissociates, releasing 25% nitrogen and 75% hydrogen which forms the furnace environment. This operation may be quite slow with operating times of 10–20 hr.

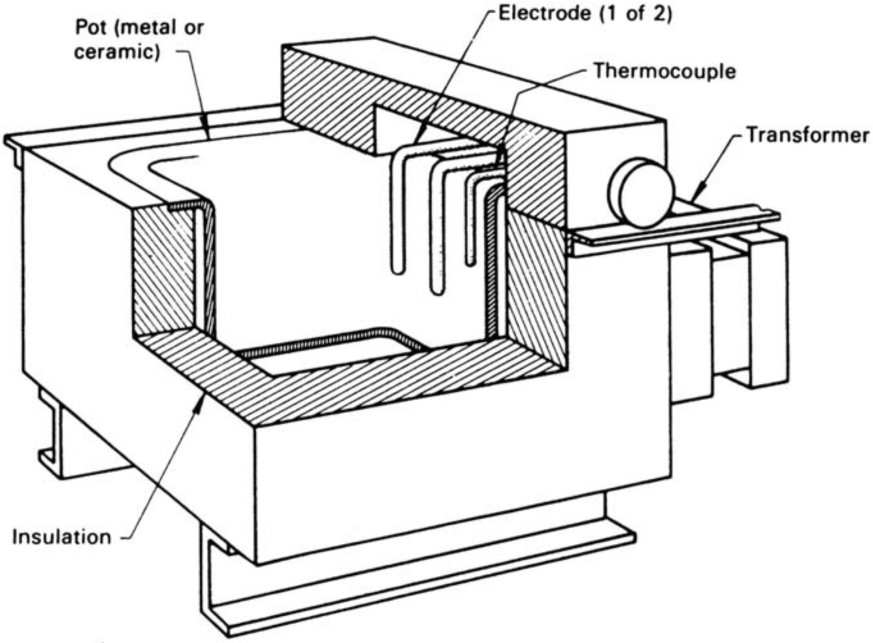

Figure 11.1 Salt bath used in heat treating.

The handling of ammonia presents potential fire, explosion, and toxicity hazards. Equipment leaks present major potential health hazards and require written emergency plans including control actions and respiratory protection. Hydrogen is obviously a fire and explosion risk. Fire safety of heat treating furnaces is discussed elsewhere (FM, 1991; NFPA, 1991).

Ion nitriding is applied to hardening gears and other automotive parts (Anon., 1981). The workpiece is loaded in a vacuum vessel or tank with a low pressure nitrogen atmosphere. Under a high-voltage dc field with the vessel wall as the anode, nitrogen ions are accelerated to the workpiece (cathode) forming a nitrided hardened case. Since the operation is conducted in an enclosure under vacuum, it presents limited hazards.

11.2.3 Cyaniding

Carbon and nitrogen can be added to the surface of the workpiece by liquid cyaniding, that is, immersion of the workpiece in a cyanide salt bath with a subsequent quench. The workpiece is held in a bath consisting of active compounds of sodium and potassium cyanide in addition to sodium chloride, which is an inert carrier (Table 11.2). The bath is operated at temperatures above 870°C (1600°F) and parts are immersed for 30–60 min.

Cyanide compounds apparently are not released, although there are no citations in the open literature confirming this fact. Local exhaust or dilution ventilation is

TABLE 11.2 Composition of salt baths

Constituent	Sodium/ potassium cyanide	Sodium/ potassium cyanate	Lithium carbonate	Sodium carbonate	Lithium chloride	Sodium/ potassium chloride	Barium chloride	Potassium nitrate	Sodium nitrite	Sodium nitrate	Sodium hydroxide	Sulphur
Chemical symbol	NaCN KCN	NaCNO KCNO	Li_2CO_3	Na_2CO_3	LiCl	NaCl KCl	$BaCl_2$	KNO_3	$NaNO_2$	$NaNO_3$	NaOH	S
Carburizing	√	√		√		√	√					
Nitriding	√	√	√		√							
High-temperature neutral						√	√					
Low-temperature neutral								√	√	√		

Source: Adapted from WHTC (1981).

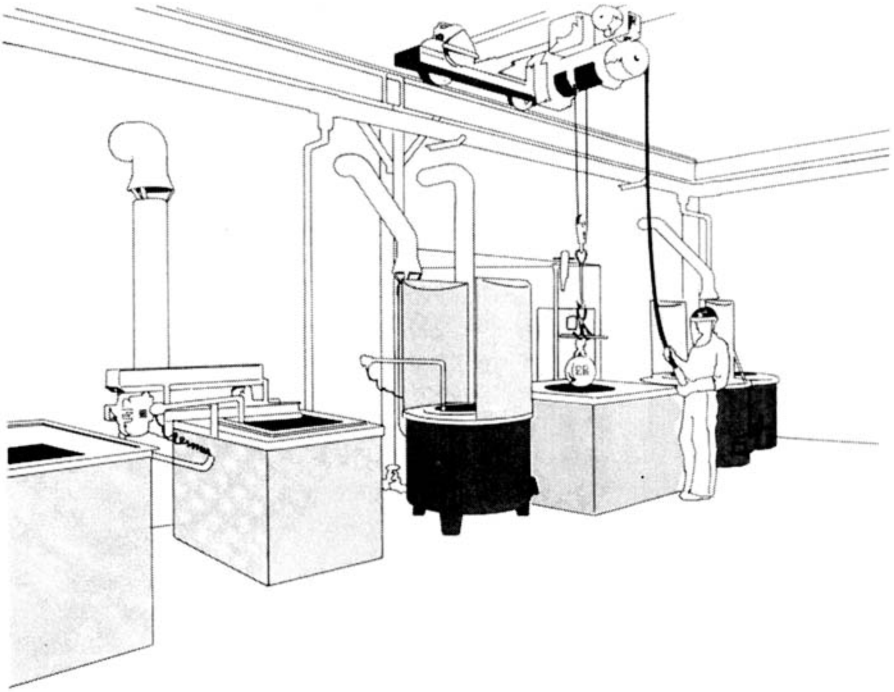

Figure 11.2 Typical salt bath line. Source: Courtesy of Wolfson Heat Treatment Centre, Birmingham, England.

frequently applied to this process, although standards have not been proposed. The handling of cyanide salts requires the same precautions as those noted in Chapter 13, including secure and dry storage, isolation from acids, and planned disposal of waste (WHTC, 1981). Care must be taken in handling quench liquids since cyanide salt residue on parts will, in time, contaminate the quench liquid. If the quench tank is a multipurpose tank, cross contamination can occur. The most serious result of cross contamination is the introduction of acid into a tank contaminated with cyanide salt, resulting in the formation of hydrogen cyanide.

11.2.4 Carbon Nitriding

In this furnace process both carbon and nitrogen are added to the workpiece surface. An endogas generator is used with the addition of 5% natural gas as a source of carbon and 5% ammonia as a source of nitrogen.

11.2.5 Other Processes

Small specialty parts such as gears may be heat treated by direct flame using an oxyacetylene or methylacetylene–propadiene torch impinging on the selected area to be hardened. Induction heating is also widely used for high production of small parts with well-defined surface geometry. The workpiece is heated by secondary current induced in the part, as discussed in Section 8.6.1.

Although its production use is limited at this time, extensive research is under way on the application of low-power lasers to heat treating (Grum and Zerovnik, 1993). Since the absorption of laser light by metal surfaces is poor, it is necessary to coat the surface with an absorbing material. The health hazards of this hardening process are those associated with operating the laser and the air contamination produced by the possible degradation of the coating.

11.3 ANNEALING

Annealing is a general term used to cover many heating and cooling cycles designed to modify the metallurgical properties of the workpiece. The annealing sequence is frequently characterized by slow cooling. A range of salt bath procedures are available. Low temperature salt baths operating in the range of 538°C (1000°F) are a blend of potassium nitrate, sodium nitrite, and sodium nitrate (Table 11.2). High-temperature neutral baths containing sodium and potassium chloride and barium nitrite are used for steel. Baths are identified as neutral if no chemical reaction takes place and the bath merely brings the metal parts to temperature. For annealing of stainless steel and nickel–chrome alloys, baths of sodium and potassium chloride with barium chloride are operated at 844–1177°C (1550–2150°F).

Rigorous storage and handling precautions are necessary for nitrate salt baths since these salts are powerful oxidizing agents. Nitrate salts will start to decompose at 400°C (750°F); at 650°C (1200°F) the decomposition may be violent, with the release of oxides of nitrogen. The bath container itself may be destroyed under such conditions, releasing the contents to the workplace with catastrophic fire and explosion potential if the hot nitrate salts contact organic materials such as carbon or grease.

11.4 QUENCHING

Controlled cooling or quenching is necessary after furnace and salt bath processes. The quench baths may be water, oil, molten salt, liquid air, or brine. Commercial quenching oils are based on refined mineral oils or animal or vegetable fatty oils with the addition of emulsifiers, accelerators, and antioxidants. Tank agitators must be used to provide uniform quench temperature and, therefore, even cooling. Heat exchangers are frequently required on quench tanks on high production lines to limit the temperature rise. Work practices similar to those practiced on electroplating rinse tanks must be followed to minimize drag-out. Oil quenchants may cause air contamination from thermally and mechanically generated mists and from thermal decomposition of the oil. A fire hazard exists because of the low flash point of the oils and splashes from high-temperature salt baths. Local exhaust ventilation is necessary on production oil quench tanks.

Water or water–brine quench tanks are used with proprietary additives which include nitrates, nitrites, hydroxides, and corrosion inhibitors. Aqueous polymer quenchants have been used widely as alternatives to straight oils to eliminate the fire hazard. These materials have also been used as diluents in conventional water quench tanks to improve uniformity in cooling. The four water-soluble organic polymers used in quenching are polyvinyl alcohols, polyvinyl pyrrolidones, acrylates, and polyalkylene glycol polymers; the last is the one most commonly used in the United States. These materials are used in open-tank quenching of steels and patenting of steel wire and rod. In fiberglass manufacturing plants, occupational asthma is prevalent, apparently due to the high concentration of endotoxin in the rinse water which becomes airborne as mist. The operating conditions in heat treating are similar, suggesting that endotoxin concentrations in quench water and airborne mist should be evaluated.

Certain quench operations must be done in an enclosure with inert circulating gases (i.e., helium, argon, and nitrogen). Gas pressure quenching is chosen for work that requires slow cooling rates, thus minimizing distortion while eliminating the need for degreasing. The hazards in these operations are those associated with all inert environments and include confined space entry concerns.

Patenting, a special annealing process for thin cross-sectional parts such as wire, uses a molten lead bath operating at 250–330°C (485–620°F). At the lower temperature the vapor pressure of molten lead results in a saturated concentration of 0.18 mg/m^3; at 330°C (620°F) it is 11.3 mg/m^3 or roughly 200 times the current TLV. Elkins (1959) has confirmed the potential health hazards from this operation.

11.5 CONTROL OF HEALTH HAZARDS

The principal problems in heat treating operations are due to the special furnace environments, especially those with atmospheres based on carbon monoxide, and the special hazards from handling nitrate and cyanide bath materials. Although the hazard potential is significant from these operations, few data are available. In the only published data on air contaminants in metal annealing and hardening operations, Elkins (1959) noted hazardous concentrations of carbon monoxide in 19 out of 108 installations, and 59 out of 167 air samples for lead exceeded 0.20 mg/m^3.

To control fugitive emissions from carburizing operations, the various combustion processes must be closely controlled, furnaces maintained in tight condition, dilution ventilation installed to remove fugitive leaks, and furnaces provided with flame curtains at doors to control escaping gases. Operating instructions should mandate the use of self-contained breathing apparatus for repair operations (NFPA, 1991).

Temperature controls on salt baths must be reliable and the bath must be equipped with automatic shutdown features. Before it is brought down to room temperature, rods should be inserted into the bath. When withdrawn, these rods provide vent holes to release gases when the bath is again brought up to temperature. If this is not done and gas is occluded in the bath, explosions or blowouts may occur. All workpieces must be clean and dry before immersion in the nitrate bath since residual grease, paint, and oil may cause explosions. Workpieces based on alloys containing more than a few percent magnesium should not be processed in these baths. Nitrate salt storage should be in a locked, secure area that is dry and free of organic material. A range of air contaminants may occur in workplaces with salt baths (Table 11.3); the baths may require local exhaust ventilation, although no design data are available. Where sprinkler systems are used, canopies should be erected above all oil, salt, and metal baths to prevent water from cascading into them. Any worker who happened to be adjacent to a hot bath when water struck it would be in grave danger.

An excellent series of pamphlets on heat treating has been issued by the Wolfson Heat Treatment Centre in the United Kingdom (WHTC 1981, 1983, 1984). These bulletins provide detailed information on the health and safety hazards associated with individual processes, the requirements for storing and handling salts, and the selection of personal protective equipment, as well as a range of valuable information for both the operator and the health and safety specialist.

Lead baths used for special quenching operations (i.e., patenting) are frequently operated at temperatures between 540°C (1000°F) and 820°C (1500°F), therefore requiring local exhaust ventilation. Significant lead exposures may occur during operation and when removing the surface oxidation or dross floating on this molten lead.

Oil quench tanks are often ventilated to remove the irritating smoke that evolves during their use. Some tanks have cooling coils to control the temperature of the oil and to reduce both smoke production and the fire hazard. There are no ventilation standards published for these operations. General exhaust is always necessary to handle fugitive losses from equipment and to dump the heat load.

The physical hazards in heat treating are those seen with furnace and oven processes, namely, heat stress due to both metabolic and radiant load and noise from mechanical equipment and combustion air. The noise levels in heat treating shops range from TWAs of 85–95 dBA. The principal sources include fans, com-

TABLE 11.3 Air Contaminants from Salt Baths

Contaminant	Source
Hydrogen sulfide	Cross contamination between acid pickling baths
Methyl chloride	Regeneration of salt baths
Oil mist	Quench oil, residue from machining fluids, corrosion-preventive coating
Silicon tetrachloride	Regeneration of salt baths
Sodium nitrate	Low-temperature salt baths
Potassium nitrate	Low-temperature salt baths
Sodium hydroxide	Low-temperature salt baths
Nitrogen dioxide	Acid contamination of nitrate–nitrite baths

Source: Adapted from WHTC (1981).

pressors, pumps, burners, and conveying equipment. A hearing conservation program must be established in these facilities. The heat stress incurred in heat treating shops will be governed by the type of equipment in use, the density of the equipment, and the work load. Diagnostic measurements are necessary to identify the relative contribution of metabolic, convection, and radiation loads. If radiation is a significant contributor, shielding can be an effective control.

Personal protective equipment for heat treating is well described in the Wolfson Heat Treatment Centre reports (WHTC, 1984). Eye protection for IR radiation from furnaces, baths, and ovens requires both fixed and portable screens complemented with goggles and face shields. Heavy gloves and gauntlets must be available in addition to reflective clothing for furnace repair jobs and flameproof garments for protection against molten salt splashes.

REFERENCES

Anon. (1981), *Mach. Des.*, April 23, 1981, 16–17.

Elkins H. P. (1959), *The Chemistry of Industrial Toxicology*, Wiley, New York.

FM (1991), Factory Mutual Loss Prevention Data Sheet 6-10, May 1991, Norwood, MA.

Grum, J. and Zerovnik, P. (1993), *Heat Treating*, July, 16–20.

NFPA (1991), NFPA 86C, Standard for Industrial Furnaces Using a Special Processing Atmosphere, National Fire Protection Association, Quincy, MA.

Unterweiser, P. M., Boyer, H. E., and Kubbs, J. J. (1992), *Heat Treaters Guide—Standard Practices and Procedures for Steel*, American Society for Metals, Materials Park, OH.

WHTC (1981), *Guidelines for Safety in Heat Treatment, Part 1, Use of Molten Salt Baths*, Wolfson Heat Treatment Centre, University of Aston, Gosta Green, Birmingham England.

WHTC (1983), *Guidelines for Safety in Heat Treatment, Part 2, Health and Personal Protection*, Wolfson Heat Treatment Centre, University of Aston, Gosta Green, Birmingham England.

WHTC (1984), *Guidelines for Safety in Heat Treatment, Part 3, Quenching, Degreasing, and Fire Safety*, Wolfson Heat Treatment Centre, University of Aston, Gosta Green, Birmingham England.

CHAPTER 12

Nondestructive Testing

12.1 INTRODUCTION

With the increased developments in manufacturing technology in the last decade of the twentieth century, a need has arisen for in-plant inspection techniques. The most common procedures now in use in the metalworking industries are discussed in this section.

12.2 INDUSTRIAL RADIOGRAPHY

Radiography is widely used in industry for the examination of metal fabrications such as weldments, castings, and forgings. There are about 10,000 radiographic installations in the United States employing 40,000–50,000 technicians. Specially designed shielded cabinets may be located in manufacturing areas for in-process fluoroscopic examination of parts. Large components may be transported to shielded rooms for examination. Radiography may be performed in open shop areas, on construction sites, on board ships, and on pipelines.

The process of radiography consists of exposing the object to be examined to X rays or gamma rays from one side and measuring the amount of radiation that emerges from the opposite side. This measurement is usually made with film or a fluoroscopic screen to provide a visual, two-dimensional display of the radiation distribution and any subsurface porosities.

The process is used to locate inconsistencies in the object or part. As radiation passes through the part, some of the radiation is absorbed or attenuated. The degree of attenuation depends on the thickness of the part, its density, and its atomic number. For example, metal castings frequently contain subsurface porosities. These can be found by radiography because the radiation passing through the section of the casting containing the porosity will be attenuated to a lesser degree than the radiation passing through a solid section of the casting, as shown in Figure 12.1. This difference in attenuation of the radiation results in differences in optical density in the processed film.

The principal potential hazard in industrial radiography is exposure to ionizing radiation. This section deals with the minimum safety precautions designed to minimize worker exposure to radiation (X rays and gamma rays) sources.

12.2.1 X-Ray Sources

The X rays used in industrial radiography are produced electrically and therefore fall into the category of "electronic product radiation." The most commonly used source of X rays is the conventional X-ray generator. This device consists of an evacuated tube in which electrons are accelerated through a high-potential difference from a cathode to an anode. The anode contains a target fabricated from a material of relatively high atomic number (usually tungsten). As electrons impinge on the target, they rapidly decelerate, producing bremstrahlung (German for "braking") radiation (X rays). Conventional X-ray generators used in industrial radiography produce peak X-ray energies from 40 to 420 keV.

The X ray tube is housed in a tube head or X-ray head, as shown in Figure 12.2. This head also contains high-voltage transformers and insulating material. Many industrial X-ray tube heads have integral lead shielding to reduce the radiation intensities in directions other than the direction of interest. Table 12.1 lists

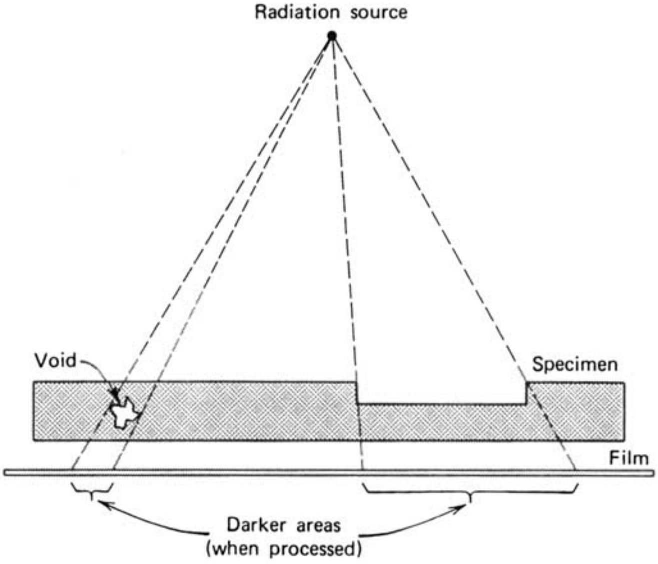

Figure 12.1 Basic radiographic process.

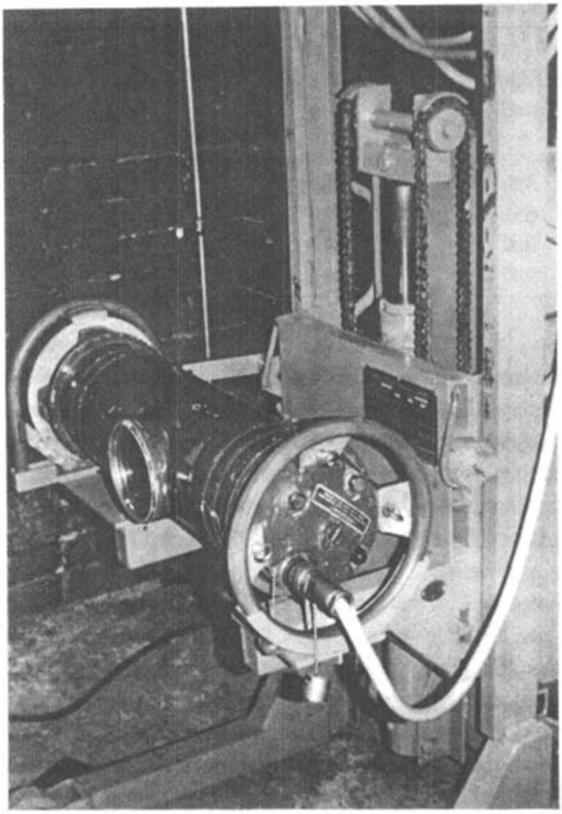

Figure 12.2 An X-ray head.

typical radiation intensities produced by conventional industrial X-ray generators. This table also lists typical sizes and weights for these tube heads. The control panel contains X-ray energize and deenergize switches, usually an "X-ray on" indicator, panel meters that indicate the tube potential and tube current, and the means for adjusting these parameters. The control panel and interconnecting cable to the tube head allow the operator to energize the X-ray tube from a remote location to minimize radiation exposure.

Higher-energy X rays are generated by Van de Graaf accelerators (up to a few MeV), linear accelerators (up to approximately 10 MeV), and betatrons (up to 25 MeV). In these devices, X rays are also produced by accelerating electrons. However, the method of accelerating these electrons differs among devices. Van de Graaf accelerators are used fairly widely in industrial radiography, although they are much less common than conventional X-ray generators.

Because of the size, weight, and services required, it is difficult to position conventional X-ray generators and accelerators to perform radiography in field locations. Consequently, these devices are used most widely in fixed installations such as shielded exposure rooms or in specially designed cabinets.

TABLE 12.1 Characteristics of Typical Industrial X-ray Generators

Tube Potential (kv)	Length (mm)	Diameter (mm)	Mass (kg)	Dose Rate at 1 m from Focal Point (R/hr)
160	580	188	30	560
200	651	221	47	900
250	900	243	78	1300
300	1000	263	103	1400

The design and manufacture of industrial X-ray generators are regulated by the Center for Devices and Radiological Health of the Food and Drug Administration (FDA, 1988). The American National Standards Institute has developed a standard for the design and manufacture of these devices (ANSI, 1989). These standards specify maximum allowable radiation intensities outside the useful beam. They require warning lights on both the control panel and the tube head to indicate when X rays are being generated.

The use of industrial X-ray generators is regulated by OSHA. Additionally, many states regulate the use of industrial X-ray generators within their own jurisdictions. Areas in which radiography is performed must be posted with signs that bear the radiation caution symbol and a warning statement (Figure 12.3). Access to these areas must be secured against unauthorized entry. Occasionally, radiation exposures occur to nonradiographic personnel because they unknowingly enter radiography areas. When radiography is being performed in open manufacturing areas, it is essential to instruct other workers in the identification and meaning of these warning signs to minimize these occurrences.

Radiographic operators are required to wear personal monitoring devices to measure the magnitude of their exposure to radiation. Typical devices are film badges, thermoluminescent dosimeters, and direct reading pocket dosimeters. It is also advisable for radiographic operators to use audible alarm dosimeters or "chirpers." These devices emit an audible signal or "chirp" when exposed to radiation. The frequency of the signal is proportional to the radiation intensity. They are useful for warning operators who unknowingly enter a field of radiation.

The operators must be trained in use of radiation survey instruments to monitor radiation levels to which they are exposed and to assure that the X-ray source is turned off at the conclusion of the operation. A wide variety of radiation survey instruments is available for use in industrial radiography. When using industrial X-ray generators, especially relatively low-energy generators, it is imperative that the instrument has an appropriate sensitivity range for measuring the energy of radiation used.

Radiation exposure is not the only potential hazard associated with industrial X-ray generators. These devices use high-voltage power supplies for the production of X rays, and consideration must be given to the electrical hazards associated with using this equipment.

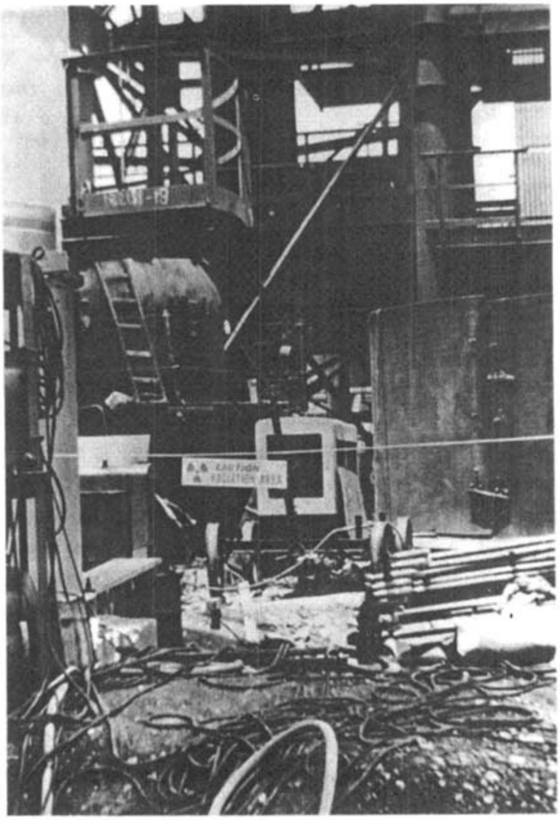

Figure 12.3 Posting of area for radiography.

12.2.2 Gamma-Ray Sources

Gamma rays used in industrial radiography are produced as a result of the decay of radioactive material. The principal radioisotopes used in industrial radiography are iridium-192 and cobalt-60. Other radioisotopes, such as ytterbium-169 and thulium-170, are much less common but have some limited applicability. Radioisotope sources produce gamma rays with discrete energies as opposed to the continuous spectrum of energies produced by X-ray generators. Owing to radioactive decay, the activity of radioisotope sources decreases exponentially with time. Consequently, the radiation intensities from these sources similarly decrease. Table 12.2 lists the typical physical parameters of these sources. Typical radiographic sources contain up to 200 Ci of iridium-192 and up to 1000 Ci of cobalt-60.

Unlike X-ray generators, radioisotope sources require no external source of energy, which makes their use attractive for performing radiography in remote locations, such as on pipelines. Since they are not energized by an external power supply, these sources cannot be "turned off," and they continuously emit gamma rays. For this reason, certain additional safety precautions must be exercised.

TABLE 12.2 Characteristics of Typical Radiographic Radioisotopes

Isotope	Half-Life	Principal Photon Energies (keV)			Dose Rate at 1 m from 1 Ci (R/hr)
^{192}Ir	74 days	310	468	608	0.55
^{60}Co	5.3 years	1170	1330		1.3
^{169}Yb	30 days	60	110	131	0.125
		177	198		
^{137}Cs	30 years	660			0.32

In industrial radiographic sources, the radioisotope is sealed inside a source capsule that is usually fabricated from stainless steel. The radioisotope source capsule is stored inside a shielded container or "pig" when not in use to reduce the radiation intensities in the surrounding areas. These containers weigh up to 50 lb for housing iridium-192 sources and up to several hundred pounds for cobalt-60 sources. A flexible tube is attached to the storage container with a source stop at the end of the tube (Figure 12.4). The source stop is positioned at the irradiation location by the operator, and the radioisotope source is transferred through the flexible tube to the source stop by means of remote handling equipment. This remote handling equipment allows the operator to be as far as 17 m (50 ft) from the source in order to minimize his or her radiation exposure. At the conclusion of the radiographic exposure, the operator remotely retracts the source from the source stop to the shielded position in the exposure device. As already noted, radioisotope sources are generally favored for use in field construction sites or cramped environments such as shipboard, because positioning the lightweight source stop is more convenient than positioning an X-ray generator.

The design, manufacture, and use of radioisotope sources and exposure devices for industrial radiography are regulated by the U.S. Nuclear Regulatory Commission. However, the Nuclear Regulatory Commission has entered into an agreement with 26 states that allows these "Agreement States" to regulate radioisotope radiography within their jurisdictions. Organizations that wish to perform radioisotope radiography must obtain a license from either the Nuclear Regulatory Commission or the Agreement State. In order to obtain this license, they must describe their safety procedures and equipment to the licensing authority.

Radiographic operators must receive training as required by the regulatory bodies, including instruction in their own organization's safety procedures, a formal radiation safety training course, and a period of on-the-job training where the individual works under the direct personal supervision of a qualified radiographer. At the conclusion of this training, the operator must demonstrate his knowledge and competence to the licensee's management.

Areas in which radiography is being performed must be posted with radiation warning signs, and access to these areas must be secured as described earlier. An operator performing radioisotope radiography must wear both a direct-reading pocket dosimeter and either a film badge or a thermoluminescent dosimeter.

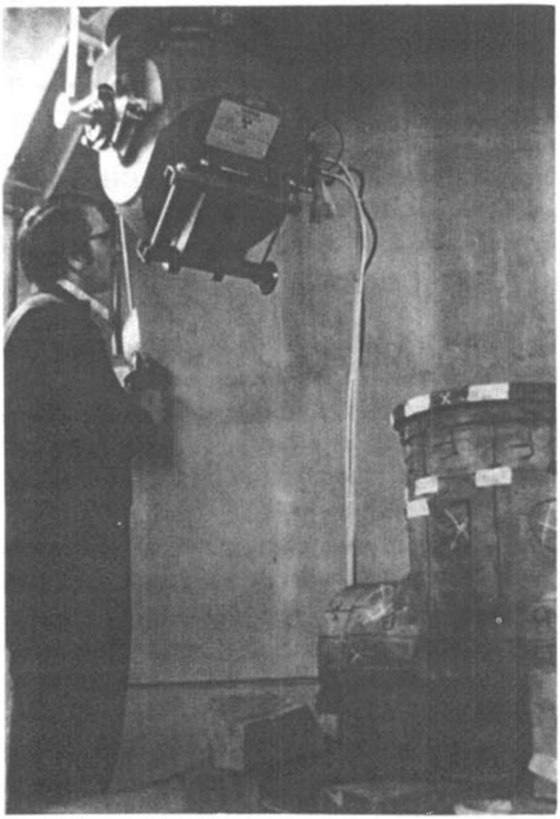

Figure 12.4 Radioisotope storage unit.

Additionally, the operator must use a calibrated radiation survey instrument during all radiographic operations. To reduce the radiation intensity in the area after an exposure, the operator must retract the source to a shielded position within the exposure device. The only method available to the operator for assuring that the source is shielded properly is a radiation survey of the area. The operator should survey the entire perimeter of the exposure device and the entire length of guide tube and source stop after each radiographic operation to ensure that the source has been fully and properly shielded.

Occasional radiation exposure incidents have occurred in industrial radioisotope radiography. These incidents generally result because the operator fails to properly return the source to a shielded position in the exposure device and then approaches the exposure device or source stop without making a proper radiation survey. The importance of making such a survey at the conclusion of each radiographic exposure cannot be overemphasized.

The frequency of radiation exposure incidents may be reduced through the use of audible alarm dosimeters. As described earlier, these devices emit an audible signal when exposed to radiation. In cases where operators have not properly shielded sources and fail to make a proper survey, the audible alarm dosimeter might alert the operator to abnormal radiation levels. Additionally, some current types of radiographic exposure devices incorporate source position indicators that provide a visual signal if the source is not stored properly. Use of these devices may also reduce the frequency of radiation exposure incidents.

A Nuclear Regulatory Commission Interim Notice (NRC, 1987) provides an excellent summation of the responsibilities of a licensee for a radiation safety program. If a facility contracts with an independent firm to conduct certain inspections on its site, that licensee must:

1. Assure that all radiographers and radiographers' assistants meet the training criteria specified in 10 CFR 34.31.
2. Assure that the number of trained radiographers and radiographers' assistants sent to each work location is sufficient to perform the radiographic operations, perform all required surveys, and maintain direct surveillance of all access points to high-radiation areas.
3. Conduct on-site audits of each radiographer and radiographer's assistant, as required by 10 CFR 34.11(d) and specific license conditions.
4. Assign a qualified, experienced radiographer to be responsible for radiation safety at each field office and continuing job site. This individual would have the authority to suspend any activity not in compliance with NRC regulations or the license.
5. Require that a person responsible for radiation safety at each field office and continuing job site forward records to the corporate headquarters for prompt review and follow-up, if warranted.
6. Review, evaluate, and report all incidents that may have caused personnel exposures in excess of the limits stated in 10 CFR 20.101, 20.104, or 20.105.

12.3 MAGNETIC PARTICLE INSPECTION

This procedure is suitable for detecting surface discontinuities, especially cracks, in magnetic materials. The procedure is simple and of relatively low cost; as a result, it is widely applied in metal fabrication plants.

The ferromagnetic particles are applied to the surface of the metal part by an air powder gun or by dipping in a bath containing the particles suspended in a light petroleum oil similar to mineral spirits or water. If the material or part is then subjected to an induced magnetic field by a low-voltage, high-current power supply (2–16 V, 100–1000 A), the magnetic particles will be attracted to any surface discontinuity and will deposit on its edges, thereby defining its geometry (Figure 12.5). If the magnetic particles are designed to fluoresce, they can be identified by UV irradiation using a mercury vapor lamp. The lamp is provided with a filter which passes only UV-A (320–400 nM); these wavelengths do not cause photokeratitis or erythema. Particles may also be designed for direct visualization in the visible range.

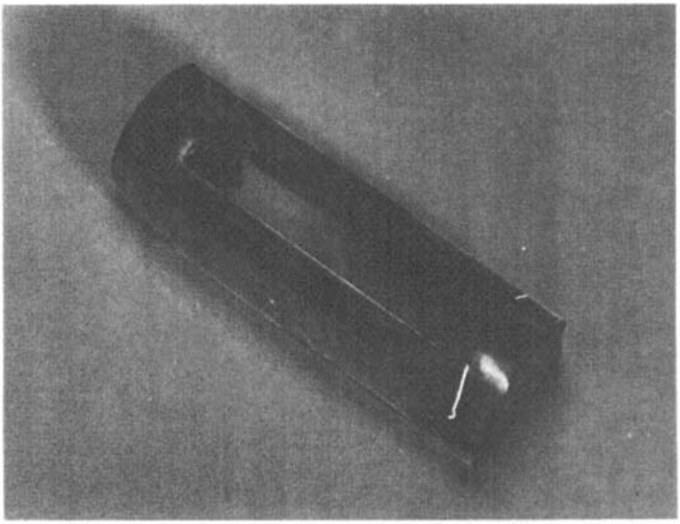

Figure 12.5 Magnetic particle inspection. Source: Courtesy of Magnaflux Corporation, Chicago, IL.

Worker exposures using this technique are minor, consisting of skin contact and minimal air contamination from the suspension fluid and exposure to the magnetic field during the inspection process. General exhaust ventilation is adequate for vapors from the liquid carrier; gloves, apron, and eye protection should be used to minimize skin and eye contact. A proper filter on the UV lamp minimizes exposure to UV-B radiation. The hazard from the magnetic field has not been studied.

12.4 LIQUID PENETRANT INSPECTION

This procedure complements magnetic particle inspection for surface cracks and weldment failures because it can be used on nonmagnetic materials. Either fluorescent or visible dyes are suspended in a liquid carrier that is applied to the surface of the part by brushing, dipping, or spraying. If there are any surface imperfections, the penetrant is drawn into the opening by capillary action. Excess dye is drained off, the part is rinsed clear, and a dry absorbent powder is applied by dusting or dipping. The penetrant residing in the imperfection "weeps" into the powder and is identified clearly by direct viewing if a visible dye is used or with a UV lamp in a dark room in the case of a fluorescent dye (Figure 12.6).

Diverse materials are used as dyes and carriers. Data are not available in the open literature on the composition of these materials. The dyes are commonly "taken up" in a low-volatility petroleum oil and the absorbent is stated to be a nuisance dust by the manufacturer. In neither case do significant exposures occur; however, it is wise to obtain manufacturer's information on the specific materials in use in the system.

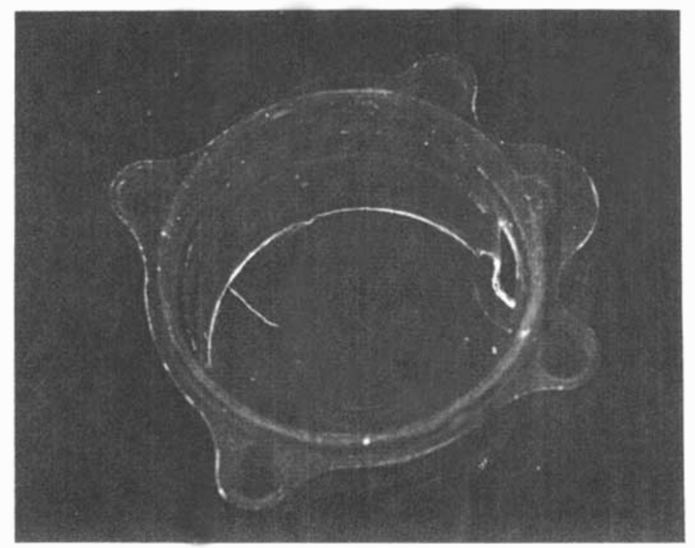

Figure 12.6 Fluorescent penetrant inspection. Source: Courtesy of Magnaflux Corporation, Chicago, IL.

12.5 ULTRASONIC INSPECTION

Pulse-echo and transmission-type ultrasonic inspection have a wide range of application for flaw detection and structural analysis. This procedure resolves voids much smaller than all other methods, including radiographic procedures. Ultrasound waves from a transducer placed on the part travel through the structure; any discontinuity or surface will reflect the pulses back to a transducer for display on a CRT. The procedure commonly involves immersing the part in a fluid to improve coupling between the ultrasound transmitter/receiver and the workpiece. Exposures to ultrasound energy may occur by air transmission or by direct contact with the part or the coupling fluid. The reported response on other applications of higher energy ultrasound systems include local heating and subjective effects; an ACGIH TLV is available for upper sonic to ultrasound (10–50 kHz). Health effects have not been reported on the application of ultrasound to the nondestructive testing of metals.

REFERENCES

ANSI (1989), *Radiological Safety Standard for the Design of Radiographic and Fluoroscopic Industrial X-ray Equipment*, (NBS 123), ANSI N 43.5-1976 (R 1989), American National Standards Institute, New York

FDA (1988), State Regulations for the Control of Radiation (SSRCR), Center for Devices and Radiological Health, US Food and Drug Administration, Washington, DC, 1988.

NRC (1987), Interim Notice 87-45, US Nuclear Regulatory Commission, September, 25, 1987.

PART FIVE

METAL FINISHING

CHAPTER 13

Electroplating

13.1 INTRODUCTION

Metal, plastic, and rubber parts are plated to prevent rusting and corrosion, for appearance, to reduce electrical contact resistance, as a base for soldering operations, to provide electrical insulation, and to improve wearability. The common plating metals include cadmium, chromium, copper, gold, nickel, silver, and their alloys. Prior to electroplating, the parts must be cleaned and the surfaces treated as described in Chapters 4 and 5.

The EPA has estimated that there are approximately 160,000 electroplating workers in the United States. Of that number, probably 40,000 work in independent job shops and the balance are employed in large captive shops. The potential health hazards in electroplating operations are numerous; however, a comprehensive epidemiologic study of this industry in the United States has not been completed, so that the true impact of the health hazards on the workers is not known. A limited number of studies have identified a series of health effects in electroplaters ranging from dermatitis to elevated mortality for selected cancers.

13.2 ELECTROPLATING TECHNIQUES

A schematic of an electroplating system is shown in Figure 13.1. The electrolyte consists of a salt of the metal to be applied dissolved in water. Two electrodes powered by a low-voltage dc power supply (4–12 V) are immersed in the electrolyte. The cathode is the workpiece to be plated and the anode is either an inert electrode or, most frequently, a slab or a basket of spheres of the plating metal to maintain the bath metal ion concentration. If the anode is an inert electrode, the metal ion concentration in the bath is maintained by periodically adding metallic salts to the bath. When power is applied, the positively charged metal ions deposit out of the

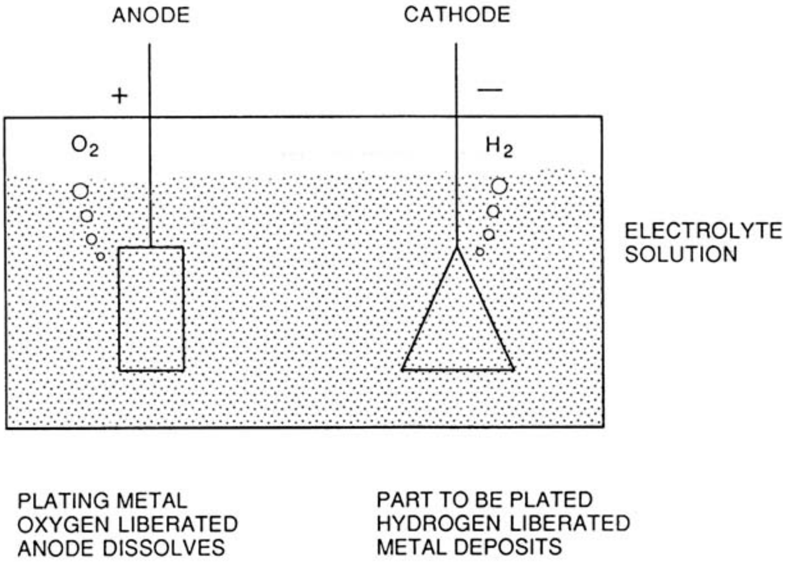

Figure 13.1 Schematic of conventional electroplating.

bath on the cathode or workpiece. Water is dissociated, releasing hydrogen at the cathode and oxygen at the anode. These gases are released as bubbles at the liquid surface. The current density, expressed in amperes per square foot of workpiece surface, varies depending on the operation—the higher the current density the greater the gas evolution rate. In addition to the salt containing the metallic ion, the plating bath may contain chemicals to adjust the electrical conductivity of the bath, additives that determine the type of plating deposit, and a buffer for pH control.

The construction of an electroplating tank is shown in Figure 13.2*a*. The tank is constructed of rigid plastic or steel with a plastic, rubber, or lead lining. The anodes and cathodes, hung from copper rods and immersed in the electrolyte, are electrically connected to the dc power supply with heavy copper bus bars. The tank may be fitted with a local exhaust ventilation hood as shown in Figure 13.2*b*. The design of the ventilation control is discussed in Section 13.4.

A schematic of chromium electroplating, a common plating process with significant health hazards, is shown in Figure 13.3. In this system the plating bath contains chromic acid and the anode is chemically inert. In decorative chrome plating the part is first nickel plated and then a thin coating of chromium is plated on this base. Decorative chrome is widely used for plumbing fixtures and automobile components. A second chromium plating process is hard chrome. In this process, used to plate tools and gauges and to build up worn parts, a thick layer of chromium is applied directly to the base metal. Guillemin and Berode (1978) have demonstrated that this process results in higher exposure to chromic acid mist than decorative chrome plating.

In anodizing, a common surface treatment for decoration, corrosion resistance, and electrical insulation on such metals as magnesium, aluminum, and titanium, the polarity of the system is the reverse of the electroplating process (Figure 13.4). The workpiece is the anode, and the cathode is a lead slab. The oxygen released at the workpiece causes a controlled surface oxidation that is desirable for many applications. Anodizing is usually conducted in a chromic acid bath with high current density; since its efficiency is quite low, the rate of misting is high.

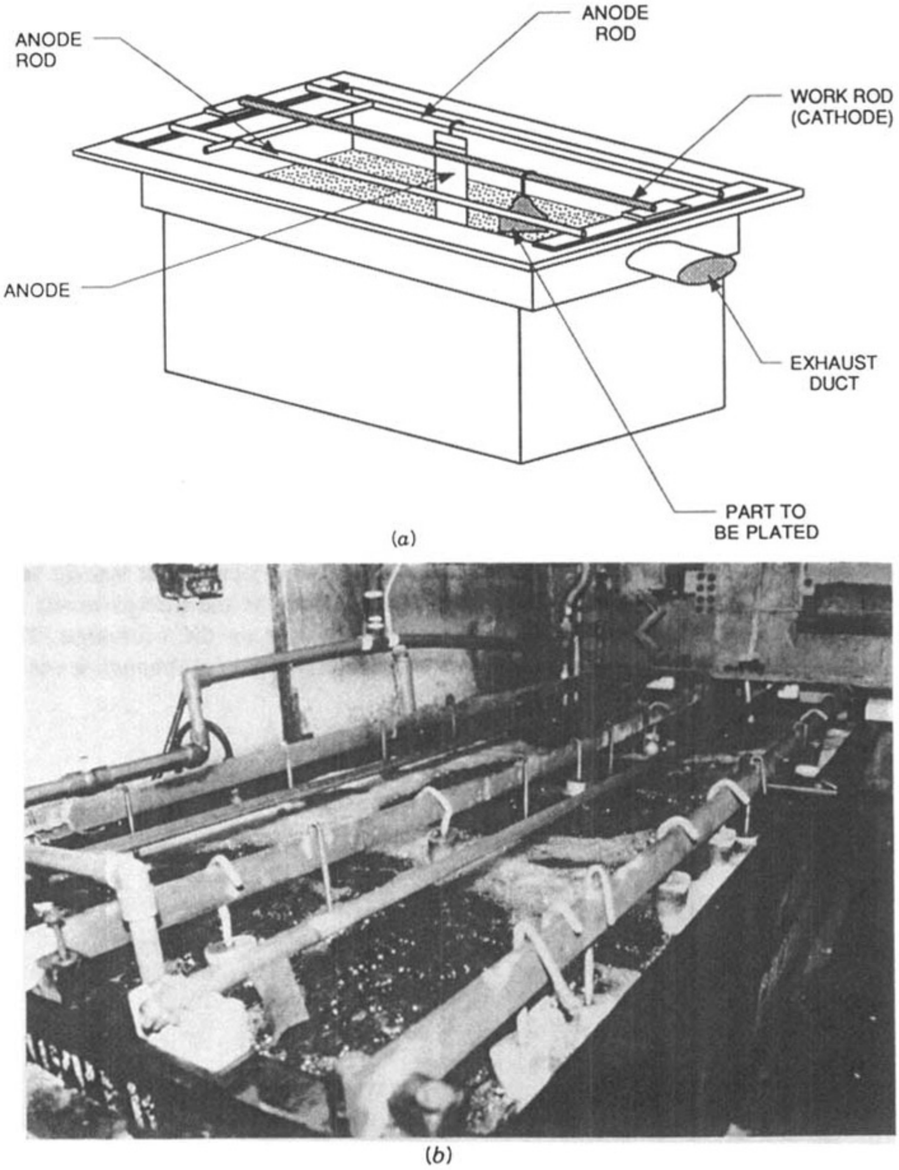

Figure 13.2 (*a*) Principal components of an electroplating tank showing only one anode plate and one workpiece for clarity. The tank is exhausted with a perimeter slot exhaust. (*b*) An operating electroplating tank.

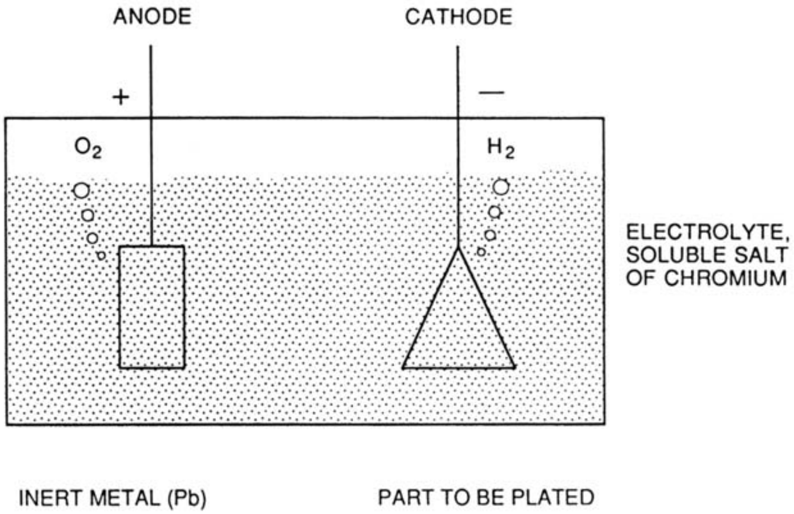

Figure 13.3 Schematic of a chromium electroplating tank.

A number of other special processes are encountered in electroplating. Brush plating is widely used to repair worn metal machine parts, for repair of defective plated parts, and on special applications not easily done by other processes (Orenstein, 1983). The workpiece to be repaired is the cathode and a graphite form covered with an absorbent pad is the anode. The system operates at low dc voltage. The plating solution is applied to the interface between the workpiece and the graphite anode and the metal ions are electrodeposited on the workpiece. This process is frequently done manually on a "one at a time" basis, although it can be

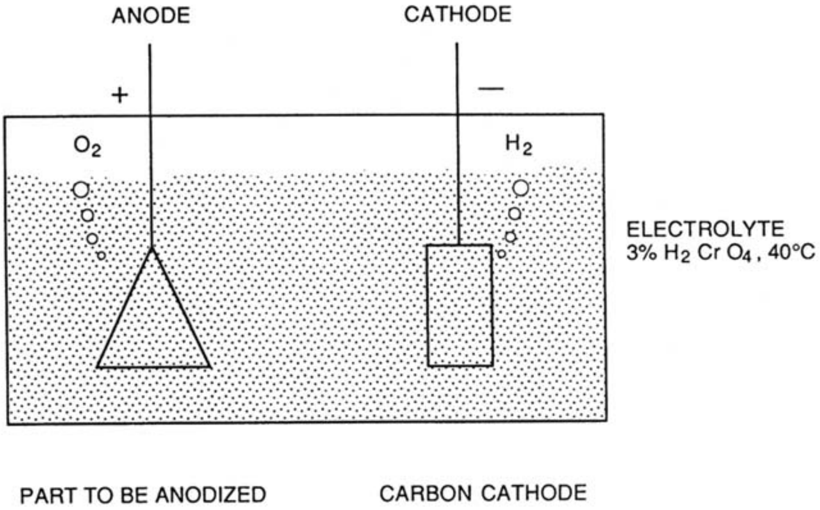

Figure 13.4 Schematic of an anodizing tank.

automated if justified by production. The hazards are skin contact in preparing and handling the chemically saturated pads, and inadvertent mixing of the acids and cyanide chemicals.

In the last decade there has been a great increase in the electroplating of plastic parts due to the ability of the industry to match the quality of plating on metal parts. Electroless plating of a base coat on the plastic is a necessary first step in the process. Electroless plating does not require an external dc power supply, but rather the metal is deposited on the workpiece by a catalytic reaction of the bath (Swanson, 1985). A number of plastics, including nylon and polycarbonate, are suitable for electroless plating. Nickel, copper, cobalt, gold, and palladium can be deposited on the plastic workpiece. First the surface of the plastic part is etched to provide a microscopically rough surface that will permit a mechanical bond between the plastic and the metal. As an example, an acrylonitrile butadiene styrene part can be etched with a chromic and sulfuric acid solution to produce a pitted surface for mechanical bonding of the molecules of the plating metal to the plastic. The etching process also forms the basis for a chemical bond. After alkaline neutralization, the part is treated with a hydrochloric acid solution of stannous and palladium salts. The tin–palladium hydrosol formed is treated with an accelerator to remove the stannous ion, resulting in a palladium-rich surface on the plastic. This surface is the base for subsequent electroless nickel plating from a bath of a nickel salt and a reducing agent. This coating can then be plated by any conventional electrode system.

In production plating operations, individual parts or racks of small parts are hung manually from the cathode bar. If many small pieces are to be plated, the parts are placed in a perforated plastic barrel in electrical contact with the cathode bar and the barrel is immersed in the bath. The parts are tumbled to achieve a uniform plating.

In small job-shop operations, the parts are transferred manually from tank to tank as dictated by the type of plating operation. The complexity of this operation is illustrated by the number of steps in decorative chromium plating (Figure 13.5). The extensive pretreatment in this sequence includes degreasing to remove grease and oil, pickling to remove heavy scale, alkaline anodic cleaning to remove soils, and finally an acid dip to remove light scale and activate the surface for plating. In high-production shops an automatic transfer unit is programmed to cycle the parts from tank to tank; the worker is only required to load and unload the racks or baskets. This automatic plating operation permits the facilities engineer to design enclosing exhaust hoods on the tanks to achieve more effective control of air contaminants. Exposure to air contaminants is also limited in automatic plating lines since the worker is stationed at a loading or unloading position that is remote from the process and therefore is not directly exposed to air contaminants released at the tanks.

13.3 AIR CONTAMINANTS

The principal source of air contamination in electroplating operations is release of the bath electrolyte to the air by the formation of bubbles in the bath. As men-

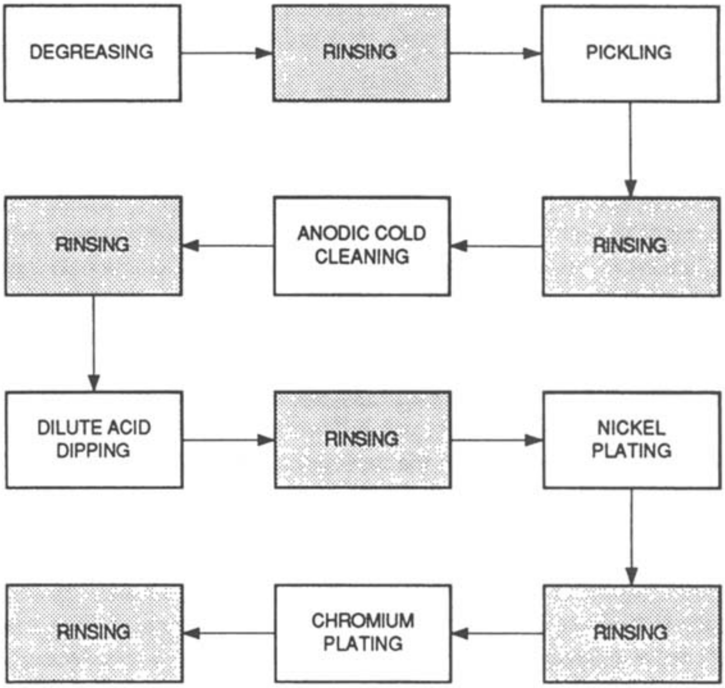

Figure 13.5 Steps involved in decorative chromium plating of steel.

tioned above, the bath operates as an electrolytic cell; thus water is dissociated and hydrogen is released at the cathode and oxygen at the anode. When the film cap of the gas bubble ruptures, a small-sized droplet is formed, as shown in Figure 13.6. The liquid jet rising from the crater left by the bubble is then the source of a second droplet that is an order of magnitude larger than the original droplet (Van Dusen and Smith, 1989). This droplet represents the principal air contaminant, a respirable mist of the liquid bath. The presence of this mist can be detected by placing a clean piece of paper approximately 2 cm above the surface of the bath. Staining of the paper indicates that mist is being released from the surface of the bath.

The mist generation rate of electroplating tanks depends on the efficiency of the process. As shown in Table 13.1 for copper plating, the efficiency of the sulfate plating bath is nearly 100%; that is, essentially all the energy goes into the plating operation and little goes into the dissociation of water and the release of mist (Blair, 1972). Mist generation in nickel plating baths is minimal since these baths operate at 95% efficiency; only 5% of the energy is directed to the dissociation of water and gassing. However, chromium plating operations are quite inefficient and up to 90% of the total energy may be devoted to dissociation of the water with resulting severe gassing and potential exposure of the operator to chromic acid mist.

Although the contaminant generation rate of the bath is governed principally by the inherent efficiency of the process, it also varies with the metallic ion concen-

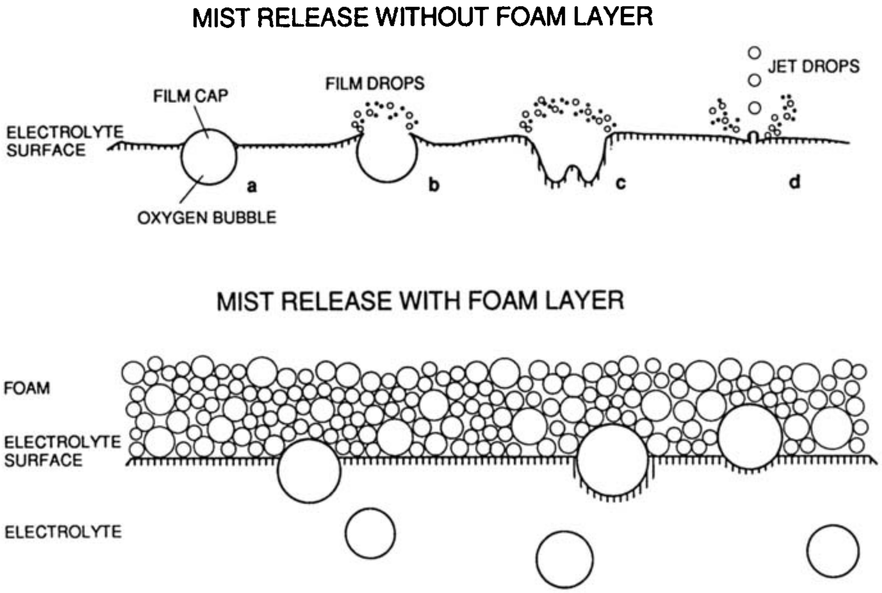

Figure 13.6 *Top*: Schematic showing an electroplating tank without mist suppression treatment. (*a*) The gas bubble shown just before release from the bath, (*b*) small diameter mist droplets are formed as the film cap of the gas bubble breaks (*c*) a liquid jet is formed in the crater (*d*) larger droplets formed and released from the jet. *Bottom*: The effectiveness of a foam suppressant on electrolytic mist release is described. Source: Adapted from Kerby and Jackson (1979).

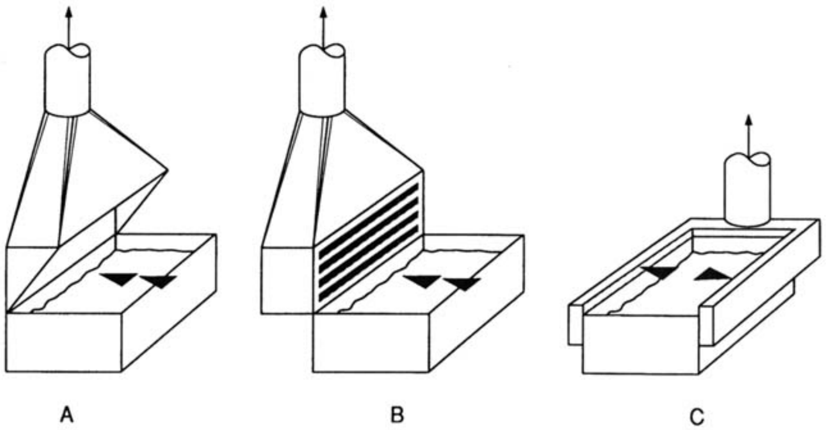

Figure 13.7 Conventional open-surface tank exhaust hoods: (*A*) open fishtail, (*B*) slotted plenum fishtail and (*C*) lateral slot.

TABLE 13.1 Electroplating Bath Operating Conditions

Deposited Metal	Application	Bath Composition	Temperature (°C)	Cathode Current Density (A/m^2)	Cathode Current Efficiency (%)
Cadmium	Decorative Protective	Cyanide	30	5–50	90–95
Chromium	Hard plate	Dilute CrO_3	45–55	50–200	10–20
	Decorative	Conc. CrO_3	40–50	80–120	10–20
Copper	Strike	Cyanide	40–60	10–40	30–50
	Heavy plate	Sulfate	20–50	20–100	95–100
Gold	Electrical Decorative	Cyanide	60–70	1–10	95
Nickel	Protective	Watts	55	10–60	95
		Chloride	55	50–100	95
		Fluoborate	55	50–100	95
Silver	Strike	Cyanide strike	20	30	99
	Cyanide heavy	Cyanide heavy	20–50	10–150	99
Tin	Tin plate	Acid sulfate (1)	25–30	10–60	95
		(2)	40–50	100–400	95
		Alkaline (1)	80	10–60	95
		(2)	85	100–400	95
Zinc	Brightener	Cyanide	30–50	10–50	75–95
	Brightener	Sulfate	25–35	10–30	95

Source: Blair (1972). Courtesy of Pergamon Press Ltd.

tration, the current density, the bath additives, and the bath temperature. Air or mechanical agitation of the bath, used to improve plating quality, may also result in release of mist.

The health significance of the mist generated by electroplating processes depends, of course, on the contents of the bath. In considering the nature of the airborne contaminants released from the bath, it is convenient to class the bath electrolyte as alkaline or acidic. A majority of alkaline baths, based on cyanide salt solutions, are used for cadmium, copper, silver, brass, zinc, and bronze plating. Chromium, copper, nickel, and tin are commonly plated from acidic baths. The

TABLE 13.2 Determination of Hazard Potential

	Hygienic Standards		
Hazard Potential	Gas and Vapor TLVs	Mist TLVs	Flash Point
A	0–10 ppm	0–0.1 mg/m^3	—
B	11–100 ppm	0.11–1.0 mg/m^3	Under 100 F
C	101–500 ppm	1.1–10 mg/m^3	100–200 F
D	Over 500 ppm	Over 10 mg/m^3	Over 200 F

Source: Adapted from ACGIH (1992).

TABLE 13.3 Determination of Rate of Gas, Vapor or Mist Evolution

Rate	Liquid Temperature (ºF)	Degrees Below Boiling Point (ºF)	Relative Evaporation[a] (Time for 100% (Evaporation)	Gassing[b]
1	Over 200	0–20	Fast (0–3 hr)	High
2	150–200	21–50	Medium (3–12 hr)	Medium
3	94–149	51–100	Slow (12–50 hr)	Low
4	Under 94	Over 100	Nil (over 50 hr)	Nil

Source: Adapted from ACGIH (1992).

[a] Drying Time Relation. Below 5, fast; 5–15, medium; 15–75, slow; 75 and over, nil.

[b] Rate of gassing depends on rate of chemical or electrochemical action and therefore on the material treated and the solution used in the tank and tends to increase with (1) amount of work in the tank at any one time, (2) strength of the solution in the tank, (3) temperature of the solution in the tank, (4) current density applied to the work in electrochemical tanks.

exact composition of the baths can be obtained from an electroplaters' handbook or from the supplier.

An inventory of the chemicals in the common electroplating baths, the form in which they are released to the air, and the rate of gassing, has evolved over the past decades, drawing heavily on the experience of the state industrial hygiene programs in New York and Michigan. Although originally proposed as the basis for ventilation requirements for various plating operations, these data are useful in defining the nature of the contaminant and the selection of the air sampling procedure necessary to define the workers' exposure. These data are discussed in Section 13.4.

In addition to the release of electrolyte mist, the acidic action of carbon dioxide in air (350–400 ppm) may cause small quantities of hydrogen cyanide to be released from cyanide-based baths. This issue has not been clearly identified in the literature.

13.4 CONTROL

Proprietary bath additives are available to reduce the surface tension of the electrolyte and, therefore, to reduce misting. The minimum effective viscosity is 35 dyne/cm, but one should operate at a viscosity of 25 dyne/cm (Hama et al., 1954; Henning, 1972). Additives are available to provide a thick foam that traps the mist released from the bath. These agents are best used for tanks that operate continuously. A layer of plastic chips, beads, or balls on the surface of the bath will also trap the mist and permit it to drain back into the bath.

The three exhaust hoods for open-surface tanks shown in Figure 13.7 are commonly installed in plating shops. All are identified as lateral exhaust hoods since they provide a horizontal sweep of air across the surface of the tank to the hood opening. As noted in the discussion of automatic plating, the application of partial and total enclosures in conjuction with these hoods is frequently possible, thereby providing excellent control of air contaminants at modest flow rates.

TABLE 13.4 Airborne Contaminants Released by Electropolishing, Electroplating, and Electroless Plating Operations

Process	Type	Notes[a]	Component of Bath Which May be Released to Atmospheric	Physical and Chemical Nature of Major Atmosphere Contaminant	Class	Usual Temp. Range (°F)
Electropolishing	Aluminum	1	Sulfuric, hydrofluoric acids	Acid Mist, Hydrogen Flouride Gas, Steam	A-2	140–200
	Brass, bronze	1	Phosphoric acid	Acid Mist	B-3	68
	Copper	1	Phosphoric acid	Acid Mist	B-3	68
	Iron	1	Sulfuric, hydrochloric, perchloric acids	Acid Mist, Hydrogen Chloride Gas, Steam	A-2	68–175
	Monel	1	Sulfuric acid	Acid Mist, Steam	B-2	86–160
	Nickel	1	Sulfuric acid	Acid Mist, Steam	B-2	86–160
	Stainless steel	1	Sulfuric, hydrofluoric, chromic acids	Acid Mist, Hydrogen Flouride Gas, Steam	A-2, 1	70–300
	Steel	1	Sulfuric, hydrochloric, perchloric acids	Acid Mist, Hydrogen Chloride Gas, Steam	A-2	68–175
Strike solutions	Copper		Cyanide salts	Cyanide Mist	C-2	70–90
	Silver		Cyanide salts	Cyanide Mists	C-2	70–90
	Wood's nickel		Nickel chloride, hydrochloric acid	Hydrogen Chloride Gas, Chloride Mist	A-2	70–90
Electroless plating	Copper		Formaldehyde	Formaldehyde Gas	A-1	75
	Nickel	2	Ammonium hydroxide	Ammonia Gas	B-1	190
Electroplating alkaline	Platium		Ammonium phosphate, ammonia gas	Ammonia Gas	B-2	158–203
	Tin		Sodium stannate	Tin Salt Mist, Steam	C-3	140–170
	Zinc	3	None	None	D-4	170–180
Electroplating fluoborate	Cadmium	20	Fluoborate salts	Fluoborate mist, steam	C-3,2	70–170
	Copper	20	Copper fluoborate	Fluoborate mist, steam	C-3,2	70–170
	Indium	20	Fluoborate salts	Fluoborate mist, steam	C-3,2	70–170
	Lead		Lead fluoborate-fluoboric acid	Fluoborate mist, hydrogen fluoride gas	A-3	70–90
	Lead–tin alloy	20	Lead fluoborate-fluoboric acid	Fluoborate mist	C-3,2	70–100
	Nickel	20	Nickel fluoborate	Fluoborate mist	C-3,2	100–170
	Tin	20	Stannous fluoborate, fluoboric acid	Fluoborate mist	C-3,2	70–100
	Zinc	20	Fluoborate Salts	Fluoborate mist, steam	C-3,2	70–170
Electroplating cyanide	Brass, bronze	4,5	Cyanide salts, ammonium hydroxide	Cyanide mist, ammonia gas	B-4,3	60–100
	Bright zinc	5	Cyanide salts, sodium hydroxide	Cyanide, alkaline mists	C-3	70–120
	Cadmium	5	None	None	D-4	70–100
	Copper	5,6	None	None	D-4	70–160
	Copper	5,7	Cyanide salts, sodium hydroxide	Cyanide, alkaline mists, steam	C-2	110–160
	Indium	5	Cyanide salts, sodium hydroxide	Cyanide, alkaline mists	C-3	70–120

	Silver	5	None	None	D-4	72–120
	Tin–zinc alloy	5, 20	Cyanide salts, potassium hydroxide	Cyanide, alkaline mists, steam	C-3,2	120–140
	White alloy	5,8	Cyanide salts, sodium stannate	Cyanide, alkaline mists	C-3	120–150
	Zinc	5,9	Cyanide salts, sodium hydroxide	Cyanide, alkaline mists	C-3,2	70–120
Electroplating Acid	Chromium		Chromic acid	Chromic acid mists	A-1	90–140
	Copper	10, 21	Copper sulfate, sulfuric acid	Sulfuric acid mist	B-4,3	75–120
	Indium	12	None	None	D-4	70–120
	Indium	13, 14	Sulfamic acid, sulfamate salts	Sulfamate mist	C-3	70–90
	Iron		Chloride salts, hydrochloric acid	Hydrochloric acid mist, steam	A-2	190–210
	Iron	12	None	None	D-4	70–120
	Nickel	3	Ammonium fluoride, hydrofluoric acid	Hydrofluoric acid mist	A-3	102
	Nickel and black nickel	12, 15, 22	None	None	C-4	70–150
	Nickel	9, 12	Nickel sulfate	Nickel sulfate mist	B-2	70–90
	Nickel	13, 14	Nickel sulfamate	Sulfamate mist	C-3	75–160
	Palladium	15	None	None	D-4	70–120
	Rhodium	12, 17	None	None	D-4	70–120
	Tin		Tin halide	Halide mist	C-2	70–90
	Tin	12	None	None	D-4	70–120
	Zinc		Zinc chloride	Zinc chloride mist	B-3	75–120
	Zinc	12	None	None	D-4	70–120

Source: Adapted from ACGIH (1992).

[a]Notes:
1 Arsine may be produced due to the presence of arsenic in the metal or polishing bath.
2 Alkaline bath
3 On magnesium
4 Also copper–cadmium bronze
5 HCN gas may be evolved due to the acidic action of CO_2 in the air at the surface of the bath
6 Conventional cyanide bath
7 Except conventional cyanide bath
8 Albaloy, spekwhite, bonwhite (alloys of copper, tin, zinc)
9 Using insoluble anodes
10 Over 90°F
11 Mild organic acid bath
12 Sulfate bath
13 Sulfamate bath
14 Air agitated
15 Chloride bath
16 Nitrite bath
17 Phosphate bath
18 Higher temperatures, agitation, high current density or other conditions may result in a higher rate of evolution.
19 Hydrogen gas also released by many of these operations.
20 The higher rate is associated with the higher value in the temperature range.
21 Baths operated at a temperature of over 140°F with a current density of over 45 A/ft^2 and with air agitation will have a higher rate of evolution.
22 Local exhaust ventilation may be desired to control steam and water vapor.

The choice of airflow rates for open-surface tanks through the 1940s was based on a fixed airflow per unit tank area. It was considered good practice to exhaust all tanks containing nitric, chromic, and hydrofluoric acid, hot cyanide and alkaline solutions, and hot water at a rate of 0.5–0.75 m^3/m^2 (100–150 cfm/ft^2) of tank area. In some cases this was quite adequate; in other cases, it was not. A more rigorous design approach has evolved based on two rating scales. The first scale is the hazard potential of the contaminants released from the bath and the second is the rate of evolution of the contaminant (Tables 13.2 and 13.3). This approach, introduced by the state of New York and ANSI in the 1940s and 1950s, provides an improved basis for ventilation design. It does require familiarity with the many electroplating processes, bath contents, and operating conditions. To assist the ventilation designer and the industrial hygienist, the New York Division of Industrial Hygiene published a set of tables on various electroplating operations which describe the bath components that may be released from each process, the physical form of the contaminant, and the alphanumeric class that becomes the basis for the ventilation design (Table 13.4).

This design procedure permits one to determine a minimum control velocity based on the hazard potential of the bath and the rate of contaminant generation. The exhaust volume is calculated based on this control velocity and the tank geometry. The reader is referred to ACGIH (1992) and Burgess et al. (1989) for a detailed presentation of the design ventilation procedure. In addition to the proper design and installation of good local exhaust ventilation, one must provide adequate replacement air, backflow dampers on combustion devices to prevent carbon monoxide contamination of the workplace, and suitable air cleaning.

The effectiveness of exhaust ventilation may be evaluated by air sampling at the workplace and direct ventilation measurements at the bath. Because of the severe corrosion of duct work, periodic checks of the exhaust systems in plating shops are necessary. One should determine the airflow rate from each tank by pitot static measurements and compare the observed values with the recommended exhaust rate. It is common practice to measure the hood slot velocity in several locations, average the readings, and calculate the exhaust volume from these measurements. This technique has limited value owing to difficulty in defining average velocity in a narrow slot. The usefulness of slot velocity is limited to an evaluation of the uniformity of the exhaust over the length of the tank. Qualitative assessment of the ventilation is possible using smoke tubes or other tracers. The effects of room drafts on capture velocity should be identified. The use of partitions to minimize the disruptive effects of drafts may greatly improve the efficacy of the installed ventilation.

An extensive review of the usefulness of various control technologies including local exhaust ventilation, mist control additives, plastic chips, and foam blankets (Figure 13.6) has been conducted by the National Institute for Occupational Safety and Health (NIOSH, 1985). Chips and mist suppressants were adequate for certain baths, but for hard chrome plating and other critical control situations, these measures should be used in conjuction with local exhaust ventilation. The single most important feature affecting worker exposure was whether a cover was in use on the tanks. In one case study the use of a cover resulted in a reduction in air concentrations by a factor of 20. In several cases recommended minimum exhaust rates (ACGIH, 1992) were found to be too high, resulting in wasted energy. In addition, the study indicated that push–pull ventilation was an effective approach for tanks over 4 ft in width.

The low-voltage dc power supply in use in electroplating does not present an electrical hazard. A fire and explosion risk may result if solvent degreasing and spray painting are conducted in areas contiguous with the plating shop. The major chemical safety hazards result from the handling of concentrated acids and alkalines when preparing the baths and the accidental mixing of acids with cyanides or sulfides during plating, bath preparation, and waste disposal, causing the formation of hydrogen cyanide or hydrogen sulfide. The educated use of protective equipment by electroplaters is extremely important for preventing contact with the various sensitizers and corrosive materials encountered in the plating shop. The

TABLE 13.5 Summary of Major Electroplating Health Hazards

Inhalation	
Mist, gases and vapors	
Hydrogen cyanide	Accidental mixing of cyanide solutions and acids
Chromic acid	Released as a mist during chrome plating and anodizing
Hydrogen sulfide	Accidental mixing of sulfide solutions and acids
Nitrogen oxides	Released from pickling baths containing nitric acid
Dust	
Released during weighing and transfer of various solid bath materials including cyanides and cadmium salts	
Fumes	
Generated during on-site repair of lead-lined tanks using torch-burning techniques	
Ingestion	
Accidental ingestion of particulate contamination during smoking and eating at workplace	
Skin Contact	
Absorption of cyanide compounds through the skin	
Defatting by solvents	
Primary irritants	
Sensitizers	
Control Technology	
Local exhaust ventilation	
Mist reduction	
Reduce surface tension	
Coat surface	
Tank covers	
Isolation of stored chemicals	

minimum protective clothing should include rubber gloves, aprons, boots, chemical handler's goggles, and face shields. Aprons should come below the top of the boots. All personnel should have a change of clothing available at the workplace. A shower and eye wash station serviced with tempered water should be available. The wide range of chemicals handled in an open fashion does present a major dermatitis hazard to the plater, and skin contact must be avoided. Nickel is a skin sensitizer and may cause nickel itch, developing into a rash with skin ulcerations. If solutions are splashed on the work clothing it should be removed, the skin should be washed, and the worker should change to clean garments. Hands should be washed frequently and eating, drinking, and smoking should be prohibited in the work area.

A summary of the health hazards encountered in electroplating shops and the appropriate controls are presented in Table 13.5.

REFERENCES

ACGIH (1992), *Industrial Ventilation, A Manual of Recommended Practice*, 21st ed. ACGIH, American Conference of Governmental Industrial Hygienists, Committee on Industrial Ventilation, Cincinnati, OH.

Blair, D. R. (1972), *Principles of Metal Surface Treatment and Protection*, Pergamon Press, Oxford.

Burgess, W. A., Ellenbecker, M. E., and Treitman, R. D. (1989), *Ventilation for Control of The Work Environment*, Wiley, New York.

Guilliman, M. P. and Berode, M. (1978), *Ann. Occup. Hyg.*, **21**, 105–112.

Hama, G., Frederick, W., Millage, D., and Brown, H. (1954), *Am. Ind. Hyg. Assoc. J.*, **15**, 211.

Henning, H. F. (1972), *Ann. Occup. Hyg.*, **15**, 93–97.

Kerby, R. C. and Jackson, H. E. (1979), "Use of Proteins in Electrowinning and Electrorefining of Metals," ACS Symposium, Washington, DC, September.

NIOSH (1985), *Control Technology Assessment; Metal Plating and Cleaning Operations*, DHHS (NIOSH) Publ. No. 185–102, National Institute for Occupational Safety and Health, Cincinnati, OH.

Orenstein, G. L. (1983), *Mach. Des.*, July 21, 1983, 91–92.

Swanson, R. (1985), *Mach. Des.*, Sept. 12, 1985, 67–71.

Van Dusen, J. and Smith, J. W. (1989), *Am. Ind. Hyg. Assoc. J.*, **50**, 252–256.

CHAPTER 14

Metal Thermal Spraying

14.1 INTRODUCTION

If a fine-mesh metal powder or wire is melted in an application gun and the molten particles are projected at a workpiece at high velocity, they will freeze and adhere to the workpiece surface. A practical technique for such spraying of molten metal was invented in the 1920s and has found application for applying metals, ceramics, and plastic powder to workpieces to (1) protect them from corrosion, (2) build up worn or corroded parts, (3) improve wear resistance, (4) reduce production costs, and (5) decorate surfaces. In recent years a variety of materials have been sprayed, as shown in Table 14.1. The health hazards from thermal spraying of metals was first observed in 1922 in the United Kingdom when operators suffered from lead poisoning.

TABLE 14.1 Spraying Materials

Metals	Tungsten, nickel, chromium, tantalum, aluminum, zirconium, iridium, cadmium, lead, molybdenum
Alloys	Nichrome, stainless steel, babbitt, bronze
Ceramics	Alumina, zirconia, beryllia, spinel, zircon, glass
Intermetallic compounds	Nickel aluminide, molybdenum disulfide
Interstitial compounds	Titanium carbide, zirconium diboride, chromium carbide

Source: Lyman (1964).

14.2 APPLICATION TECHNIQUES

The application head for thermal spraying takes many forms and dictates the range of hazards one may encounter from the operation. The four techniques presently in use in industry are described below.

14.2.1 Combustion Spraying (Flame)

The coating material in a wire form is fed to a gun operated with air or oxygen and a combustible gas such as acetylene, propane, or natural gas. The wire is melted in the flame, disintegrated with a coaxial stream of compressed air, and propelled from the torch at velocities up to 240 m/sec (48,000 fpm) (Figure 14.1). The molten metal particles of approximately 50 μm bond to the workpiece by a combination of mechanical interlocking of the molten, platelet-form particles and a cementation of partially oxidized material.

The metal can also be sprayed in powder form. The fuel gases in this system are either acetylene or hydrogen used in combination with oxygen. The powder is aspirated by the oxygen and fuel stream, and the molten particles are deposited on the workpiece at velocities below 30 m/sec (6000 fpm). This technique may also be used to apply ceramics, carbides, and alloys containing a flux that is fused at high temperature in a separate operation.

14.2.2 Thermal Arc Spraying (TAS, Wire)

Two consumable metal wire electrodes in this process (Figure 14.2) are made of the metal to be sprayed. The wires, powered by a low voltage, high-amperage dc power supply, establish an arc as in a conventional arc welding unit. The molten metal is disintegrated by compressed air, and the molten particles are projected to the workpiece at high velocity.

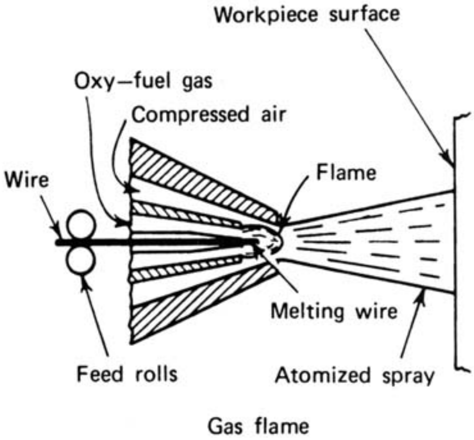

Figure 14.1 Combustion spraying.

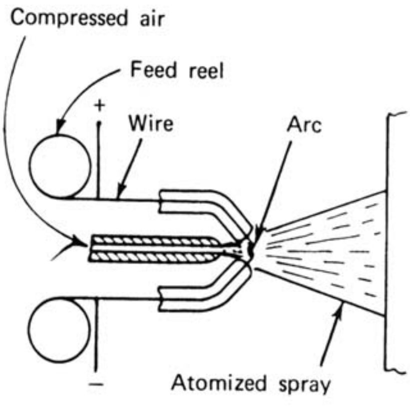

Electric arc

Figure 14.2 Thermal arc spraying.

14.2.3 Plasma

An electric arc is established in the controlled atmosphere of a special nozzle. Argon gas is passed through the arc, where it ionizes to form a plasma that continues through the nozzle and recombines to create temperatures as high as 16,700°C (30,000°F) (Figure 14.3). Metal alloy, ceramic, and carbide powders delivered to the arc are melted in the stream and are released from the gun at a velocity of 300–600 m/sec (60,000–120,000 fpm).

14.2.4 Detonation

In this unit the gases are fed to a combustion chamber where they are ignited by a spark plug at the rate of 260 firings per minute. The unit operates in the same way as the pulse jet rocket motor of World War II. Metal powder is fed to the

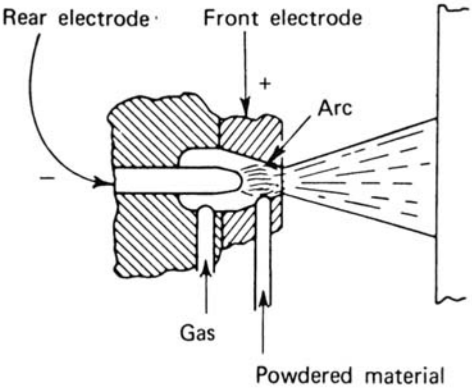

Figure 14.3 Plasma spraying.

chamber, and the explosions drive the melted powder to the workpiece at velocities of approximately 760 m/sec (150,000 fpm). Tungsten carbide, chromium carbide, and aluminum oxide are applied with this technique. The application of this technique is limited.

14.3 HAZARDS

The principal hazards from metal thermal spraying operations include metal fumes, gases fixed by the energy of the gun, noise, and nonionizing radiation. The potential exposure to toxic metal fumes is common to all techniques. High air concentrations of metal fume may exist since the processes generate a dense spray of very small particles with large surface area; the vapor pressure of the metal at the application temperature is high, leading to metal vaporization and subsequent oxidation to form fumes. If the metal is overheated because of a malfunction or poor adjustment of the gun, this problem is accentuated.

The deposition efficiency, that is, the percent of the metal sprayed that is deposited on the workpiece, varies between application techniques and the coating metal. For combustion spraying with wire, the deposition efficiency varies from 90% for aluminum to 55% for lead; the plasma arc technique ranges from 50% for chromium carbide to as high as 90% for alumina-titania.

Deposition efficiency obviously has a major impact on air concentrations in the workplace. Because the airborne concentration varies with the type of metal sprayed, the application technique, the operating parameters, and the tool–workpiece geometry, it is impossible to estimate the level of contamination that may occur from a given operation. There are few studies in the literature on exposures during metal spraying. For this reason, if a toxic metal is sprayed, air samples should be taken to define the worker exposure.

A comprehensive review of thermal arc spraying was conducted by NIOSH at the request of an equipment manufacturer (NIOSH, 1989). This presented the investigators with a rare opportunity to review radiation, noise, and metal fume exposures under normal and simulated circumstances using a range of operating conditions. The major emphasis of this study was an investigation of the optical radiation exposures. The maximum observed levels in a series of 12 different operations were as follows: actinic radiation (200–315 nM), 22 μW/cm^2; visible radiation, 16.7 cd/cm^2; and IR radiation, 170 μW/cm^2. The observed maximum levels of all three types of optical radiation on these operations exceeded the ACGIH guidelines. This NIOSH report would be useful to an occupational health specialist who is planning and conducting a detailed review of IR, visible, and UV radiation from metal spraying operations.

The A-weighted noise exposure of the 12 thermal spray operations ranged from a low of 107 to a high of 119 dBA. Octave band analyses revealed that the principal energy is concentrated in the 2000 to 4000 Hz octave bands and is due to the compressed air released from the nozzle. A 3-dBA reduction was noted when the air pressure was dropped from 100 to 20 psig; a similar reduction was seen when the current was reduced from 250 to 100 A.

A range of wire alloys were employed in the tests. Fixed-location air sampling was conducted during the spraying. Although the air concentrations cannot be compared to occupational exposures limits, the data demonstrate that it is quite easy to exceed the ACGIH TLV for hexavalent chromium, copper, and iron oxide in a well designed spray booth.

14.4 CONTROL

The principal control of air contaminants generated during metal thermal spraying is local exhaust ventilation (Hagopian and Bastress, 1976; AWS, 1973). Low-toxicity metals may be exhausted with a freely suspended open hood with a face velocity of 1.02 m/sec (200 fpm) or an enclosing hood with a minimum face velocity of 0.64 m/sec (125 fpm). High-toxicity metal fumes should be exhausted with an enclosed hood with a face velocity of 1.02 m/ sec (200 fpm). The operator should also wear a positive-pressure air-supplied respirator while metallizing with toxic metals. One must also consider the exposure of other workers in the area, since systems with deposition efficiencies of 50% represent a significant source of general contamination.

All thermal spraying techniques result in significant noise exposures and require effective hearing conservation programs. Combustion spraying represents the lowest exposures, whereas exposures greater than 120 dBA result from plasma spraying (Table 14.2). Appreciable noise reduction can be achieved by changing the operating characteristics of the spray equipment. On thermal arc spraying and powder guns, the noise level can be reduced 3–5 dBA by lowering the air or gas flow rate. Reduced amperage on plasma spray guns and thermal arc guns is effective in re-

TABLE 14.2 Typical Noise Levels from Flame Spray Equipment

Equipment	Operation	Noise Level Range (dBA)
Gas torch	Oxygen–acetylene	88–89
Powder spray gun	Acetylene	88–89
	Acetylene with air jet at 50 psi	110
	Hydrogen	100–101
Wire combustion gun (1/8 and 3/16 in. wire)	Acetylene	114
	Propane	118
	Methylacetylene propadiene	118
Electric arc guns	24 V, 200 A	111
	32 V, 500 A	116
Plasma flame spray gun	Nitrogen 125/0 flows, 600 A	134
	Nitrogen/hydrogen 75/15 flows, 600 A	133
	Argon 200/0 flows, 1000 A	128
	260/0 flows, 800 A	131
	Argon/hydrogen 80/15 flows, 600 A	132
	150/5 flows, 600 A	127

Source: Metco Inc. (1978).

ducing noise output from this equipment. The results of the NIOSH study cited earlier support both of these recommendations. However, this noise reduction results in lower spray rates and a poor-quality surface coating. If one cannot accept these penalties, the manufacturers suggest using the normal approaches to noise control, including isolation and hearing protectors.

The thermal arc and plasma procedures present additional hazards which reflect their welding origins, including UV exposure and the generation of ozone and nitrogen dioxide. The use of tinted welding curtains and appropriate eye protection is necessary to protect the operator and co-workers from radiation. If ventilation is effective in controlling metal fumes, it will probably control ozone and nitrogen dioxide, although this fact should be established by air sampling. In addition to air-supplied respirators, operators handling toxic metals such as cadmium and lead should wear protective gloves and coveralls and be required to bathe and change to clean clothes prior to leaving the plant.

Special fire protection problems are encountered in routine metallizing operations. Unless ventilation control is effective, particles will deposit on various plant structures and may become a potential fire hazard. If one uses a scrubber to collect the particles, hydrogen may form in the sludge, resulting in a potential fire and explosion hazard.

REFERENCES

AWS (1973), *Recommended Safe Practices for Thermal Spraying*, American Welding Society, Miami, Fl.

Hagopian, J. H. and Bastress, E.K. (1976), *Recommended Industrial Ventilation Guidelines*, Publ. No. (NIOSH) 76-162, National Institute for Occupational Safety and Health, Cincinnati, OH.

Lyman, L., Ed. (1964), *Metals Handbook*, Vol. 2, 8th ed., American Society for Metals, Metal Park, OH.

Metco Inc. (1978), *Metco Flame Spraying Processes*, Metco, Inc., Westbury, NY.

NIOSH (1989), Health Hazard Evaluation Report 88-136-1945, Miller Thermal Technologies, Inc., Appleton, WI, National Institute for Occupational Safety and Health, Cincinnati, OH.

CHAPTER 15

Painting

15.1 INTRODUCTION

Paint products are used widely in industry to provide a surface coating for protection against corrosion, for appearance, as electrical insulation, for fire retardation, and for other special purposes. The widespread application of this technology, from small job shops to automated painting of automobiles, includes more than half a million workers in the United States. Of this number, 200,000 workers are employed in automobile body repair shops.

Although the health status of painters has not been well defined, the studies that have been completed suggest acute and chronic central nervous system effects, hematologic disorders, and excess mortality from cancer. In addition, respiratory sensitization may occur from two-part urethane systems, and skin sensitization may be caused by the amine catalyst in spray paints.

Environmental concerns and regulations in the United States have resulted in major changes in paint systems. In 1985 an industry spokesperson stated that the new high solids and nonsolvent paints amounted to 40% of the industrial market, with the market for traditional solvent-based industrial coatings declining at the rate of 5% per year (Anon., 1985). At that time, the manufacturing sector was lagging behind the construction sector in the rate of conversion to the newer systems. A decade later this situation has changed, with manufacturing now showing a steep increase in the conversion from high solvent-based paints.

15.2 PAINT SYSTEMS

The term paint is commonly used to identify a range of organic coatings including paints, varnishes, enamels, and lacquers. Conventional paint is an inorganic pigment dispersed in a vehicle consisting of a binder and a solvent with selected fillers and additives. Varnish is a nonpigmented product based on oil and natural resin in a solvent that dries first by the evaporation of the solvent and then by the oxidation of the resin binder. Varnishes based on synthetic resins are also available. A pigmented varnish is called an enamel. Lacquers are coatings in which the solvent evaporates, leaving a film that can be redissolved in the original solvent.

The ultimate high-solids, low-solvent formulation is a dry powder paint. The powder, which represents the complete paint formulation including the resin, pigment, and additives, is conveyed from a powder reservoir to the spray gun. In the gun, a charge is imparted to the individual paint particles. This dry powder is gently blown on the electrically grounded workpiece and, after coating, the parts are baked to fuse the powder film into a continuous coating (AFP, 1990). This coating technique provides a high-quality finish while eliminating solvent exposure to the worker. Thermosetting resins, used for decorative and protective coatings, are based on epoxy, polyester, and acrylic resins. Thermoplastic resins are applied in thick coatings for critical applications.

15.2.1 Liquid Paint Systems

15.2.1.1 Solvent-Based Paints. The conventional solvent-based paints consist of the vehicle, filler, and additives (Table 15.1). The vehicle represents the total liquid content of the paint and includes the binder and solvent. The binder, which is the film-forming ingredient, may be a naturally occurring oil or resin, including linseed oil and oleoresinous materials or a synthetic material such as alkyd resins (Table 15.2). The solvent systems are varied and complex. The most common organic solvents include aliphatic and aromatic hydrocarbons, ketones, alcohols, glycols, and glycol ether/esters. These solvents have high vapor pressure and represent the critical worker exposure component in most painting techniques. High-solids

TABLE 15.1 Paint Constituents

Major Component	Constituents	Purpose
Vehicle	Binder	Resin that forms film
	Solvent	Thinner for adjustment of viscosity
Filler	General filler	Hiding ability, body, color
	Pigment	Opaqueness, color
	Extender	Fillers that build body
Additives	Driers	Speed drying or curing
	Biocide	Prevent growth of mold and fungus
	Flatting agents	Provide low luster
	Stabilizers	Protect against heat and UV radiation
	Antiskinning	Prevent skin formation in can

paint systems (low solvent) represent a major contribution to reduced solvent exposure.

The fillers, including pigments and extenders, have historically represented a major hazard in painting (Table 15.3). The common white pigments include bentonite and kaolin clay, talc, titanium dioxide, and zinc oxide. Mineral dusts used as extenders to control viscosity, texture, and gloss include talc, clay, calcium car-

TABLE 15.2 Paint Resins

Resin	Manufacturing Method
Acrylic	Polyvinylidene compounds derived from the esters of acrylic and methacrylic acid. A common resin is polymethylmethacrylate.
Alkyd	Interaction of a polycarboxylic or fatty acid or its anhydride (e.g., phthalic anhydride), a polyhydric alcohol (e.g., glycerol), and a vegetable oil or its fatty acid.
Amino	Formed by the condensation polymerization of an aldehyde with an amine or amide—the principal resins are urea-formaldehyde and melamine-formaldehyde polymers.
Epoxy	Produced by condensation polymerization between epichlorhydrin and diphenylol-propane (bisphenol A).
Phenolic	Low molecular weight resins formed when an aromatic compound with a hydroxyl group attached to the benzene nucleus reacts with an aldehyde such as formaldehyde in the presence of a catalyst.
Polyurethane	Polymers formed by the reaction of isocyanates with hydroxy compounds. If a diisocyanate reacts with an aliphatic glycol (diol), a linear polymer is formed. A cross-linked polymer is formed when the diisocyanate reacts with water and polyols such as vegetable oils, polyesters, and polyethers.
Vinyl	One hydrogen of monosubstituted ethenes (i.e., ethylene) replaced by the hydroxl, chloride, acetate, or other groups, The principal paint binders are polyvinyl chloride and polyvinyl acetate. Copolymers are also used as binders.

TABLE 15.3 Common Pigments

White pigments		*Black pigments*	
Titanium dioxide	TiO_2	Black iron oxide	Fe_3O_4
Zinc oxide	ZnO	Carbon blacks	
Antimony oxide	Sb_2O_3		
White lead	$2PbCO_3 \cdot Pb(OH)_2$	*Yellow organic pigments*	
		Hansa yellows	
Yellow inorganic pigments		Benzidene yellow	
Lead chromates	$PbCrO_4$		
Zinc chromates	$ZnCrO_4$	*Green organic yellows*	
Yellow iron oxides	$Fe_2O_3 \cdot H_2O$	Pigment green B	
Cadmium yellows	CdS		
		Blue organic pigments	
Green inorganic pigments		Phthalocyanine blue	
Chromium oxide	Cr_2O_3		
Lead chrome greens	$PbCrO_4 \cdot KFe[Fe(CN)_6]$	*Red Organic Pigments*	
		Toluidine reds	
Blue inorganic pigments		Arylamide reds	
Prussian blue	$KFe[Fe(CN)_6]$		
Ultramine blue	$3Na_2O_3 \cdot 3Al_2O_3 \cdot 6SiO_2Na_2S$		
Red inorganic pigments			
Red iron oxide	Fe_2O_3		

bonate, barite, and both crystalline and amorphous silica. The pigments and extenders do not represent an exposure during brush or roller application, but during spray painting and preparation of the surface by sanding or abrasive blasting prior to repainting, these materials are released to the air and may present significant exposures. Pigments based on lead, cadmium, and chromium compounds present a critical exposure during spray application and surface preparation.

The solvents used in the more than 20,000 available paint products are based on the materials listed in Table 15.4. Additives to hasten drying, reduce skin formation in the can, and control fungus are added to paints. The fungicides warrant special attention because the ingredients, including copper and zinc naphthenate, copper oxide, and tributyltin oxide, are biologically active.

15.2.1.2 Water-Based Paints. Water-based paints now represent 15–20% of construction and industry paints, and expanded use is anticipated. The present systems use binders based on copolymers of several monomers including acrylic acid, butyl acrylate, ethyl hexyl acrylate, and styrene. The other major ingredients and their maximum concentrations include pigments (54%), coalescing solvents (15%), surfactants (5%), biocides (1.1%), plasticizers (2.2%), and driers (lesser amounts). The pigments include the conventional materials mentioned under solvent-based paints. Coalescing solvents, including hydrocarbons, alcohols, esters, glycol, and glycol ethers and esters, although present in low concentrations, may present an inhalation hazard. The proprietary biocides frequently result in exposure to significant airborne formaldehyde concentrations. The surfactants include known skin irritants and sensitizers.

Special attention must be given to two-component epoxy and urethane paint systems. The urethanes consist of a polyurethane prepolymer containing a reactive isocyanate; the second component is the polyester. Mixing the two materials initiates a reaction that results in the formation of a chemically resistant coating. In the early formulations, the unreacted toluene diisocyanate (TDI) resulted in significant airborne exposures to TDI and respiratory sensitization of workers. Formulations have been changed to include TDI adducts and derivatives that minimize the respiratory hazard from these systems. The urethane–polyester system includes a blocked isocyanate which is not activated until an oven temperature of 250ºC (480ºF) is reached. In this system, the unreacted monomer content is less than 0.01%

Epoxy paint systems offer excellent adhesive properties, resistance to abrasion and chemicals, and stability at high temperatures. The conventional epoxy system is a two-component system consisting of a resin based on the reaction products of bisphenol A and epichlorohydrin. The resin may be modified by reactive diluents such as glycidyl ethers. The second component, the hardener or curing agent, was initially based on highly reactive amines. The use of low molecular weight aliphatic amines such as diethylenetetramine and triethylenetetramine, both strong skin irritants and sensitizers, presented major health hazards during the early use of epoxy systems. This has been overcome to a degree by the use of low-volatility amine

TABLE 15.4 Partial List of Paint Solvents

Aromatic	**Chlorinated Solvents**	**Acetates**
Benzene	Methyl chloride	Ethyl
Toluene	Chlorothene	Isopropyl
Xylene	Carbon tetrachloride	*n*-Propyl
Aromatic naphthas	Ethylene dichloride	Secondary butyl
Aromatic petroleum solvents	Trichloroethylene	*n*-Butyl
	Perchloroethylene	Amyl
Others	**Terpenes**	**Ketones**
Aliphatic	Turpentine	Acetone
Petroleum ether	Dipentene	Methyl ethyl ketone
Lacquer diluent	Pine oil	Methyl acetone
VM and P naphtha	**Alcohols**	Methyl isobutyl ketone
Mineral spirits	Methanol	Diacetone
Odorless mineral spirits	Ethanol	Cyclohexanone
Kerosene	Isopropyl alcohol	Isophorone
High flash naphthas	*n*-Propyl alcohol	Diisobutyl ketone
Others	*n*-Butyl alcohol	
Glycol ethers	Secondary butyl alcohol	
Several commercial grades	Amyl alcohol	
	Cyclohexanol	
	Others	

Source: *Surface Preparation and Finishes for Metals* by J. Murphy. Copyright 1971. Used with permission of McGraw-Hill Book Co.

adducts and high molecular weight amine curing agents.The epoxy powder system includes an amine catalyst which is activated at an oven temperature of 350ºC (660ºF). Insofar as dermatitis is concerned, the epoxy resins can be divided into three grades. The solid grades are felt to be innocuous; however, skin irritation may occur from solvents used to take up the resin. The liquid grades are mild to moderate skin irritants. The low-viscosity glycidyl ether modifiers are skin irritants and sensitizers and have systemic toxicity.

15.2.2 Liquid Paint Application Methods

In the industrial setting, paints can be applied to parts by a myriad of processes including brush, roller, dip, flow, curtain, tumbling, spray, and powder coating. Spray painting by air atomization is the most common application method encountered in industry and presents the principal hazards. To a large degree the hazard in a given spray paint operation depends on the transfer efficiency of the paint application method. Transfer efficiency denotes the percentage of the paint that is deposited on the workpiece; the balance is lost by overspray and rebound (Figure 15.1).

The quantity of paint applied per unit time and therefore the potential amount of solvent released during the operation is impressive: a 6-in. wide brush may use 7 gal per day, a 9-in. roller may use 14 gal per day, and air spray use varies from 10 to 70 gal per day. The operator is exposed to the solvent vapor in processes in which

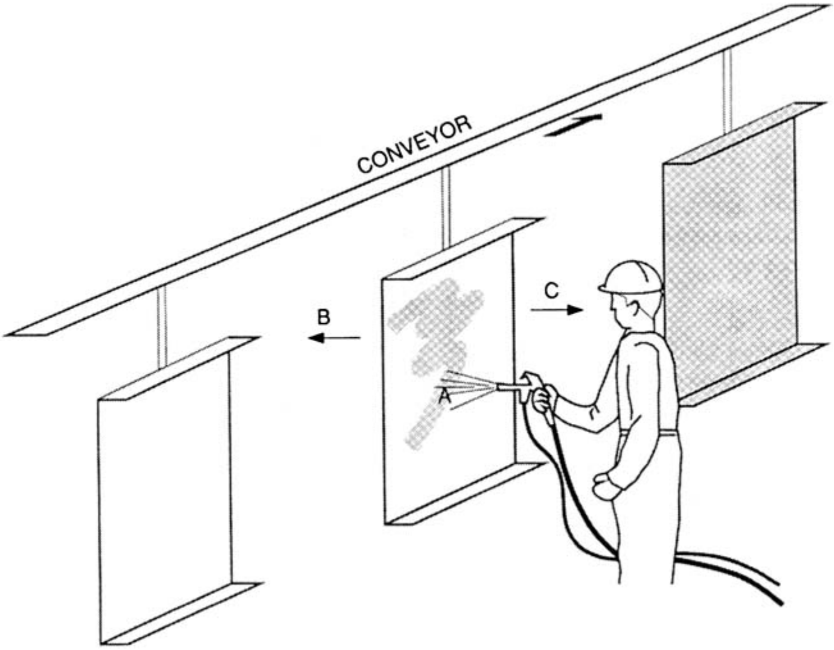

Figure 15.1 Spray painting showing the fate of paint released from the spray gun: (*A*) deposition on the workpiece, (*B*) overspray, and (*C*) rebound. Transfer efficiency is the percentage of the total paint released from the gun that deposits on the workpiece.

the paint is flowed on, as in brushing and dipping, and during drying. However, during atomization techniques, the exposure is to both the solvent and the paint mist. The worker's exposure depends on the overspray and rebound that occurs during spraying. The principal spray painting methods used in industry are described below, with extensive citations from industry application data (Hund, 1993).

15.2.2.1 Air Atomization. In this painting system the paint is conveyed from a paint reservoir by either siphon pickup created by the airflow or, in the case of heavy viscous or high solids paints, the reservoir is pressurized and the paint flows to the spray gun (Figure 15.2*a*). In either case, compressed air atomizes the paint at the nozzle to form droplets or mist, releases the droplet cloud from the gun, and conveys it to the workpiece. The atomization can take place external to the gun in the zone between the horns of the nozzle tip or inside the gun itself. The system commonly used in industrial finish painting is an external mist-generating system with pressure feed (Figure15.2*b*). This system requires high airflow, generates fine particles (fog) and has a low transfer efficiency in the range of 25–30%. If the paint is heated to lower its viscosity, the pressure used in the system can be reduced with a resulting reduction in overspray and rebound and an increase in transfer efficiency.

15.2.2.2 Low Pressure–Low Volume. This system utilizes a special air-atomizing gun with low pressure air jets impinging on a primary stream of paint to provide the atomization mechanism. The paint fluid stream exits separately from the gun and is introduced into a secondary tip zone. The solid elliptical-shaped paint stream is atomized externally by two small air jets. The atomization is not as fine as conventional air atomization; however, rebound is reduced and transfer efficiencies in the range of 60–80% are achieved. Low pressure–low volume spraying has seen wide application in the furniture, automobile, and general metal finishing industries for low to medium viscosity paints.

15.2.2.3 High Volume–Low Pressure. The high volume–low pressure system uses compressed air at 3–6 psig and air flows of approximately 20 cfm to atomize the paint. The paint mist size is in the range of 1–50 μm. Since the air pressure is lower than conventional air atomization, there is a reduction in overspray and rebound with resulting transfer efficiencies in excess of 65%. A number of environmental regulatory agencies have recognized the advantages of this system and have restricted spray painting operations to either high volume–low pressure or electrostatic. Frequently this system is chosen over electrostatic painting for water-based paints since electrostatic systems require special isolation of all paint reservoirs. In adddition to its high transfer efficiency and resulting environmental advantages, this system produces a high quality finish with minimal loss of paint. In conventional air atomization, 2 gal of paint are lost by overspray and rebound for every 3 gal sprayed. In the high volume–low pressure system, this loss is reduced to 1 pint of paint for each gallon sprayed.

15.2.2.4 Airless. The airless paint system forces the paint through a fine orifice at pressures of 500–4500 psig to mechanically atomize the paint. A tungsten carbide nozzle is necessary if the airless system is used with a water-based paint

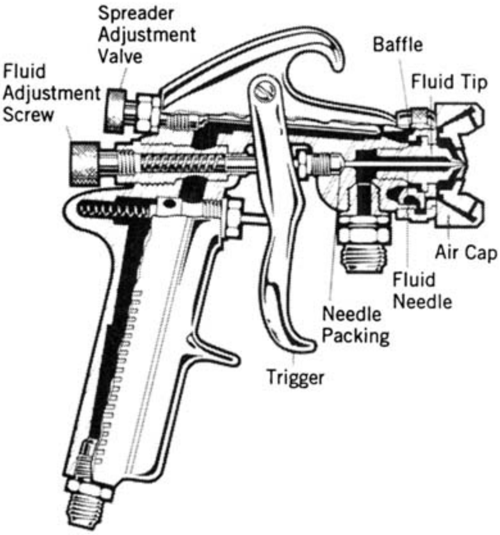

(*a*)

Figure 15.2*a* Conventional air atomization spray gun. Source: Courtesy of DeVilbiss Industrial Coating Equipment.

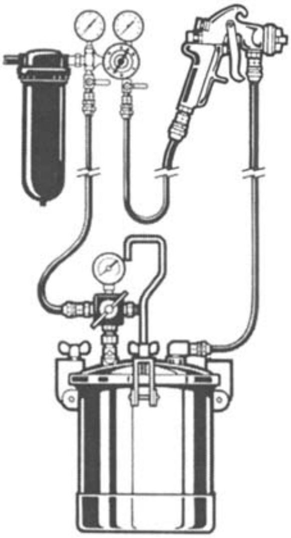

(*b*)

Figure 15.2*b* Pressure feed tank hookup. Source: Courtesy of DeVilbiss Industrial Coating Equipment.

owing to the abrasive action of the paint at high pressure. The particle distribution is wide, with the majority of the mist particles in the 100- to 500-μm range. The discharge momentum of the paint mist carries it to the workpiece; rebound and overspray are reduced compared to conventional air atomization and transfer efficiencies of 40 to 50% are obtained. Because of its performance characteristics, airless spraying is widely used in construction and architectural painting.

The velocity of the mist particles in the immediate vicinity of the gun is very high and particles may be injected subdermally if the gun is held close to the skin. To protect the operator a plastic spacer (duck bill) is mounted at the discharge point.

15.2.2.5 Air-Assisted Airless. In the air-assisted mode, the airless system described above provides a first-stage coarse aerosol. This primary aerosol stream is then immediately hit with compressed air jets from external horns on the nozzle of the gun to provide secondary atomization with a resulting paint mist diameter range of 100–200 μm. The performance of this system equals the performance of conventional air atomization. The transfer efficiency of this system is 45–60%.

15.2.2.6 Electrostatic. This system (Figure 15.3) places a negative charge on the paint particle by passing the paint mist through a corona discharge field. The charged particles are then attracted to the grounded workpiece. The early systems for fixed nozzle work utilized an external high-voltage grid between the spray gun and the workpiece. In the present designs the high voltage corona is established in the gun; the system can be used on air, airless, and air-assisted airless guns with transfer efficiencies in excess of 90%. The hand-held guns operate at voltages in

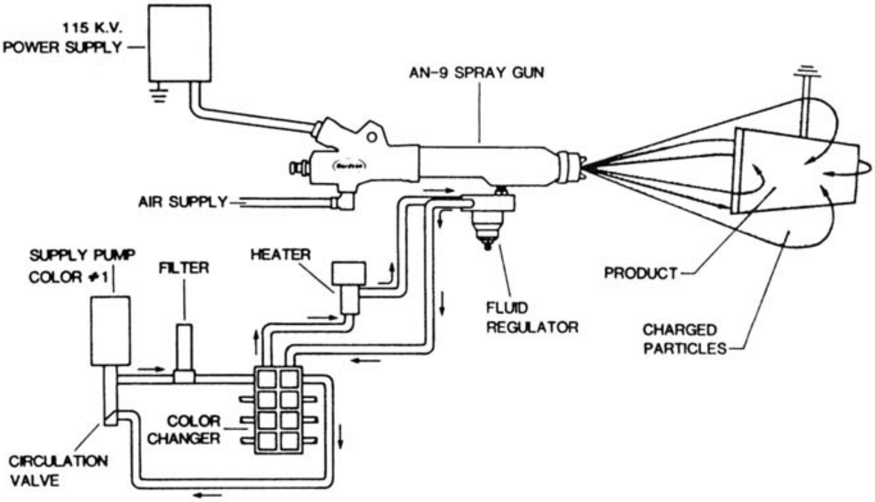

Figure 15.3 Automatic electrostatic spray gun. Source: Courtesy of Nordson Corp.

the range of 30–60 kV and a current of approximately 100 μA; owing to the low current the guns do not present an electrical hazard to the worker. The equipment has a wide application range including water-based paint, although in that mode the paint supply must be electrically isolated. Since the corona operates at low current, one presumes that significant amounts of ozone would not be formed in the corona; however, no data are available on this issue.

In another electrostatic system, a high-speed spinning disk generates a relatively homogenous paint droplet. The paint is fed to the center of the spinning disk, and the particles are formed and released at the edge of the disk. Since the disk is held at high voltage relative to the workpiece, the particles are stripped by electrostatic force from the disk and attracted to the grounded workpiece, thereby achieving transfer efficiencies in excess of 95%.

15.2.2.7 Ultrasonic. An ultrasonic spray generating technique described by Berger (1988) is used on special applications to apply thin coatings of expensive coating materials at low flow rates with a fixed applicator to coat moving webs of sheet glass, paper, or fabric. The unit operates at 20 kHz with very low dispersal energy at high transfer efficiencies so it does not present an environmental problem.

15.2.3 Powder Paint System

During the past 10 years the application of powder coating has increased dramatically. By the mid-1990s, 20% of the appliances manufactured in the United States were finished with powder; it is now used on automobile primer coats and will shortly be adopted for clear coats. A major impetus in its acceptance has been the introduction of restrictive environmental air quality regulations. Powder coating blends productivity improvements with minimal adverse environmental impact. The system is a simple one. A layer of powder incorporating all paint components is deposited on a workpiece. The workpiece is then processed through a furnace which melts the powder, converting it to a continuous paint film.

The composition of the powder mimics the composition of liquid paint with the exception that it contains no solvent. Each particle contains the resin and hardener (50–60%), pigments and fillers (40–50%), and various additives (1–2%). The common powder systems include epoxy, epoxy-polyester, polyurethane, and various enamels. In the standard powder manufacturing process, the various components are dry blended in a mixer and processed through an extruder to form a thick, viscous putty. This extrudate is then milled to form a ribbon or strip which is ground and size-classified (NIOSH, 1984). The final powder has a geometric mean diameter in the range of 20–30 μm.

The parts to be painted undergo a rigorous preparation process which may involve as few as 6 or as many as 24 cleaning steps based on the techniques discussed in Chapters 3–5. The bulk powder is fluidized to provide a particle cloud. In early systems the parts were immersed and coated directly in the powder cloud, but now the fluidized powder is usually applied with a gun dispenser. After the workpiece is coated, it passes through a furnace operating at temperatures of

160–250ºC (320–480ºF) where the powder melts to form a continuous film and hardening takes place. Enamels based on metallic oxide frits are fired at temperatures in the range of 780–830ºC (1440–1530ºF).

15.2.4 Powder Coating Application Methods

In the powder gun shown in Figure 15.4 the powder is conveyed through a corona discharge (60–100 kV) where the powder particles pick up a negative charge; they are then directed by the electrostatic field to the grounded workpiece and deposit as a uniform coating. If the workpiece geometry is complex, there will be poor deposition of the powder at angles and recesses because of the Faraday cage effect. In this case a different powder gun is used, one in which the particles obtain a positive charge by triboelectrification. The powder laden airstream passes through Teflon tubing where electrons are stripped off. The positively charged particles are deposited

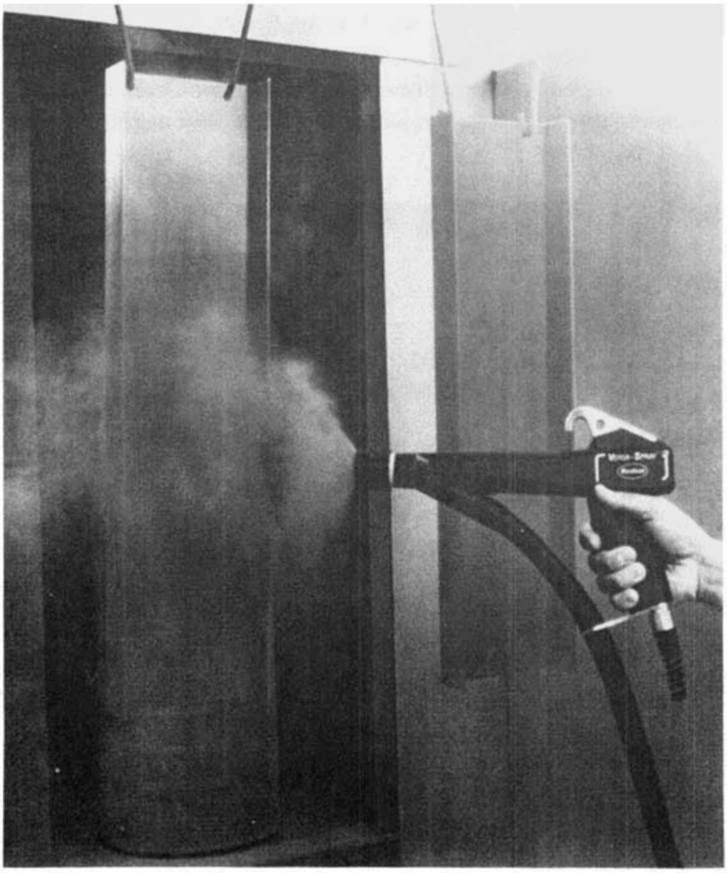

Figure 15.4 Corona electrification powder dispensing gun. Source: Courtesy of Nordson Corp.

on the workpiece with high efficiency and achieve better deposition in difficult areas than the negatively charged particles. The transfer efficiency of the powder system is in the high 90% range, so little powder is lost from the hood. However, no air-sampling data are available to demonstrate the dust exposure of the operator.

The powder dispensing gun may be operated (1) manually, (2) in a fixed position with automatic triggering to activate coating only when the conveyorized workpiece passes the gun station, or (3) by an active robotic system. Manual operation is shown in Figure 15.5 in a powder spray booth. The automatic application head is best illustrated by the tunnel operation shown in Figure 15.6. In both cases the inward airflow through the open face of the partially enclosing hood collects any fugitive powder losses for collection and reuse. The powder can be recovered in a number of different ways—it can settle onto a slow-moving belt on the hood floor and be continuously vacuumed off for reuse; an integral two-stage cyclone filter system may be installed to collect the material; or a bank of cartridge filters collects the powder and it is recovered by reverse-jet cleaning. The manufacturers of powder coating equipment state that powder utilization approaches 99%. The cartridge filter system is applicable on operations using a number of different colored powders.

The system described above represents an application approach that is modeled after a wet paint system, that is, the part is fabricated first and then painted. A new

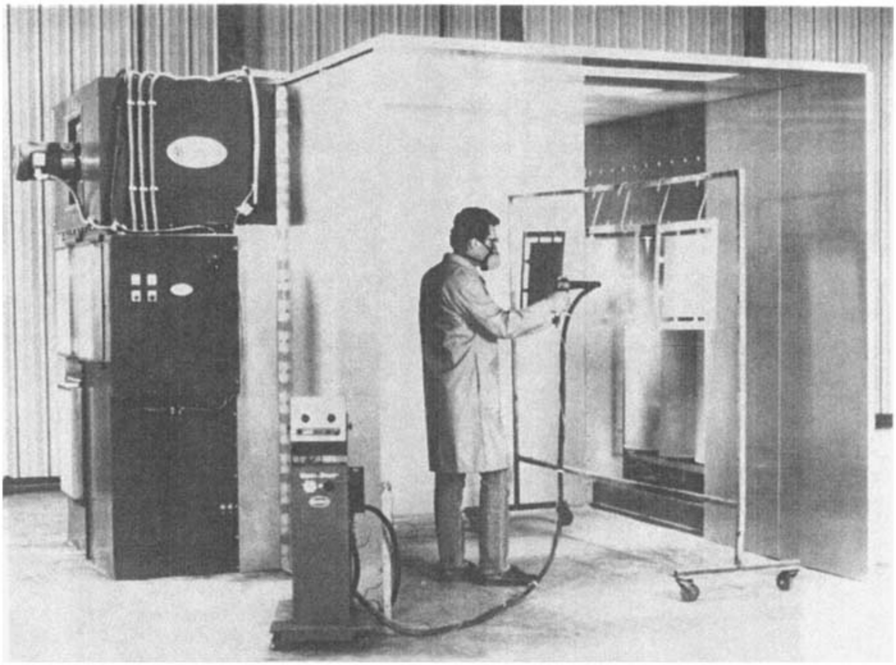

Figure 15.5 Manual powder spraying in open-faced booth. Source: Courtesy of Nordson Corp.

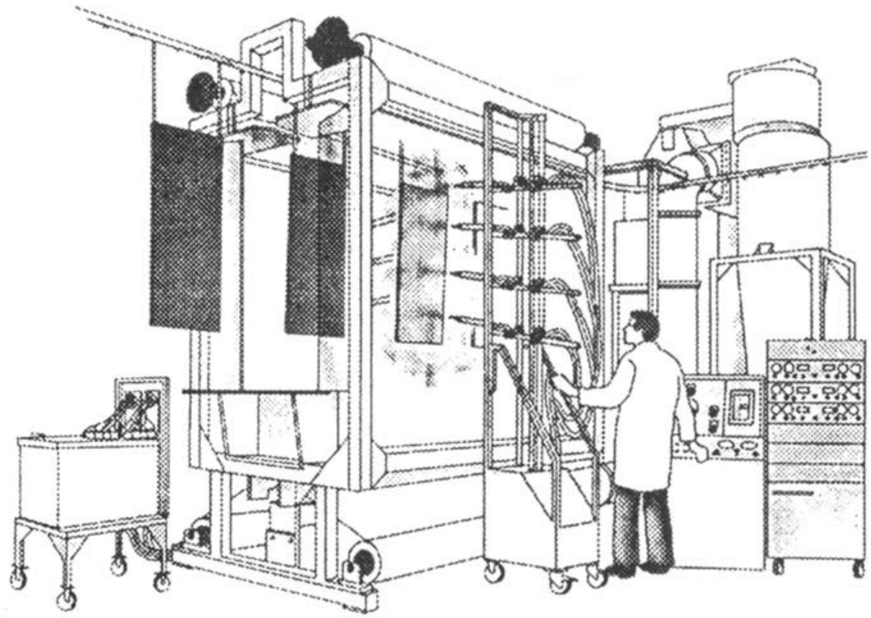

Figure 15.6 Automatic powder spraying in tunnel booth. Four powder coating guns are coating rectangular metal panels moving from right to left on a conveyor. Plastic film defines the ceiling, walls, and floor of the booth. The film is easily replaced from stock rolls located at floor level to provide a fresh interior when a color change is made. The powder overspray is collected for reuse in a high efficiency cyclone located to the right of the operator. A second stage high efficiency cartridge filter cleans the air before it is recirculated to the plant. Source: Courtesy of Gema Volstatic.

approach involves painting the base stock before the components are fabricated; minor touch-up painting is completed after assembly. The production advantages of this approach are many and include its application to "just in time" manufacture. The precoating technique may present occupational health exposures if the coating is thermally stressed in the fabrication steps, resulting in the release of thermal degradation products of the paint (See Chapter 10 for a more detailed discussion of this topic).

15.3 WORKER EXPOSURE PROFILE

15.3.1 Solvent and Mist Concentrations

In a review of solvent exposures in Danish manufacturing and service industries, a series of 72 air sampling measurements were conducted during spray painting. Thirty-eight percent of the mixed solvent exposures exceeded 0.25 of the ACGIH threshold limit value, time weighted average (TLV-TWA), 29% were between 0.25 and 1.0 of the ACGIH TLV-TWA, and 33% exceeded the combined ACGIH TLV-TWA (Olsen and Seedorff, 1990).

Myer et al. (1993) provide extensive air-sampling data on the application of a product line of paints which includes an isocyanurate resin with a residual monomer content of less than 0.3% and a polyisocyanate resin whose free monomer content is 0.7 at the time of manufacture but rises to a maximum of 1.6% during storage. Over an 8-yr period, 28 spray-painting operations were studied in addition to selected brush and roller applications; the brush and roller data were grouped for discussion with a limited number of samples from paint mixing and preparation operations. The air sampling programs covered a wide application range, including in-plant manufacturing, transportation, and construction sectors. The authors sampled for the hexamethylene diisocyanate (HDI)-based monomer with an assigned ACGIH TLV-TWA of 5 ppb and a ceiling limit of 20 ppb proposed by the manufacturer. There is no TLV for the HDI polyisocyanate; however, the manufacturer established a guideline limit of 1.0 mg/m^3 and an 8-hr TWA guideline of 0.5 mg/m^3.

Since this is the most comprehensive data in the industrial hygiene literature on isocyanate spray painting exposures, the air-sampling results are presented in Tables 15.5 and 15.6. The area sampling data presented in the original paper are not included in this review. As shown in the nonspray data in Table 15.5, the HDI polyisocyanurate results were all less than 3.5% of the manufacturer's guidance value of 1.0 mg/m^3. The geometric mean values of the HDI concentrations were all less than one-third of the ACGIH TLV-TWA of 5 ppb. The spray painting data shown in Table 15.6 indicate that the manufacturer's guidance level of 1.0 mg/m^3 was exceeded in several industrial segments; in some cases the value exceeded the guidance level by a factor of 10. Exposures to HDI in excess of the ACGIH TLV-TWA also occurred. In all cases the air samples were taken outside of any respiratory protective device in use at the time.

After successfully demonstrating correlation in the laboratory between passive badge and activated charcoal tube sampling for organic vapors by sample placement on opposite shirt lapels, van der Wal and Moerkerken (1984) conducted similar sampling in the plant. In the real world tests the two sampling methods did not give comparable results. The authors retreated to the laboratory to evaluate the impact of major fluctuations in solvent vapor concentrations during the sampling period and variations in air velocity across the face of the passive sampler. Neither variable could explain the differences noted in the field study. Further laboratory studies under active painting conditions demonstrated that the differences in the noted concentrations at the two lapel locations were real and the local vapor concentrations could vary greatly within the breathing zone depending on the location of the sampler relative to the generation point. The authors caution investigators sampling spray painting operations to extend care in positioning the personal sampler to obtain valid exposure data.

A survey of 46 automobile shops involving 64 workers who did spray painting intermittently, with the balance of the shift devoted to preparation of the body work, was conducted in Australia (Winder and Turner, 1992). Thirty percent of the shops used only an acrylic-based paint, 20% used only a polyurethane paint, and the balance used both paint systems. Two thirds of the shops had local exhaust

TABLE 15.5 Summary of Personal Isocyanate Sampling in Nonspray Operations

		HDI Concentration (ppb)			Desmodur N Concentration (mg/m$^{3)}$		
Industry Segment	Samples	Geometric Mean	Range 5th–95th Percentile	% Nondetected[a]	Geometric Mean	Range 5th–95th Percentile	% Nondetected[a]
Industrial	6	0.39	0.10–0.90	50	—	—	100[b]
Transportation-OEM	12	—	—	100[b]	—	N.D.[c]—0.127	92[b]
Repackaging/formultation	39	1.29	0.95–7.20	0	—	—	100[b]
Maintenance/construction	16	1.51	0.20–15.6	31	—	N.D.[c]—0.127	73[b]
Laboratory	12	0.11	0.05–0.4	50	—	N.D.[c]—0.08	92[b]

Source: Adapted from Myer et al. (1993). Courtesy of the American Industrial Hygiene Association.

[a] For purposes of calculating the geometric means and the 5th–95th percentile ranges, samples in which analytes were nondetectable were assigned a value of 1/2 the limit of detection.

[b] This category contained greater than 50% nondetectable samples and, therefore, may result in ". . . biased or imprecise statements of the geometric mean . . ." Thus, no geometric mean was presented. The values presented range from nondetectable to the 95th percentile range of the detectable values.

[c] The geometric mean of the LOQs for the nondetectable Desmodur N samples were 0.030 mg/m^3 and the 5th–95th percentile range was 0.008 to 0.100 mg/^{3}.

TABLE 15.6 **Summary of Personal Isocyanate Sampling in Spray Operations**

Industry Segment	Samples	HDI Concentration (ppb) Geometric Mean	HDI Concentration (ppb) Range 5th–95th Percentile	HDI Concentration (ppb) % Nondetected[a]	Desmodur N Concentration (mg/m^3) Geometric Mean	Desmodur N Concentration (mg/m^3) Range 5th–95th Percentile	Desmodur N Concentration (mg/m^3) % Nondetected[a]
Industrial	13	—	N.D.[c]–1.78	54[b]	0.058	0.005–3.60	38
Transportation aftermarket	35	4.8	0.09–20.0	26	2.73	0.43–9.70	3
Transportation OEM	55	—	N.D.[c]—67.2	71[b]	0.68	0.015–10.0	11
Heavy equipment/military	25	5.3	1.0—17.0	12	1.68	0.18–12.0	0
Maintenance/construction	16	8.1	0.65–38.9	6	1.40	0.15–9.9	0
Wood/furniture	11	3.5	1.1–15.0	0	0.69	0.17–1.70	0

Source: Adapted from Myer et al. (1993). Courtesy of the American Industrial Hygiene Association.

[a] For purposes of calculating the geometric means and the 5th–95th percentile ranges, samples in which analytes were nondetectable were assigned a value of 1/2 the limit of detection.

[b] This category contained greater than 50% nondetectable samples and, therefore, may result in ". . . biased or imprecise statements of the geometric mean. . . ." Thus, no geometric mean was presented. The values presented range from nondetectable to the 95th percentile range of the detectable values.

[c] The geometric mean of the LOQs for the nondetectable HDI samples was 0.19 ppb and the 5th–95th percentile range was 0.003–7.40 ppb.

control and the balance used general exhaust. Reusable combination paint mist and vapor air-purifying respirators were available in all shops; however, approximately one half of the workers used nuisance-type respirators. Airline respirators were available in one tenth of the shops, but were used only occasionally. The air concentrations of solvent vapors were low, with a mean concentration of one fifth of the occupational exposure standard. The authors state that the conditions noted in the study are probaby representative of small repair shops where work is intermittent and of short duration.

Jaycock and Levin (1984) conducted a detailed review of the health hazards in a single body shop which they felt was typical of a 2- to 4-man "bump and paint" operation. A spray booth designed for a nominal face velocoty of 100 fpm was used for the majority of the painting, although some of the work was done in the main bay and relied on general exhaust ventilation for control. Principal attention was given to solvent vapors and paint pigments. The complexity of the workplace exposure profile in a small shop was evident; 36 solvents were present in the small number of paints in routine use. The full-shift TWA concentration rarely exceeded the ACGIH TLV-TWA, however, the TLV-STELs were commonly exceeded. The authors did not sample for diisocyanates since a satisfactory method was not available. Although air sampling was conducted for chromium, cadmium, and lead, only chromium was present in detectable concentrations. Solvent exposures were much higher during the winter heating season; in part this was due to the deficiency in replacement air.

The exposure to organic solvents of 40 car painters in 6 Swedish shops was characterized by 1-hr air sampling during work periods which the authors felt reflected a normal work pattern (Kurppa and Husman, 1982). As shown in Table 15.7, all air concentrations were less than one half the ACGIH TLV.

A Danish study by Hansen et al. (1987) is a comprehensive review of the potential occupational health problems associated with the new generation of water-based paint. Although the work was conducted in architectural settings, it does offer insight into the health hazards in industrial applications. The study was prompted by the fact that by the mid 1980s, approximately 90% of all construction paints in

TABLE 15.7 Solvent Exposure of Auto Body Workers

Solvent	Highest Concentration found (ppm)	Mean concentration (ppm)	Percentage of the ACGIH TLV
Toluene	250	30.6	30.6
Xylene	36	5.8	5.8
Butyl acetate	130	6.8	4.5
White spirit	150	4.9	4.9
Mcthyl isobutyl ketone	39	1.7	3.4
Isopropanol	85	2.9	0.7
Ethyl acetate	33	2.6	0.7
Acetone	25	3.1	0.3
Ethanol	27	2.9	0.3

Source: Adapted from Kurppa and Husman (1982).

TABLE 15.8 Minimum and Maximum Concentration of Raw Materials in Water-Based Paints

Chemical Compound	Content (% w/w)
Water	26–86
Biocides	0– 1.1
Surfactants	0.7– 5
Pigments/extender pigments	0–54
Binders	
Latex (dry weight)	6–27
Alkyds (dry weight)	6–14
Coalescing agents/cosolvents	0–15
Amines	0– 0.5
Plasticizers	0– 2.2
Driers (siccatives)	0– 0.6
Others	0– 4

Source: Adapted from Hansen et al. (1987). Courtesy of *Scandinavian Journal of Work, Environment and Health.*

Denmark were water-based. The study included 34 water-based products, including both high-quality acrylic latex paints formed with acrylic copolymer binders for indoor/outdoor work and lower-quality indoor paint formed with acrylic copolymers. The contents of the raw materials in the water-based paints are summarized in Table 15.8; since the latex paints do not contain pigments, plasticizers, and driers, a number of these categories show zero concentration. The binders in the water-based paints are based on the monomers listed in Table 15.9. The latices are produced by emulsion polymerization of the monomer with droplets dispersed in water. The latex binders may be copolymers based on 2–5 monomers including butyl acrylate, acrylic acid, and styrene. The high molecular weight polymers (approximately 1,000,000) have negligible toxicity. The latices are not solvent-free; solvents are added in low concentrations for proper film formation during application of the paint. The solvent may be used alone or as a complex solvent mix. The maximum solvent concentrations present in the 34 paints in the Danish study are noted in Table 15.10. The residual monomer concentration is in the hundreds of parts per million range.

Biocides used to maintain stablility of paint in can storage include the chemicals listed in Table 15.11. The authors state that the paint manufacturer may purchase a proprietary biocide, which may contain a number of the individual compounds listed. The common pigments for the white paints in the study include clays, mica, talc, zinc oxide, and titanium dioxide. The pH of the paint is adjusted with ammonia. A series of driers includes cobalt naphthenate and barium, cobalt, and zirconium octoates.

An extension of this review included short-period air sampling conducted for periods of 20 min at 15 work sites to define worker exposure. As noted in Table 15.12, the concentrations of most of the volatile components were low except that

TABLE 15.9 Monomers for Latex Production in Water-Based Paints

Chemical Compound	Typical amount (% w/w)
Acryamide	
Acrylonitrile	0.001
Acrylic acid	
Butyl acrylate	0.02–0.06
Butyl methacrylate	
2-Ethylhexyl acrylate	0.01
Methacrylic acid	
Methyl methacrylate	0.01
Styrene	0.01–0.04
Vinyl acetate	
Vinyl ester of Versatic 10® (VeoVa 10®)[a]	

Source: Hansen et al. (1987). Courtesy of *Scandinavian Journal of Work, Environment and Health.*

[a] Versatic 10® is a mixture of branched acids with nine carbon atoms.

formaldehyde, ammonia, mineral spirits, and ethylene glycol butyl ether were in the range of 0.25–1.0 of the occupational exposure limit. Sensitization from the biocides is not considered a real problem since, although theoretically possible, the chemical biocide concentrations are too low to initiate sensitization. Skin irritation may occur from the surfactants. The residual monomers were not considered a problem because of their low concentration.

Bjerre (1990) proposed a six-parameter mathematical model to predict the average and maximum air concentrations of solvent vapor during spray painting. In discussing an air-sampling strategy for reactive elements in an epoxy paint mist, Herrick and Smith (1988) stress that the resin molecules in the mist are undergoing cross linking with curing agents; this reaction starts at the time of mixing and continues while the material is airborne. The complexity of the spray painting mist is also identified by D'Arcy and Chan (1990), who remind the industrial hygienist that the aerosol is a complex mixture of organic binder, organic pigment, solid inorganic pigment, curing agent, and residual solvent.

15.3.2 Particle Size of Paint Mist

The conversion of an automobile paint system from a lacquer to a high solids paint prompted Chan et al. (1986) to evaluate the particle size of the paint mist. Base and clear coat application by conventional air atomizing manual and robotic systems operating at 200–1356 psig had a mass median aerodynamic diameter (MMAD) of 4–12 μm depending on the air pressure. The clear coat application by a rotary atomizer with rotational speeds of 17,000–40,000 rpm generated particles of 20–35 μm.

TABLE 15.10 Solvents in Water-Based Paints

Chemical Compound	Maximum Content (% w/w)
Hydrocarbon mixtures	
Turpentine	0.3
White spirit	2
Xylene[a]	0.01
Alcohols	
Ethanol	0.1
2-Propanol[a]	0.01
1-Butanol[a]	0.01
Esters	
"Isobutanolesters of dicarboxylic acids"	1
Glycols	
Ethylene glycol	2
Propylene glycol	10
Hexylene glycol	5
Oxybispropanol[a]	0.1
Polypropylene glycol[a]	1
Glycol ethers/esters	
Ethylene glycol ethyl ether (2-ethoxyethanol)[a]	1.1
Ethylene glycol butyl ether (2-butoxyethanol)[a]	1.4
Ethylene glycol phenyl ether (2-phenoxyethanol)	5
Diethylene glycol methyl ether (2-(2-methoxyethoxy)ethanol	4
Diethylene glycol ethyl ether (2-(2-ethoxyethoxy)ethanol[a]	1
Diethylene glycol butyl ether (2-(2-butoxyethoxy)ethanol)	1.5
Dipropylene glycol methyl ether (1-(2-methoxy-2-methylethoxy)-2-propanol)	4
Ethylene glycol ethyl ether acetate (2-ethoxyethyl acetate)[a]	0.02
2,2,4-Trimethyl-1,3-pentanediol diisobutyrate (Kodaflex TXIB®)	6
2,2,4-Trimethyl-1,3-pentanediol monoisobutyrate (Texanol®)	5

Source: Hansen et al. (1987). Courtesy of *Scandinavian Journal of Work, Environment and Health.*

[a] Present as one of the raw materials.

Ackley (1980) characterized the MMAD of lacquer mist as 6.4 μm with a standard deviation of 3.4; an enamel had a MMAD of 5.7 with a standard deviation of 2.0. In both cases, spray painting was conducted by conventional air atomization.

15.4 CONTROL TECHNOLOGY

The two major determinants of exposure in the painting workplace are the toxic components of the paint and the application technique. The ideal joining of these two issues would result in a paint without toxic components, applied with a technique that deposits all of the paint on the workpiece. This is an ideal which cannot be attained, however, a number of advances permit us to more closely approach that ideal.

15.4.1 Paint Systems and Application Techniques

The form of a given paint may be modified to provide the same performance while reducing the potential exposure to workers. As an example, the following actions have been taken over the past two decades in the design of isocyanate paint systems. In order to reduce the concentration of the monomeric isocyanates, chains of

TABLE 15.11 Biocides in Water-Based Paints

Chemical Compound	Maximum Content (% w/w)
Aliphatic nitrogen-containing and heterocyclic sulfur-containing compounds (isothiazolinones?)	—
1,2-Benzisothiazolin-3-one	0.05
Benzyl alcohol mono(poly)-hemiformal	0.3[a]
Carbendazim	0.1
1-(3-Chlorallyl)-tetraazaadamanatan hydrochloride	0.2[a]
5-Chlor-2-methyl-4-isothiazolin-3 one	0.003
Didecyl dimethyl ammonium chloride	0.01
Formaldehyde	About 0.1
5,8,11,13,16,19-Hexaoxatricosane	0.15[a]
3-Iodo propynyl butyl carbamate	0.16
2-Methyl-4-isothiazolin-3-one	0.003
Sodium benzoate	0.2[b]
Sodium nitrite	0.1[b]

Source: Hansen et al. (1987). Courtesy of *Scandinavian Journal of Work, Environment and Health.*

[a] Formaldehyde-releasing compounds.

[b] Also used as anticorrosion compounds.

TABLE 15.12 Air Concentration of Volatile Components in Water-Based Paints

Chemical	Content in Paint (% w/w)	Concentration in air of Work Area (mg/m^3)
Ammonia	0.01–0.15	2–12
Butyl acrylate	0.02[a]	0–2
Diethylene glycol butyl ether	1.5	4–5
Diethylene glycol methyl ether	4	8–32
Dipropylene glycol methyl ether	1	30–40
Ethylene glycol butyl ether	0–1.4[b]	2–60
Ethylene glycol phenyl ether	1.7	0–0.7
Formaldehyde	—[c]	0–0.40
Propylene glycol	0.4–8	2–70
Texanol®[d]	1–5	0.5–12
Triethylamine	0.5	4–6
White spirit	0.9	40–75

Source: Adapted from Hansen et al. (1987). Courtesy of *Scandinavian Journal of Work, Environment and Health.*

[a] According to producers the concentration in the binders was probably in the range of 0.02–0.06%.

[b] In one of the list of ingredients, the chemical was not mentioned, but it was found in the air.

[c] The value, as a rule, is unknown. The chemical may come from formaldehyde and formaldehyde-releasing compounds used as biocides or from other raw materials.

[d] 2,2,4-Trimethyl pentane-1,3-diol monoisobutyrate.

the monomers (oligimers) have replaced the straight monomers in many paint systems (NIOSH, 1990). As noted earlier, a number of systems may be used to block the isocyanate group until the reaction is initiated by heating. A major occupational health problem with epoxy paint systems is due to the amine curing agent. O'Brien and Hurley (1982) recommend the substitution of less toxic polyamide resins.

The major study of water-based paints and worker exposure cited earlier (Hansen et al., 1987) confirms that these systems represent an improvement over solvent-based systems and should be the paint of choice if they provide the necessary performance. Although the water-based paints are usually preferable, there may be hazardous compounds in these systems, albeit in low concentration. The authors of this study recommend that water-based paint formulations be designed to eliminate formaldehyde, minimize the unreacted monomer content in the various polymers, eliminate ethylene glycol ethers because of their reproductive hazard, and minimize the ammonia content.

Although attention has been given to the elimination of lead compounds in paint systems, it may still be present as a pigment in chrome green, chrome yellow, and molybdenum orange or as a drier in oleoresinous and alkyd paints. Also, the elimination of asbestos and crystalline silica is necessary to eliminate the hazard during subsequent surface preparation for refinishing.

The choice of the paint application system is frequently governed by production quantities and quality demands. There is a clear difference in contaminant release rates between passive coating systems such as brush, roller, dip, and flow compared to spray painting. In most industrial operations, however, spray painting will be the production choice, and there are a number of options. The best single index for workplace contamination is transfer efficiency. All other factors being equal, one should pick the system with the highest transfer efficiency.

An environmental problem frequently occurs in paint shops when conveyor hangers, racks, and hooks become heavily coated with paint. The encrustation is usually removed with chemical paint strippers, which present an exposure to the worker. Small furnaces are now available which destroy the coating by pyrolysis at 800ºC (1470ºF) to form an ash which can easily be removed.

15.4.2 Workplace Design, Work Practices, and Medical Surveillance

A number of straightforward control measures have been proposed by O'Brien (1984) to control fugitive emissions in paint mixing areas (paint kitchens) and storage areas. All storage and mixing vessels should be provided with close fitting covers designed with access ports. It should be normal design practice to equip such tanks with integral agitators since clamp-on agitators contribute to spills and resulting elevated air concentrations. All dispensing stations should be provided with collection trays and safety cans. Transfer of solvent should be done by closed-pump systems and not by open pouring.

In industrial spray painting of parts, the following simple instructions included in several state codes on spray painting should be observed by all workers:

1. Do not spray toward a person.
2. Automate spray booth operations where possible to reduce exposure.
3. Maintain a 2-ft clearance between the sides of the booth and large flat surfaces to be sprayed.
4. Keep the distance between the nozzle and the part to be sprayed to less than 12 in.
5. Do not position work so that the operator is between the exhaust and the spray gun or disk.
6. Locate the drying room so that air passing over drying objects to the exhaust hood does not pass the breathing zone of the operator.

A common exposure to organic vapors occurs when spray operators place the freshly sprayed parts on a rack directly behind them. The air movement to the spray booth sweeps over the drying parts and past the breathing zone of the operator, resulting in an exposure to solvent vapors.

Controls in the application of two-component urethane and epoxy paint systems must include excellent housekeeping, effective ventilation control, and protective clothing; moreover, in applications not effectively controlled by ventilation, the operators should wear air-supplied respirators. Adequate washing facilities should be available, and eating, drinking, and smoking should be prohibited in the work area. Dermatitis due to primary irritation and defatting from solvents or thinners as well as sensitization from epoxy systems is common. Skin contact must be minimized, rigorous personal cleanliness encouraged, and suitable protective equipment used by the operator.

In responding to a request for a Health Hazard Evaluation on the application of diisocyanate-based paints, the investigators proposed a medical surveillance program with the following elements (NIOSH, 1990):

1. A pre-placement examination that includes a comprehensive work and medical history, a smoking history, a physical examination with emphasis on the respiratory tract, a chest X-ray, and pulmonary function test of forced vital capacity, and forced expiratory volume in 1 second.

   Special emphasis should be given to pre-existing medical conditions such as asthma, emphysema, bronchitis, or cardiopulmonary disease, which could be aggravated by exposure to diisocyanates.

2. Interim medical and work histories on an annual basis.

3. If a worker develops respiratory problems which may be related to the work environment, he/she should be removed from all diisocyanate exposure until evaluated and diagnosed by an occuational medicine physician with experience in diagnosing diisocyanate-induced sensitization.

15.4.3 Ventilation

Most spray painting operations utilizing solvent-based paints require exhaust ventilation for control of solvent vapors at the point of application and during drying and baking operations. Water-based paints may require ventilation only when spray application is utilized. Flow application of solvent-based paints may require local exhaust ventilation depending on the application technique. A number of references are available that provide the necessary design criteria (ACGIH, 1992; Burgess et al., 1989; ANSI, 1985; NIOSH, 1981).

There are two main types of hoods available for in-plant use. The most common is designed to provide a lateral flow of clean air past the breathing zone of the operator with a uniform velocity distribution across the hood face, thereby minimizing worker exposure to air contaminants. Downdraft hoods are installed in heavy industry for painting large, irregularly shaped objects such as castings; since these hoods are specially design and their use is limited, they are not discussed here.

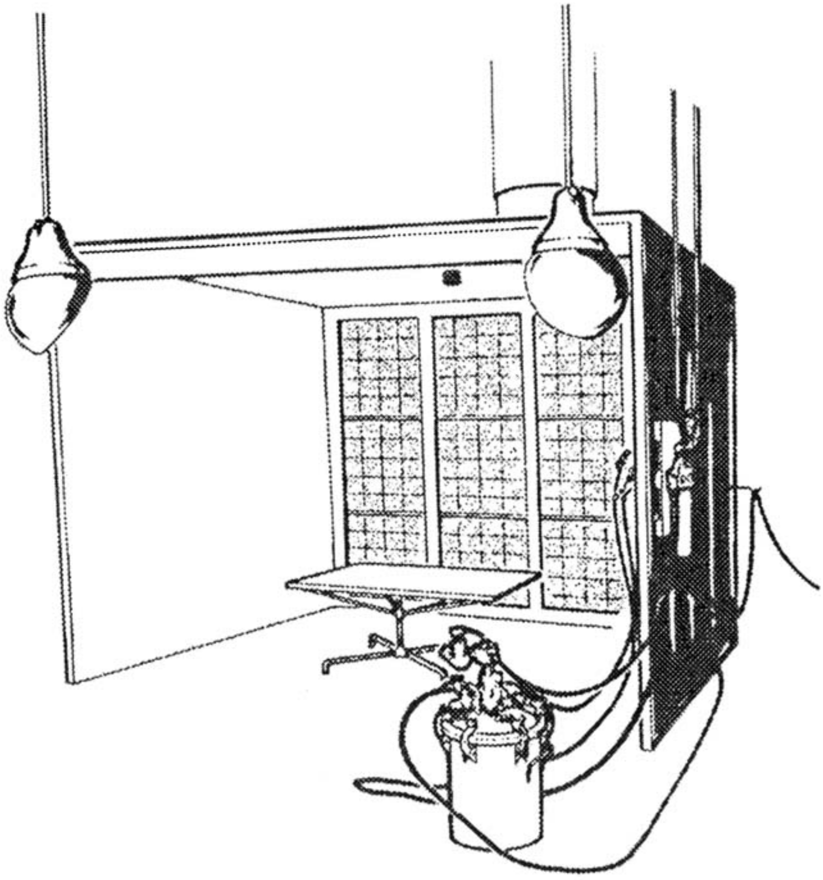

Figure 15.7 Liquid paint spray booth.

The conventional spray booth is a heavy gauge, sheet metal enclosure with one open face (Figure 15.7). The side panels and roof may have openings to allow a conveyor to bring the parts directly to the spray area. This feature is especially important in automated painting operations. The choice of hood size is primarily dependent on the size of the parts to be painted. It is important that the face area of the hood be large enough so the part does not block airflow through the hood face, which will result in poor capture efficiency. Geometry of the parts to be painted frequently requires a holding fixture or a turntable for complete spray coverage; the booth must be sized to accomodate this equipment.

Booth depth is critical to good performance since it helps to ensure a flat velocity profile at the hood face with resulting effective capture of toxic air contaminants. Rebound from flat surfaces sprayed in a shallow booth may escape capture; a deep booth will assist in the recovery of such contaminants. It is important to maintain good airflow across the entire face of the paint spray booth. This is conventionally accomplished by the use of metal baffles, dry filter pads defining the rear plenum, or by the use of a water wash curtain.

The booths are commonly equipped with some type of air cleaning component to provide paint mist removal, varying from a simple water curtain (Figure 15.8) or a throwaway dry filter to a more sophisticated scrubber. The efficiency of these devices against paint mist has not been thoroughly evaluated. There is little information on the performance of water-wash spray painting booths. Chan et al. (1986) evaluated a short-throat concurrent flow wet scrubber with a moderate pressure drop. Water, conditioned with a number of additives to improve performance and maintain clean hood surfaces, flows across the floor of the hood to the airflow exit slot where it is broken into droplets to provide the scrubbing action. The authors found the efficiency of the scrubber to be size-dependent, with efficiencies as low as 64% for paint mist particles 0.6 μm in size. The performance could be improved by increasing the pressure drop across the scrubber element or more impressively by reducing the size of the fine overspray.

The recommended face velocities for paint spray booths reflect the current thought that control of air contaminants on airless paint system operations can be achieved at lower face velocities than for conventional air atomization (Table 15.13). Once the appropriate face velocity is chosen, the open area consisting of the booth face and any openings for conveyor access must be calculated.

Replacement air must be introduced in sufficient quantity to satisfy the exhaust requirement of the spray painting booths. Frequently, the replacement air must be provided with end-point filtration to minimize surface imperfections in the paint. The location and type of diffuser for replacement air are important considerations for booth performance and control of product quality. Although it is generally good practice to have replacement air introduced at some distance from the hood, this is not so in the case of paint spray-painting booths. Travel distance will increase the opportunity for particle pickup and contamination of the painted surface. Proper placement of the booth is necessary. Hood placement in corners results in nonsymmetrical flow and a poor velocity at the face. Spray

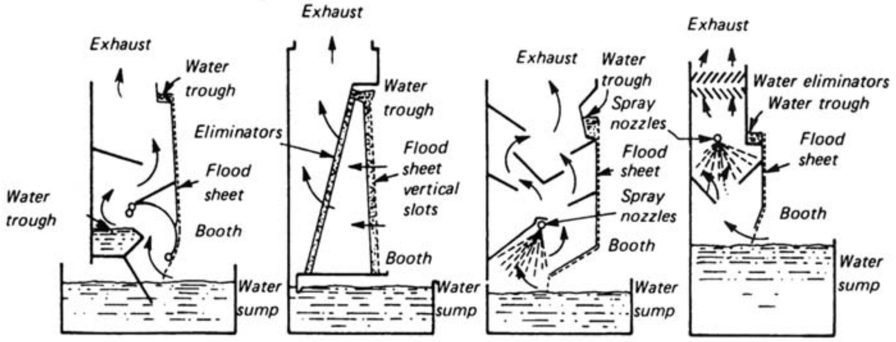

Figure 15.8 Water screen air-cleaning elements on paint spray booth.

TABLE 15.13 Recommended Face Velocities for Spray Painting Booths

	ACGIH		ANSI OSHA	
	Air Spray	Airless	Air Spray	Airless/ Electrostatic
Bench-type spray booth	150[a]–200[b]	100[a]–125[b]	150[c]–200[d]	100
Large spray booth				
Walk-in	100[e]	60	100[c]–150[d]	–
Operator outside	100–150	60–100	100[c]–150[d]	–
Auto spray paint booth	100	60	–	–

[a] Booth cross section less than 4 ft^2.

[b] Booth cross section more than 4 ft^2.

[c] Cross drafts up to 50 fpm.

[d] Cross drafts up to 100 fpm.

[e] 75 cfm/ft^2 for very large, deep booth (operator may require an approved respirator).

booths should not be placed near receiving or shipping doors where disruptive drafts may exist.

In a Health and Safety Executive report on the control of gaseous and particulate pollutants, Bradshaw (1990) stated that if one controls the airborne particles in a spray-painting operation, the solvent vapor concentration will be controlled. Under airless paint spraying at an operating ratio of 60–1 (2400 to 3000 psig) and conventional paint spraying at 40 psig, the optimum control velocity at the booth was 0.8 m/sec (150 fpm).

In a study of a paint spray booth used to finish large truck and earth-moving equipment, Bradley and Bodsworth (1983) concluded that excess loss of paint mist was due to imbalance between the supply and exhaust in the push–pull booth (input of 23.1 m^3/sec and exhaust of 9.4 m^3/sec). After a series of recommendations were put in place, including balancing the system, reducing air pressure, and converting to an electrostatic system, significant reductions were noted in the air concentration of paint mist, xylene, and white spirits.

Whitehead et al. (1984) conducted an extensive study of the control efficacy of paint spray booths in three companies with a total of seven plants. The companies used 34 paint spray booths with a normal face opening of 2 × 2.5 m and a mean face velocity of 0.55 m/sec (110 fpm) for conventional, airless, and high solids spray paint applications. The authors classed the paints as either low or high aromatic paints, although they did not indicate the basis for this classification. The study demonstrates the high performance of properly designed paint spray booths; in almost all cases the air concentrations were less than one-tenth the ACGIH TLV.

A simple hood evaluation technique used in Sweden requires that the inside of the booth be painted black. A strong flood light is then used for illumination during trial paint spraying. The spray is directed to the rear corners of the booth and the front edges are examined to evaluate loss at the front eddy positions. A Swedish company has also developed a paint spray hood with a canopy supply which offers improved protection for the painter (Ergonomi Design Gruppen AB, 1990).

Drying stations and baking ovens must be exhausted according to the appropriate fire codes. The choice of exhaust control on tumbling and roll applications depends on the surface area of the parts and the nature of the solvent.

15.4.4 Respiratory Protection

An evaluation of the effectiveness of respiratory protection in the paint spraying industry involving approximately 2600 painters revealed that the observed respirator protection factors determined by workplace sampling did not approach the commonly accepted protection factors owing to poor selection, inadequate training, and lack of maintenance (NIOSH, 1976).

In 1970 the Paintmakers Association in the United Kingdom found that if the concentration of toluene diisocyanate or HDI in a polyisocyanate paint system could be maintained below 0.7%, the paint could be applied by brush or roller without special precautions. However, if applied by spray, the conventional safeguards, including air line respirators, must be used (Pisaniello and Muriale, 1989).

In general, the minimum respirator for all paint applications should be a combination mist–organic vapor air-purifying device. Higher levels of protection, including air supplied hoods or helmets, may be necessary on certain paint systems such as the spray application of isocyanate-based paint. In airline systems, caution is required to ensure that the air supply meets minimum requirements; in a series of fatalities due to the use of inert gas supplies on air line equipment, 5 of the 11 fatalities were painters (Hudnall et al., 1993). The International Brotherhood of Painters and Allied Tradesman have developed an excellent decision logic to assist workers in the selection of the proper respiratory protective device (IBPAT, 1990).

REFERENCES

ACGIH (1992), *Industrial Ventilation, A Manual of Recommended Practice*, 21st ed., Committee on Industrial Ventilation, American Conference of Governmental Industrial Hygienists, Cincinnati, OH.

Ackley, M. W. (1980), *Am. Ind. Hyg. Assoc. J.*, **41**, 309–316.

AFP (1990), *Users Guide to Powder Coating*, Association for Finishing Processes of the Society of Manufacturing Engineers, Dearborn, MI.

Anon. (1985), *Chem Week*, April 24, 1985, 10–11.

ANSI (1985), *Safety Code for Design, Construction and Ventilation of Spray Finishing Operations*, ANSI Z9.3-1985, American National Standards Institute, New York.

Berger, H. L. (1988), *Mach. Des.*, July 21, 58–62.

Bjerrre, A. (1990), *Ann. Occup. Hyg.*, **33**, 509–517.

Bradley, A. and Bodsworth, P. L. (1983), Ann. Occup. Hyg., **27**, 223–224.

Bradshaw, S. (1990), HSE Contract Research Report No. 19/1990, Relative Hazards of Gaseous and Particulate Pollutants During Paint Spraying, Health and Safety Executive, United Kingdom.

Burgess, W. A., Ellenbecker, M., and Treitman, R. (1989), *Ventilation for Control of the Work Environment*, Wiley, New York.

Chan, T. L., D'Arcy, J. B., and Schreck, R. M. (1986), *Am. Ind. Hyg. Assoc. J.*, **47**, 411–417.

D'Arcy, J. B. and Chan, T. L. (1990), *Am. Ind. Hyg. Assoc. J.*, **51**, 132–138.

Ergonomi Design Gruppen AB, (1990), Sweden.

Hansen, M. K., Larsen, M., and Cohr, M. H. (1987), *Scand. J. Work Environ. Health*, **13**, 473-485.

Herrick, R. F. and Smith, T. J. (1988). *Scan. J. Work Environ. Health*, **14**, Suppl. 1, 31–32.

Hudnall, J. B., Suruda, A., and Campell, D. L. (1993), *Am. Ind. Hyg. Assoc. J.*, **54**, 32–35.

Hund, J. (1993), personal commmunication.

International Brotherhood of Painters and Allied Trades (1990), personal communication.

Jaycock, M. A. and Levin, L. (1984), *Ann. Occup. Hyg.*, **28**, 19–21.

Kurppa, K. and Husman, K. (1982), *Scand. J. Work Environ. Health*, **8**, 137–140.

Murphy, J., Ed. (1971), *Surface Preparation and Finishes for Metals*, McGraw-Hill, NY.

Myer, H. E., O'Block, S. T., and Dharmarajan, V. (1993), *Am. Ind. Hyg. Assoc. J.*, **54**, 663–670.

NIOSH (1976), *Performance Evaluation of Respiratory Protective Equipment Used in Spray Painting*, HEW (NIOSH) Publ. No. 76-177, National Institute for Occupational Safety and Health, Cincinnati, OH.

NIOSH (1981), *An Evaluation of Engineeering Control Measures for Spray Painting*, DHHS (NIOSH) Publ. No. 81-121, National Institute for Occupational Safety and Health, Cincinnati, OH.

NIOSH (1984), *Recommendations for Control of Occupational Safety and Health Hazards—Manufacture of Paint and Allied Coating Products*, DHHS (NIOSH) Publ. No. 84-115, National Institute for Occupational Safety and Health, Cincinnati, OH.

NIOSH (1990), Health Hazard Evaluation Report HETA 90-368-2137, Rockwell International, Newark, OH, National Institute for Occupational Safety and Health, Cincinnati, OH.

O'Brien, D. M. (1984), *Am. Ind. Hyg. Assoc. J.*, **45**, B 7–8.

O'Brien, D. M. and Hurley, D. E. (1982), *Am. Ind. Hyg. Assoc. J.*, **43**, 695–703.

Olsen, E. and Seedorff, L. (1990), *Ann. Occup. Hyg.*, **34**, 371–378.

Pisaniello, C. L. and Muriale, L. (1989), *Ann. Occup. Hyg.*, **33**, 563–572.

van der Wal, J. F. and Moerkerken, A. (1984), *Ann. Occup. Hyg.*, **28**, 39–47.

Whitehead, L. W., Ball, G. L., Fine, L. J. (1984), *Am. Ind. Hyg. Assoc. J.*, **45**, 767–772.

Winder, C. and Turner, P. J. (1992), *Ann. Occup. Hyg.*, **52**, 226–234.

PART SIX

CHEMICAL-BASED PRODUCTS

CHAPTER 16

Chemical Processing

16.1 INTRODUCTION

There are several thousand chemical processing plants in the United States employing over 200,000 technicians and engineers. The chemical processes used in these plants derive from the simple equipment and techniques of the student chemistry laboratory, differing only in size and complexity. The design of the production plant and the process equipment will vary greatly depending on whether it produces bulk chemicals, fine chemicals, or specialty products such as pharmaceuticals. At one end of the spectrum is a facility in which a company manufactures a household cleaner by diluting a purchased concentrate with an alcohol and adding an odorant. In a major chemical company the manufacturing history of a new product is far more complex. The research group is assigned the job of inventing, for example, a new antioxidant for rubber products. If the bench research leads to a new molecule with the desired features, a few grams are made for initial review. If the results are positive, the work is scaled up to pilot plant level for the manufacture of several kilograms to be used for the definition of chemical and physical properties, product performance, and initial toxicity studies. Successful completion of this phase may result in a decision to undertake full-scale production of the chemical. Manufacture may take place at a company plant using existing equipment or it may require the design and construction of a new facility. In either case the company must take certain initiatives, including the submission of a Pre-Manufacturing Notification (PMN) to the Environmental Protection Agency before the manufacture of the chemical for sale. The synthesis and purification of the new chemical may be assigned to an existing plant to be completed in a batch operation using open or semienclosed equipment, or if the market potential exists and the process chemistry permits, the work is done in a closed, continuous process in a highly automated plant.

It is beyond the scope of this brief review to identify the health issues faced by each of the many different types of chemical plants. However one industry, fine chemical manufacture, includes the principal operations and equipment common to all chemical processing. One such hypothetical plant, shown in Figure 16.1, designed for batch production of organic dyes with open or semienclosed processes, will be used to illustrate the basic concepts of exposure and control in this industry.

16.2 RAW MATERIALS

This plant requires procurement and on-site storage of 100 bulk chemicals in quantities from 100 to 100,000 kg. The materials are either granular or liquid ; general tank and warehouse storage is appropriate for most, but some highly reactive chemicals may require special environmental conditions and isolation in limited quantities.

16.2.1 Granular Materials and Powder

The volume of solids will range from catalysts used in small quantities to large volumes of polymers. The small-quantity materials will be shipped in appropriate drums or bags. Intermediate quantities of granular chemicals are effectively transported to the plant in bins or tote containers. Flexible tote containers of polypropylene textile are available for transport of up to 4000 lb of dry and semimoist chemical. Rigid aluminum and stainless steel bins are also available. An advantage of both the flexible and metal containers is that they are equipped with top-filling and bottom-dispensing fittings so that sealed connections can be made to minimize dust release during material transfer. Since the containers can be transported directly to a transfer point, such as a reactor charge port, the manual lifting and associated dust exposures in multiple drum dumping is eliminated. The supplier of the bulk chemical will also deliver preweighed quantities for a specific batch size, thereby eliminating dusty weighing procedures at the plant. If the bulk material is combustible, classed as dangerous, or water sensitive, the rigid bins can be hermetically sealed and, if needed, inerted with nitrogen.

The large-volume granular chemicals delivered to the plant by truck or rail are pneumatically conveyed to storage silos; if the process scale permits, the material is pneumatically conveyed to the process vessel. The anticipated material transport of bulk granular materials to process locations should be given early attention since handling costs will be reflected in a poor layout, and dust release to the workplace will be excessive and require elaborate local exhaust ventilation. In the more common batch process shown in Figure 16.1, using moderate quantities of granular chemical, the chemical is added manually to the vessel through a charging port or manway.

Quantities of granular material in the range of a few drums can be dumped directly into the reactor or mix vessel using a drum-dumping device, as shown in Figure 16.2. If the material is highly reactive or if the reactor environment cannot be opened to air, a charging lock is used (Figure 16.3).

Dumping the granular material into a reactor already charged with solvent induces air into the vessel, with the resulting displacement of particles and vapor-laden air back to the workplace. The charging port is therefore an important exposure point and must be controlled by local exhaust ventilation, as will be discussed later. In addition, there is a fire and explosion hazard originating from the static charge build up during dry solid and liquid flow into the reactor.

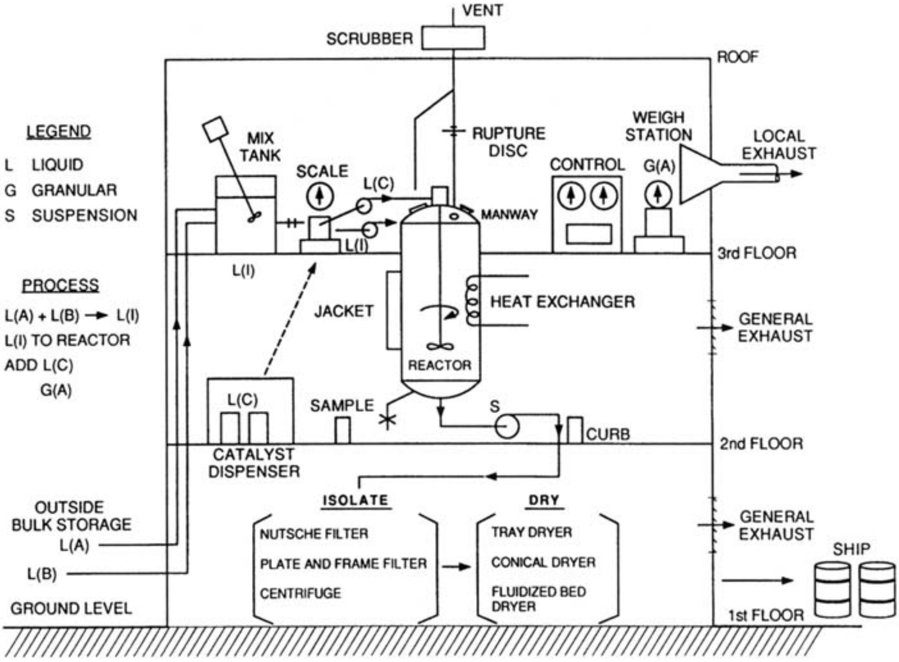

Figure 16.1 A fine chemical plant. Liquid A [L(A)] is mixed with liquid B [L(B)] in tank 104 to make liquid 1 [L(1)]. Liquid 1 is pumped to reactor A 682 and a liquid chemical C [L(C)] and a granular chemical A [G(A)] are added. The reactor is held at temperature and the contents are mixed while the reaction runs. Samples are taken periodically and when the reaction is complete the reactor contents are pumped to one of three separation units for isolation and subsequent drying.

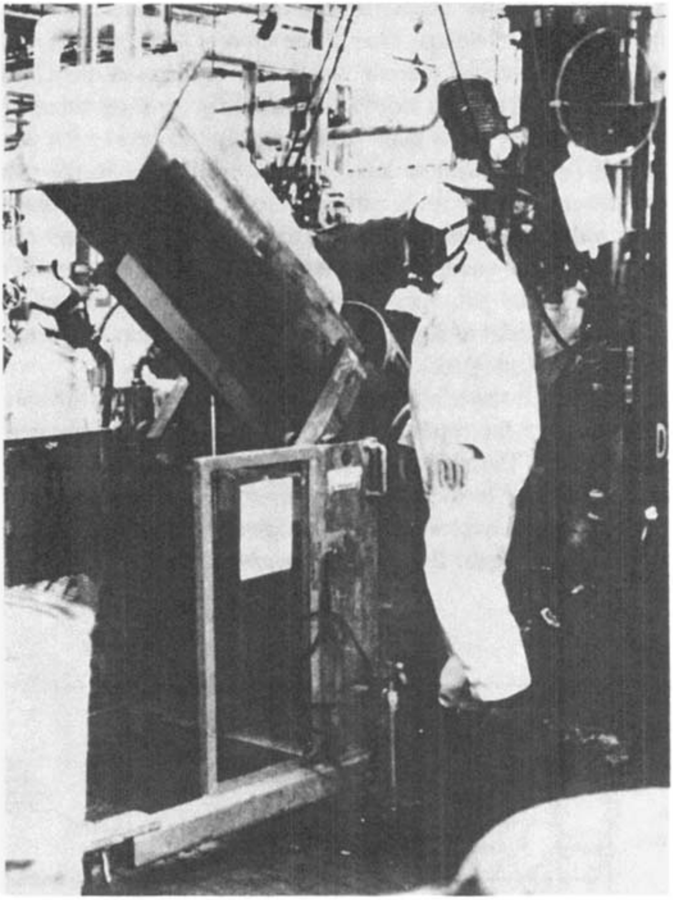

Figure 16.2 Drum dumping at reactor charging port.

16.2.2 Liquids

The fine chemical plant in Figure 16.1 uses a number of solvents including acetone, toluene, methylene chloride, isopropyl alcohol, and methyl cellosolve. The solvents are transported to the plant by rail or truck tanker and delivered by closed line to individual storage tanks, each holding 10,000 gal. The exposure of workers to chemical vapors at large dock receiving facililties has been evaluated in both the petrochemical and chemical processing industry and, although the operations are usually conducted in open air, exposure to vapors is high and control ventilation may be required. Closed circuit unloading is the best method to control exposure. The intermittent exposures at the facility in Figure 16.1 would not be significant and special controls are not required.

Both aboveground and underground storage tanks are encountered in chemical processing facilities. Underground storage tank regulations promulgated by EPA require a comprehensive management program including spill and overflow con-

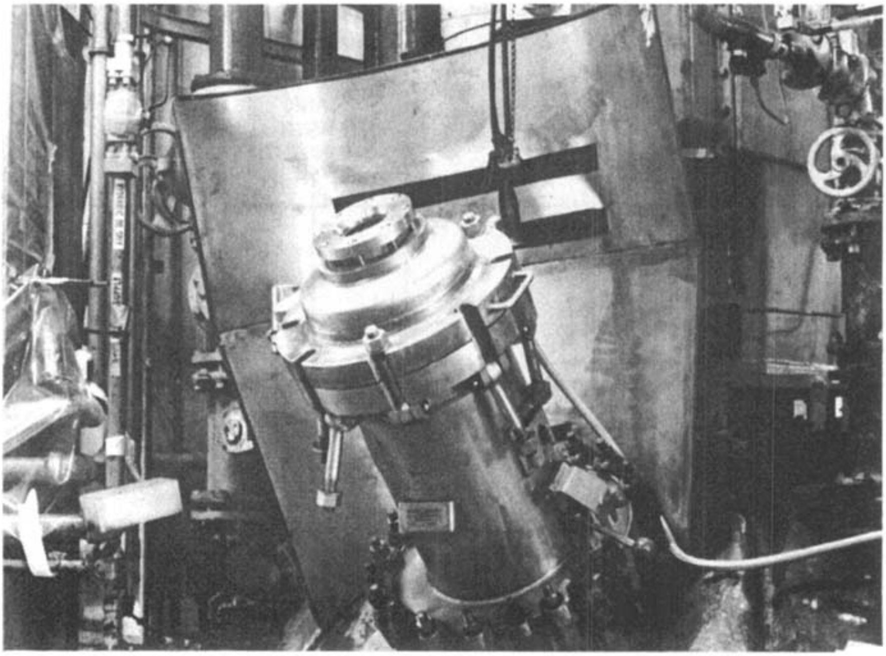

Figure 16.3 Charging lock at reactor charging station.

trols and leak detection equipment shown in Figure 16.4. Since the enactment of these federal regulations almost all new tank installations are above ground. The aboveground storage tanks offer many advantages. Of major importance is the ability to inspect the tank routinely and repair defects before a leak occurs. In addition, a double-walled aboveground storage tank is more economical to install than a comparable-sized underground storage tank and it can be moved if the plant layout is changed in the future. Four types of aboveground storage tank options are available: (1) a double-walled aboveground storage tank with built-in monitoring well, (2) a single-walled tank enclosed with 6 in. of concrete, (3) a single-walled tank in a dike, and (4) a single-walled tank in a concrete vault.

The quantity of solvents transported in and out of chemical processing sites has been dramatically reduced over the past decade owing to toxic use waste reduction efforts which has "designed-out" solvent use. When the solvent cannot be eliminated, the waste material is recovered for reuse. The impact of this approach was seen in one plant whose annual off-site transportation and disposal costs for isopropyl alcohol exceeded $100,000. The installation of a distillation tower to recover the contaminated alcohol was amortized in two years.

In the small-batch operation shown in Figure 16.1 with multiuse equipment, all solvents are transferred to every reactor using a piping manifold. Pipe lines are run from each storage tank to the production facility where they terminate in a manifold. If solvent is to be transferred from a storage tank to a specific reactor or mix tank, hard piping or a flexible line is made up to a fitting on the manifold and con-

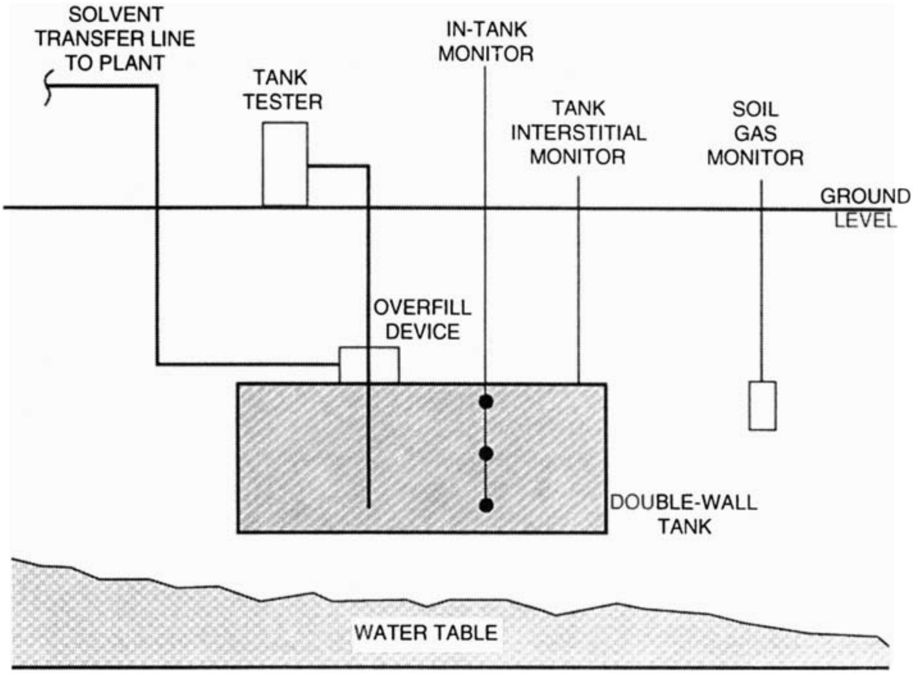

Figure 16.4 Underground storage tank with leak detection equipment. Source: Adapted from Metcalfe and Eddy (1994).

nected to the vessel. The solvent is then pumped into the vessel through a flow meter. If flexible hose is used to make this connection, spills will occur during line drainage, resulting in exposure to operating personnel. This problem is alleviated in a large, single-product facility by hard-piping directly from the storage tanks to the vessel. Leakage that occurs when lines are disconnected can be eliminated by first pressurizing the lines with nitrogen to drive the solvent either into the vessel or back to the storage tank.

If the batch process requires that liquid chemicals be introduced into the reactor at a specific point in the process, it can be done in several ways, depending on the volume, chemical properties, and toxicity of the material. Small quantities can be transferred by drum pump (Figure 16.5). This widely used pump has a simple configuration with a dip tube which is immersed in the drum and a direct-attached, motor pump which transfers fluids at the rate of 5–20 gpm. The worker is exposed to the vapor in the headspace of the drum and evaporation products from the wetted tube as it is removed from the drum. Control of this exposure can be achieved with a bung hole exhaust and a ventilated scabbard for the wand (Burgess et al., 1989).

If greater quantities are to be transferred from the drum or holding tank to the reactor, a wide range of pumps are available, including gear and double-diaphraghm pumps. In a batch operation, the pumps may be mounted on wheeled dollies so that they can be moved throughout the facility to serve temporary connections as described earlier. The pump is usually paired with a cartridge filter which must be changed routinely. This operation results in some spillage and exposure to the worker. Highly toxic or reactive fluids can be transferred to a reactor without worker exposure by connecting the chemical drum to a reactor fitting and "pulling" a vacuum on the reactor with a steam ejector to draw over the chemical.

16.3 FACILITY DESIGN

A building complex designed for chemicals production must provide on-site chemical storage and well-defined and preferably separate building locations for synthesis, separation, drying, packaging, and shipping. The facililty can be either a single- or multiple-story building; in either case the building must be designed for easy access by roof or wall sections to "drop in" major pieces of equipment. Various fire prevention and electrical codes must be observed which require explosion relief venting, minimum general and local exhaust ventilation, and explosion-rated electrical components. Flooring and drains must be designed for containment and treatment of all spills. Quick-acting floor drain blank-offs are available to ensure that spills do not enter the drains. Air and gas cleaning facilities must be available for the contaminant-laden process streams and local exhaust streams. The health and safety considerations for the design and construction of chemical processing facilities are myriad. A comprehensive checklist proposed by Bohl and Langer (1979) and shown in Appendix D is of value to the occupational health practitioner.

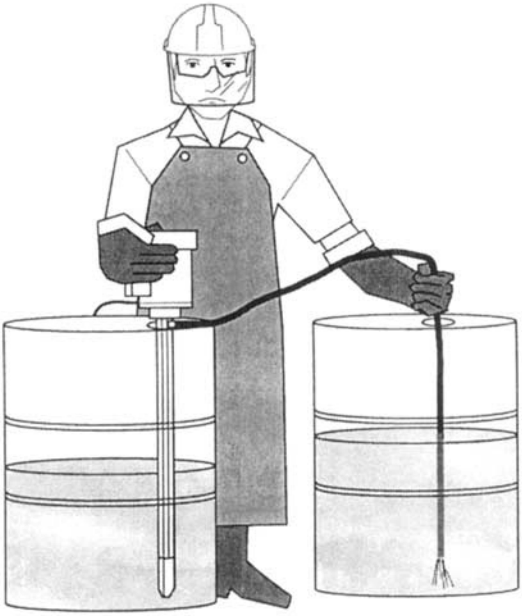

Figure 16.5 A drum pump. Operator is wearing chemical splash goggles and faceshield. Containers are electrically bonded.

16.4 MAJOR PROCESS EQUIPMENT

The benchtop organic synthesis equipment shown in Figure 16.6 is the prototype for the production facility. The reagents are added to a round-bottomed flask placed in a heating mantle. The flask is equipped with a thermometer and a magnetic stirrer. The reaction proceeds to completion while being monitored by the student. The solid reaction products are separated from the reaction fluid by pouring the fluid with the suspended solids through a filter paper supported in a Buchner funnel. The recovered material is then placed in a convection drying oven. The equipment in a chemical processing facility consists of the same components, although scaled up in both size and complexity, as described below.

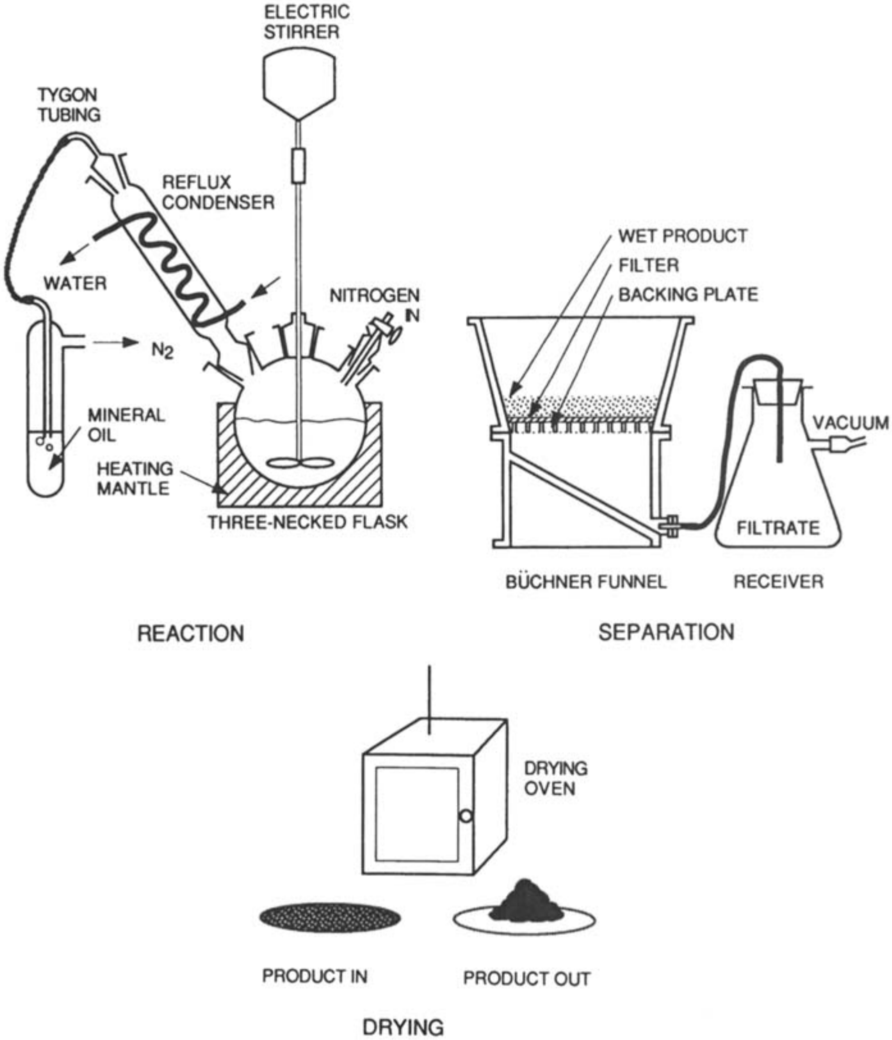

Figure 16.6 A bench-top chemistry teaching setup.

16.4.1 Reactor

The reactor in Figure 16.7, modelled after the round-bottomed flask in Figure 16.6, is the heart of the fine chemical facility. The reactor is a pressure-rated vessel (10–150 psig) with glass lining and ranges in size from a few gallons for pilot plant work to 10,000 gal for large-scale production. The major design features of the reactor can be divided into those necessary for production purposes and those installed for safety. The production features include the glass lining which ensures

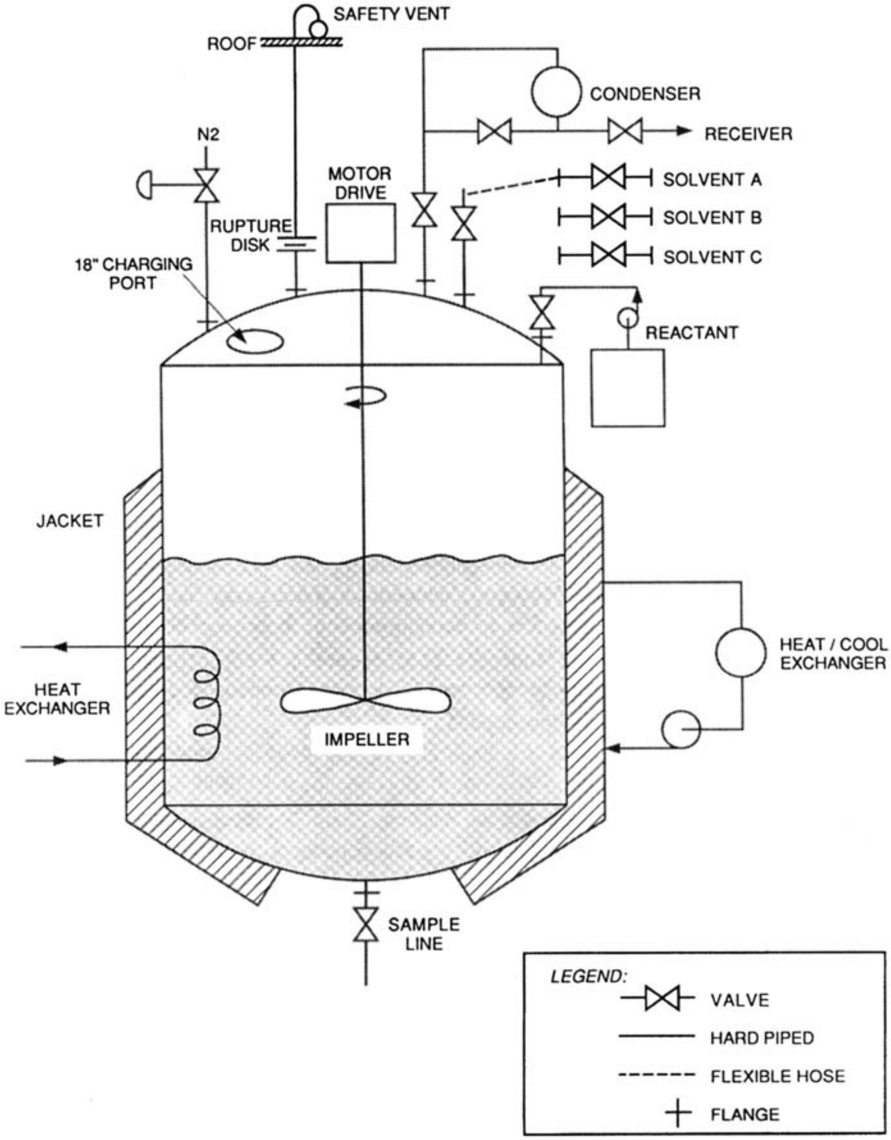

Figure 16.7 A reactor.

that trace metals from the reactor shell will not interfere with the reaction. The lining can be rigorously cleaned to prevent product cross-contamination between runs. The access ports on the reactor include a charge port (manway) designed primarily for charging or loading the vessel with granular chemical. The operator may also take samples from the reaction fluid through the manway and it is large enough to permit workers to enter the vessel for cleaning and inspection. A number of flanged pipe fittings are available to connect permanent or temporary transfer lines for pumping liquid into the reactor. As described earlier, these fittings can be used to connect the solvent manifold to the reactor. The suction leg from the steam ejector, installed on the top dome of the reactor, is used to strip off volatile materials or pull in liquid reagent. The reactor is equipped with a heat exchange jacket serviced with both cooling and heating fluids. This feature, combined with an internal heat exchange coil, allows the operator to achieve the optimum temperature for the reaction. The large reaction mass in the reactor is mixed with a top-mounted impeller driven by a large motor mounted on top of the reactor. A reflux condenser is mounted on the reactor dome with a final condenser for stripping off material.

Although reactor designs include the many safety features listed below, a number of serious accidents have occurred because of overpressure and rupture of reactors which allows the release of large quantities of toxic chemicals that cause death and serious environmental damage. The overall mechanical design identifies the reactor as a pressure vessel. The head and bottom of the vessel are dished, access port hatches are fastened with heavy J bolts, and all fittings are massive. In addition to the basic mechanical design to handle overpressure, the reactor is equipped with a pressure-relief system. A resin-impregnated graphite rupture disk is mounted in a large diameter pipe leading from the top of the vessel. Disks are available for burst pressures of 10–150 psig. Graphite is chosen as the construction material since it is non-fatiguing, corrrosion-resistant, and can be machined to provide burst pressures within 5% of rated pressure. This performance and reliability cannot be achieved with a metal disk or a conventional pressure-relief valve. The vent stack from the rupture disk should be connected to a containment tank and air cleaner, as shown in Figure 16.1.

For fire protection purposes it is common practice to inert the headspace of the reactor with nitrogen or carbon dioxide at flow rates of 10–30 lpm. Rigorous confined-space entry procedures must be followed when entering spaces that have been inerted. The availability of piped inert gases throughout the plant has serious implications. A number of deaths have occurred in other industries when airline respirators have been inadvertently connected to such inert gas supply lines (Hudnall et al., 1993). Although identified earlier as a production feature, the heat exchange jacket on the reactor fulfills an important safety function since it is used to control reaction exotherms that might result in overpressure and release of the contents of the reactor. As noted earlier, the manway or charge port positioned at the top front section of the reactor is opened to load or "charge" bulk chemicals. The dumping of granular material into the reactor induces air to flow into the reactor with the resulting displacement of particles and vapor-laden air into the workplace (Burgess et al., 1989). The primary control of this air contaminant is achieved by charge port ventilation, as shown in Figure 16.8. This exterior hood requires flow rates of 1,000–12,000 cfm to achieve collection efficiencies in excess of 90%.

If small quantities of toxic or reactive liquid chemicals are to be added to the reactor during processing, it is best done in a closed system. Drummed material is positioned close to the reactor on the main floor or in an ancillary exhaust booth. In both cases the chemical can be pumped to the reactor or pulled over by vacuum.

Periodically, samples must be taken of the reactor contents to check on the status of the reaction or as a final product quality check. This is frequently done by opening the charge port on the top of the reactor and using a dipstick with a sampling cup. Although there is potential exposure from the headspace contaminants in the reactor and the vapor from the sample, exposures are minimal when the reactor is equipped with charge port ventilation. Headspace exposure during sampling can also be controlled by placing the reactor under vacuum with the steam ejector. This action causes an inward flow of air through the charge port, thereby minimizing worker exposure. A second sampling technique involves the use of a special sampling loop positioned at the bottom of the reactor. This sampling location should be equipped with a small exhausted enclosure (ACGIH, 1992).

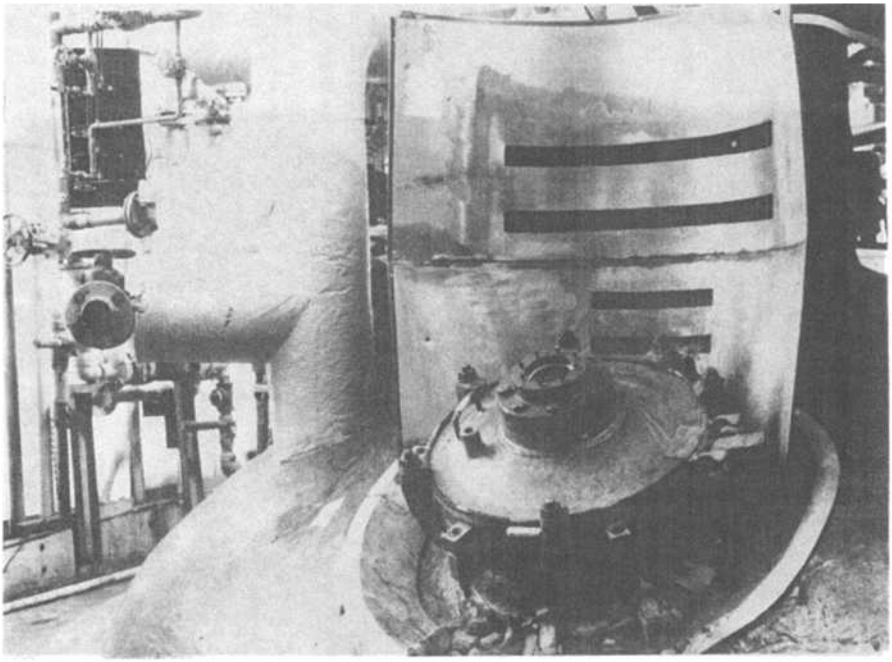

Figure 16.8 Charge port ventilation.

16.4.2 Liquid–Solid Separation

The reaction product to be isolated is the solid dye suspension formed in the reaction. In batch operations this separation frequently represents the principal exposure point in the process since it is done in an open system with an opportunity for close contact with the chemicals. The three common separation techniques are the nutsche, plate and frame filter press, and centrifuge.

16.4.2.1 Nutsche. In the chemistry laboratory setup the synthesized crystal was isolated with a filter paper supported in a Buchner funnel. The gravity nutsche is the production version of this technique (Figure 16.9). Nutsches, available in a range of sizes in round or box configuration, are constructed of stainless steel or rigid plastic. The geometry is simple, providing a filter media mounting support and a bottom drain fitting for removal of the filtrate. The reactor contents are discharged to the nutsche in batches and filtered by gravity or with vacuum or pressure assist. The particles are collected on the filter media and the filtrate or mother liquor is pumped to a holding tank for recovery and reuse. This filtration process is completed on the plant floor and presents a large wetted surface area for evaporation of carrier solvents. If uncontrolled, the operation will result in high concentrations of solvent vapor. The most effective control is local exhaust ventilation with an enclosing hood (Woolrich, 1984). The worker exposures, however, may still be high during product recovery. The conventional nutsche is a relatively slow operation with 30–40% solids in the collected product usually achieved.

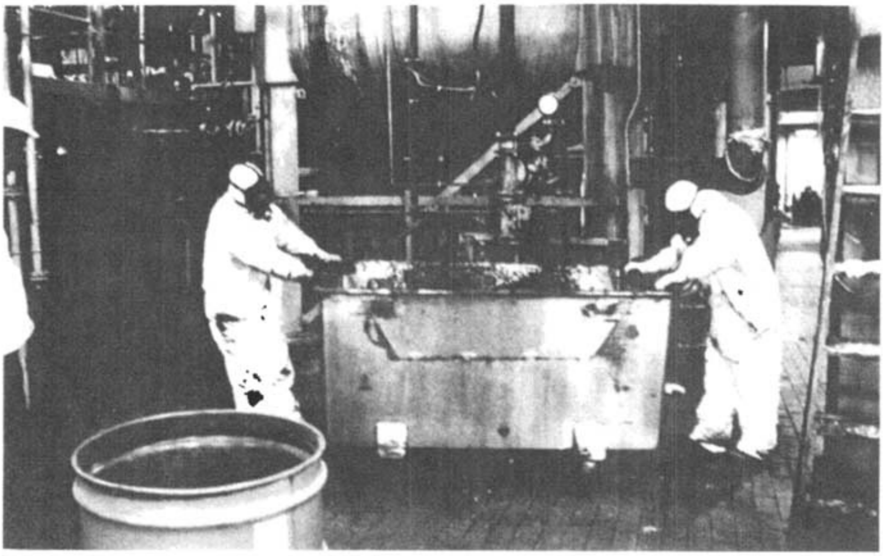

Figure 16.9 A box nutsche.

16.4.2.2 Plate and Frame Filter Press. The application of the simple filter media for separation of product can be extended in many ways. The available techniques include belt, leaf, and cartridge filters and the plate and frame filter press. The plate and frame is probably the most widely used separation technique in the chemical industry, with relatively high capacity and the ability to provide a product cake in the 40–50% solids range. The initial equipment cost is low; however, the operation is labor intensive. In the equipment design shown in Figure 16.10, a series of polypropylene support plates with recessed channels are arranged in a parallel configuration, usually with separating plates to retain the solids. The synthetic fibrous filter media is placed over the support plates with solid–liquid separation occurring at the face of the filter. Commonly the plate and frame filter press contains 10–30 plates, presenting a total filtration area of 1–100 m^2 (11–1080 ft^2). After the filters are positioned, a hydraulic ram compresses the plates to obtain an interplate seal. The feed slurry is then pumped from the reactor to the plate and frame filter press under pressures up to 250 psig. A cake 1/2–2 in. thick is built up, and monitored by the system pressure drop. The filtrate from the plate and frame filter press is delivered to a storage tank for recovery. At a given cake buildup, the feed from the reactor is stopped and the cake is usually washed in place with a solvent. At the completion of washing, the plate sealing pressure is released and the plates are separated (Figure 16.11) either manually or semiautomatically. The solvent–wet cake is scraped from the filter by the operator, using a plastic spade, and drops into a bin. The air concentrations of solvent vapor are high at this point, owing to the large surface area of the solvent–wet cake and the confined working

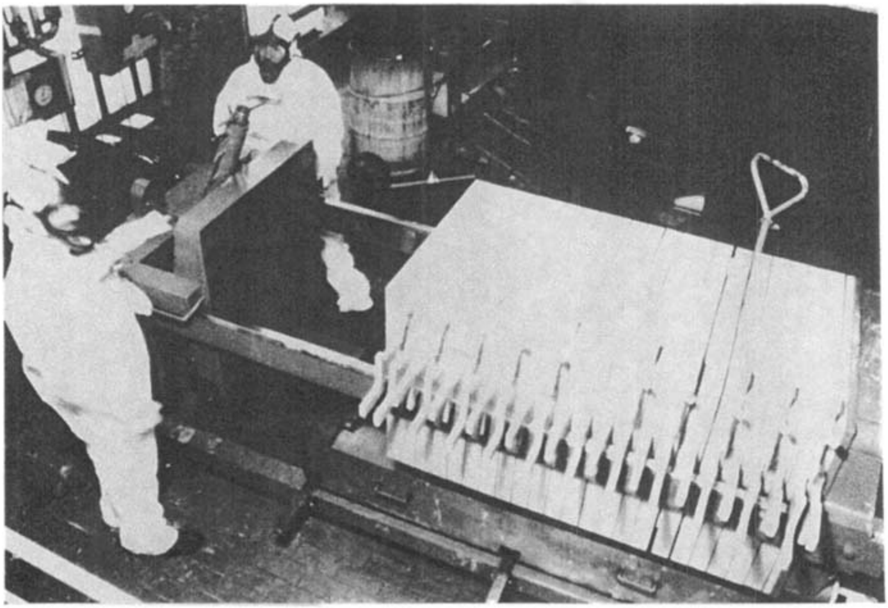

Figure 16.10 A plate and frame pressure filter.

space between plates. This condition is further complicated by the extended time period required for cake removal.

Control of airborne chemical vapors on the plate and frame filter press is difficult to achieve. In certain plants this operation can be automated, thereby minimizing worker exposure. However, in most cases the product cake must be removed manually, as shown in Figure 16.11. The entire plate and frame filter press can be enclosed with rigid sliding panels or flexible plastic screens and the enclosure exhausted to ensure inflow through the principal work location. (Woolrich, 1984; Burgess et al., 1989). This approach minimizes general plant contamination; however, the operator working between the two plates is not protected. In such a situation the worker must be provided with high-quality respiratory protection such as a full-face air-purifying respirator or an air–line respirator.

Occasionally it is possible to strip the carrier solvent from the cake before the plates are opened for cake removal. In this scenario, if toluene were the carrier solvent, the cake would be washed in place with an alcohol that strips the toluene from the cake. The alcohol is then stripped by washing with water. The procedure requires that the product not be degraded by water. If this can be accomplished, the worker is faced with a water-wet product cake when it is stripped from the filter.

16.4.2.3 Centrifuge. The basket centrifuge is a technique for liquid–solid separation in the 60–65% solids range. These devices, as large as 4 ft in diameter and operating at speeds up to 2000 rpm (Figure 16.12), can be operated in a batch or semicontinuous mode with automatic plowdown and product discharge. The per-

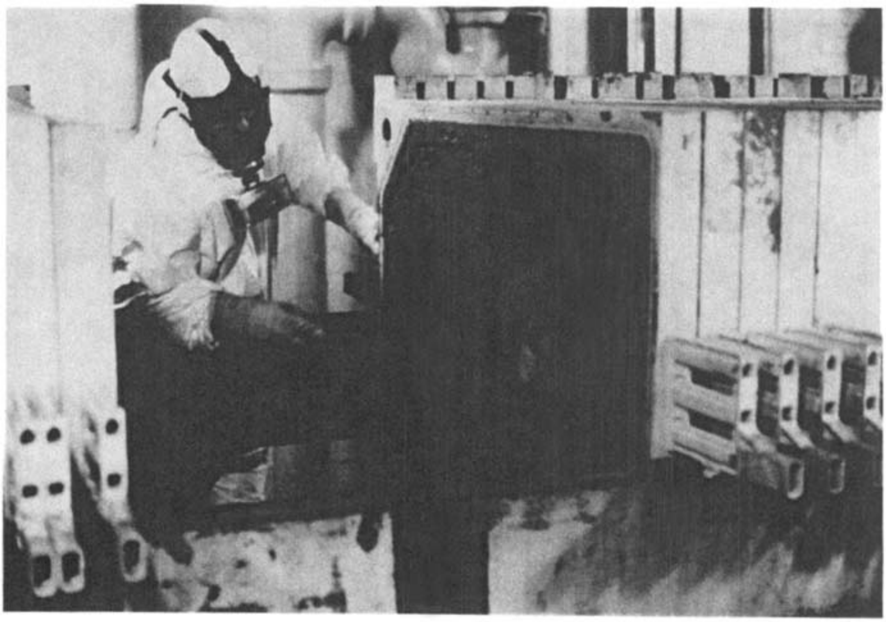

Figure 16.11 Scraping plates of plate and frame pressure filter.

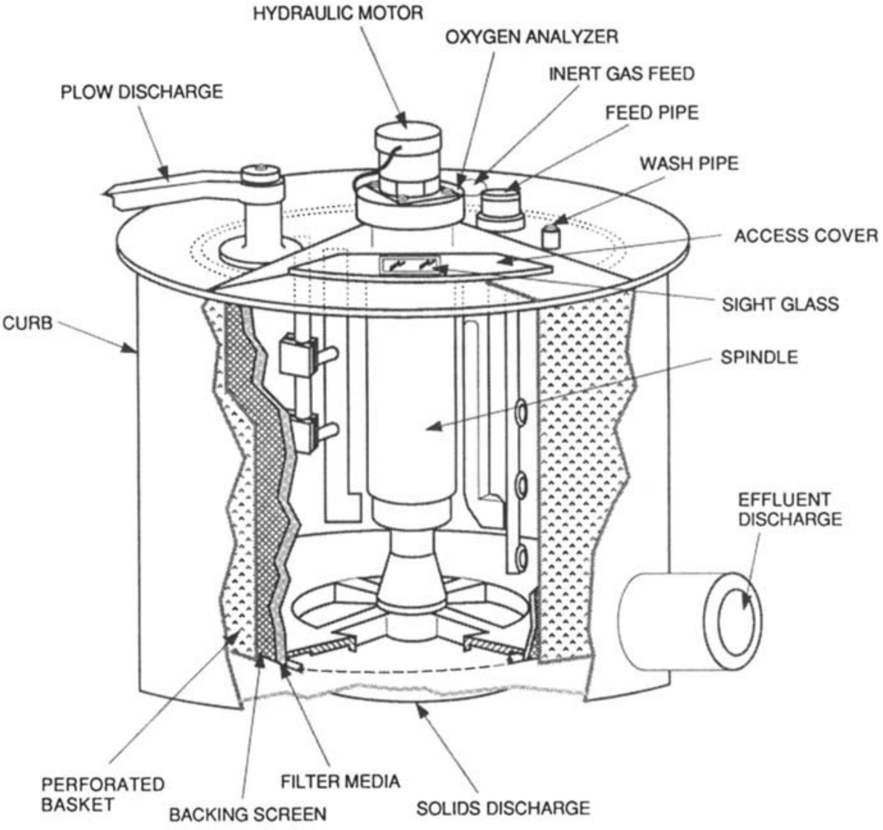

Figure 16.12 A centrifuge.

forated basket is lined with a support or backing screen on which a synthetic fabric filter is placed. The feed liquor flows from the reactor to the centrifuge fill pipe and is sprayed on the inside surface of the basket. The particles are collected on the filter face; the filtrate flows to the base of the shell (curb) of the centrifuge and is pumped to a holding tank for treatment and reuse. When a suitable cake is built up on the basket, the feed from the reactor is slowed and the cake is removed with a plow or peeler knife. This technique will remove up to 90% of the product cake and the balance must be removed manually. The hinged access cover on the top of the centrifuge is raised and the operator leans into the centrifuge to scrape off the balance of the cake with a plastic spade. This work results in exposures to high concentrations of the vehicle or solvent since the vapor concentrations inside the centrifuge quickly reach saturation.

There are a number of control options available to minimize this exposure. Before plowing, the cake can be washed with a less toxic material, or one with a lower vapor pressure. If it is acceptable from a production standpoint, and does not present a fire and explosion problem, the filtrate discharge line can be adapted to pull air through the open access cover to the exhaust system. The inflow of air through the access cover will minimize the worker's exposure. A third approach is the installation of two winged slotted exhaust hoods at the open cover. The last and probably most effective control is to provide a glove-port system, as shown in Figure 16.13. During active centrifuging the gloves and scraper are mounted inside the centrifuge housing; they are deployed when the centrifuge is stopped and the access cover is opened.

The operation of the centrifuge with a feed liquor which contains material that present a risk of fire and explosion requires special controls. If a material such as toluene is used, which presents a static charge problem in bulk transfer, a number of standard procedures are followed in the plant, including inerting the centrifuge with nitrogen or carbon dioxide. This effective control presents a risk of asphyxiation if the operator puts his head in the inert atmosphere during spading or inspection.

16.4.3 Drying and Packaging

The filtration techniques described above provide a cake that contains 30–70% solvent. If the isolated material is the final product, it is dried for packaging and shipping. If the material is an intermediate and is the starting material for the next synthesis step, it may or may not require drying. Several drying processes are widely used in chemical processing. The choice of process depends primarily on production requirements, although the chemistry of the compound may present limitations on the candidate techniques. For example, if the product degrades at moderate temperatures, a number of high-temperature drying techniques must be excluded. Although both batch and continuous drying processes are available, the emphasis in this discussion will continue to be on batch operations since they represent the greatest potential risk for exposure. One general rule regarding exposure applies

Figure 16.13 Glove-port system on centrifuge. Operator is wearing chemical splash goggles.

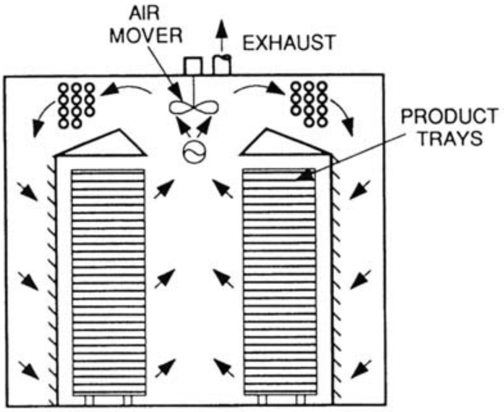

Figure 16.14 A vacuum box dryer.

to all drying operations. The transfer of the wet cake from the separation device to the dryer presents the potential for exposure to solvent vapor, while the unloading of the dryer and packaging of the product presents a dust exposure.

The most widely used drying technique is the tray dryer in the form of a straight convection dryer or a vacuum oven dryer (Figure 16.14). This process is labor intensive and involves intimate contact with the product. The loading of the wet cake on trays and the removal of the dry product is difficult without significant exposure of the chemical processor to both solvent vapor and respirable dust. The basic rules governing the transfer of dry powders at well-designed workstations were proposed by Hammond (1980). The installation of local exhaust ventilation at the tray loading–unloading station is usually a necessary control measure.

Another common drying technique is the double-walled conical dryer (Figure 16.15). In this device, drying is accelerated by tumbling the product in a wall-heated cone while pulling a vacuum on the chamber to strip off the solvent. The concentration of the solvent in the effluent stream is high and necessitates air cleaning. The charging station can be controlled with local exhaust ventilation; the packaging of the dried material is again a difficult problem, although a dust-tight loading chute may be possible.

Fluidized beds provide a high-quality drying technique when applied to fine chemicals and pharmaceuticals (Figure 16.16). A heated air or gas stream lifts the material from the support and the volatile vehicle is stripped off. The geometry of the system lends itself to effective drumming without loss of dusty product to the workplace.

A number of other drying techniques, including spray and flash drying, are widely used in the industry for continuous, high-volume operations.

16.4.4 Transport

A review of the operations discussed above indicates the need for transport of raw materials, by-products, products, waste streams, intermediates, and ancillary/service fluids. These materials may be liquids, syrups, pastes, powders, granules,

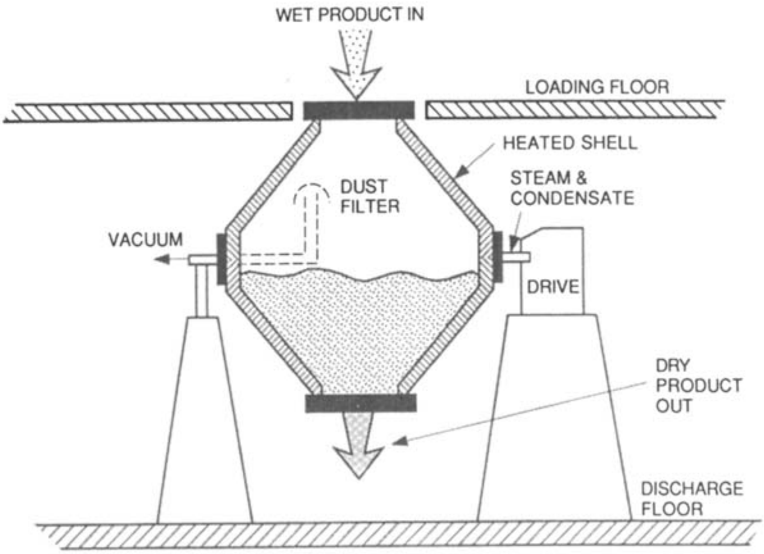

Figure 16.15 A conical dryer.

and encapsulated chemicals. If possible, all transfer should be by permanent, hard-piped lines to minimize exposure potential. However, the batch operations encountered in many chemical processing operations do not permit dedicated lines. Therefore, each time a temporary flexible line is set up, the possibility exists for leakage and worker exposure.

A second important source of contaminant is fugitive losses from pipe flanges, pump seals, agitator seals, valve stem seals, and process instrument lines. This leakage may seem trivial when an individual piece of equipment is considered, but studies of such fugitive losses in the chemical processing and petroleum industry indicate that it is a major air pollution problem and may be a worker exposure issue. A program should be implemented to identify and control losses (Lipton and Linch, 1987). High-pressure leaks from flanges and other fittings on pipe lines carrying corrosive and toxic liquids may result in serious accidents. Although the primary control is through maintenance, the use of piping connection control shields is prudent. The shields are treated synthetic textile jackets that cover the fitting and dissipate a pressure stream originating at the leak.

16.4.5 Work Practice

As indicated in Section 16.1, the manufacture of the chemicals may be a one-step process requiring the mixing of two chemicals to effect a simple reaction or it may involve multiple reactions with the isolation of several intermediates. Such a complex synthesis may require several dozen individual steps and require a month to complete; the cost of the product may be as high as $10,000 per kilogram. It is obvious that sophisticated chemical syntheses must be conducted in a precise way to optimize yield and ensure that the batch is not lost. At the per kilogram cost cited

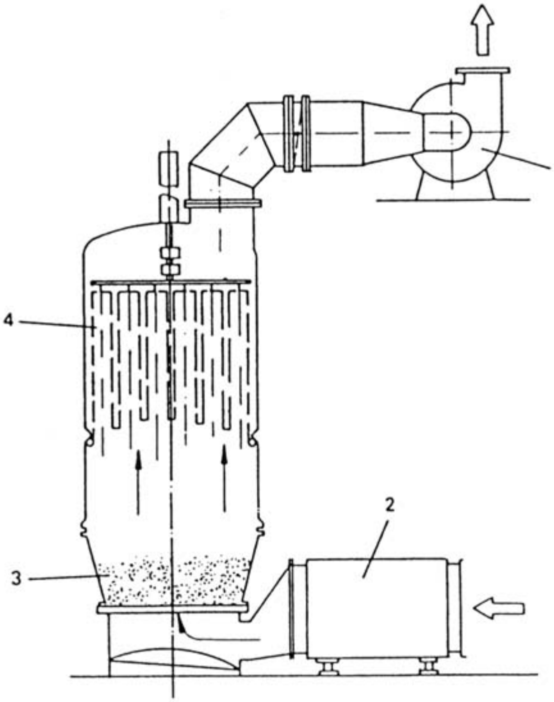

Figure 16.16 A fluidized bed dryer. Drying air is pulled through the system by means of a high static blower (1). The air is filtered, dried, and heated in a conditioning unit (2), passes upward through the product container (3) fluidizing the solvent wet material and stripping the volatiles. The vapor-laden stream is filtered (4) and vapor is removed before the air is exhausted to the atmosphere

for a product requiring an involved synthesis, the loss of a batch toward the end of the procedure could easily reach one-half million dollars. For these reasons, in addition to the potential for major accidents involving workers, the neighborhood, and property, all operations must be conducted under carefully developed procedures. These detailed operating procedures include the chemical stock list, the process equipment and operating conditions, specific health and safety precautions, and personal protective equipment. The identification of potential hazards that may arise from impurities in materials, exotherms that may occur, and the generation of toxic by-products, must also be an integral part of this process instruction (Burgess, 1994).

16.5 WORKPLACE EXPOSURE INFORMATION

Limited data are available on workers' exposure to air contaminants in batch chemical operations. The air concentrations noted during charging, sampling, filtering, drying, and packaging operations vary widely between synthesis steps and even between identical batches. It would be extremely helpful if a chemical exposure data bank were available for this industry. The EPA working group (EPA, 1986) recommended

TABLE 16.1 Job Exposure Profile

Degree 1
Minor exposure. Operations conducted in closed processing systems or carried out in a laboratory hood.
Degree 2
Moderate exposure. Operations conducted in open systems usually provided with local exhaust ventilation.
Degree 3
Major exposure. Operations conducted without local exhaust ventilation or activities such as cleaning, maintenance, and repair.

Source: Holzner et al. (1993). Reprinted with permission of American Industrial Hygiene Association.

that NIOSH and OSHA undertake a joint effort to establish ranges of contaminant air concentrations for each unit operation under various control configurations. This initiative has not been undertaken, nor has a second recommendation that workplace dispersion modelling be developed to permit estimation of worker exposure.

One company has developed a job exposure profile which compiles estimated exposures to each chemical and physical agent, based on job class, at a specific work site (Holzner et al., 1993). The estimation of exposure is a difficult element to generate. The company wisely chose to rank degree of exposure in three categories, based on the task or operation and its potential for exposure (Table 16.1). A second key element in establishing a job exposure profile is the duration of exposure; individual work elements in batch operations vary from a few minutes to one-half shift. Most of the specific work tasks, and therefore frequency of exposures, are less than 10 min; however some of the filtration tasks are 1 hr to half-shift operations, depending on the batch size. Identifying the type and level of exposure for a wide range of chemicals is certainly an arduous task and, in some instances, is impossible with current sampling techniques. If done rigorously, the exposure profile may be represented by a low concentration of solvent vapor (fraction of a ppm) from fugitive leaks with an occasional significant spike during a specific operation.

16.6 CONTROL APPROACHES

16.6.1 Containment

One of the principal factors defining the potential for exposure in chemical operations is the degee of containment afforded by the plant design. This issue was clearly identified in a workshop devoted to the prediction of workplace exposure to new chemicals processed under the the PMN (EPA, 1986):

> The degree of containment of a process facility was suggested as the basis for predicting worker exposure when controls are used. Standard control measures may often be categorized for each process: a sealed and isolated system where airborne contaminant levels are very low (ppb range for vapors); a substantially closed system where airborne contaminant levels are still relatively low (fraction of ppm or low ppm range for vapors); a semi-closed system which is typical of non-dedicated equipment used in job shop chemical processing facilities; and an open system.

The approach used by Holzner et al. (1993) to develop the job exposure profile mentioned earlier involves an estimate of potential for exposure which reflects the type of operation in which the chemical is used. The simple numerical code below reinforces the importance of containment. The specific tasks assigned to each category are shown in Table 16.1.

The correctness of the containment approach certainly seems obvious to the occupational health practitioner who has experience in this industry. However, open processes are frequently necessary for separation and isolation of final product and intermediates. In addition to presenting an opportunity for exposure, these batch operations are time consuming and costly. A recent example of conversion from open batch operations to a closed system in a specialty chemical company confirms the virtues of containment. In the original plant the separation process was conducted using plate and frame and centrifuge equipment. Although local exhaust ventilation was applied to the equipment, exposures to the carrier solvents continued to exceed the exposure guidelines and respiratory protective equipment was mandatory. In a radical departure from this series of batch operations, a new device integrating several of the batch processes in a single vessel was introduced. As shown in Figure 16.17, the suspension from the reactor is fed to the integrated filter–dryer by closed piping. The slurry from the reactor material is smoothed to permit pressure filtration (up to 1.6 bar) of the suspension through a fine, interchangeable stainless screen whose pore size can be chosen for a given product or intermediate. After filtration, the wet cake residing on the screen can be washed and reslurried for transfer back to a reactor or mix tank for subsequent processing. If the cake is the final product, heated nitrogen can be used for convection drying

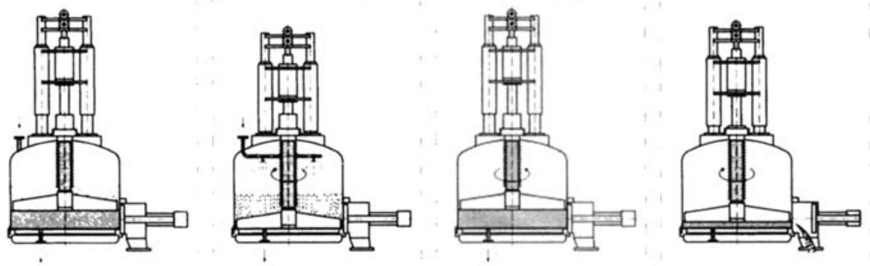

Charging and filtration: vacuum or presure

Washing: reslurry or displacement

Smoothing and compressing

Discharging

Figure 16.17 A filter-dryer. Source: Courtesy of Rosenmund, Inc., Charlotte, NC, Rosenmund Filter-Dryer®.

of the product or hot nitrogen can flow upward from below the screen, fluidizing the bed and drying the product. These drying techniques achieve residual solvent concentrations in the product as low as 1% without transfer of the product from the filter–dryer. The final product can be discharged by either central or side ports for closed-system packaging.

The flexibility of the filter–dryer permits it to complement the basic reactor for distillation, extraction, and crystallization processes. The technique improves utilization of process equipment, reduces the number of interequipment transfers, and thereby greatly reduces the potential for worker exposure and environmental releases. Both production and health and safety improvements are joined in this change from open-batch processes to the multifunctional filter–dryer. The work is completed in a closed system without exposure. Sequential isolation of intermediates is not necessary, and time-consuming step processing through separation and drying is eliminated.

16.6.2 Exhaust Ventilation

Although the use of closed systems as a primary control is certainly desirable, the fact remains that for many reasons, including equipment cost, this approach is not available to all facilities and semienclosed operations using batch techniques will continue to be common. In this case, control is based on a range of local exhaust ventilation techniques, as shown in Figure 16.18. In each of the conventional approaches, specific design data are available from several sources (ACGIH, 1992; Woolrich, 1984; Burgess et al., 1989). Although the approaches outlined in Figure 16.18 are widely used, there are few published data documenting their effectiveness.

16.6.3 Personal Protective Equipment

The designer of a respiratory protection program for a chemical processing plant of the type described in this chapter is faced with a difficult task. First, a large number of chemicals are in use. The principal exposure will be to carrier solvent vapors and the volatile or dusty chemicals encountered in open or semienclosed operations such as separation, drying, and packaging. The concentrations will vary widely, ranging from one-tenth the exposure guideline to 10 times the guideline, usually for very short periods of time.

If plant operations warrant the use of respirators, the lowest level of protection used should be a full-face, air-purifying respirator with chin canister for particles, acid gases, and organic vapors. The full facepiece is appropriate since it provides splash and eye protection in addition to affording a reasonable face seal. The multisorbent chin canister is recommended since several air contaminants may be present. In practice it is difficult to stock and effectively utilize a number of different cartridges or canisters. Since exposures are usually brief, the service life of the chin canister will be acceptable, and it is reasonable in size and weight.

In those operations where the full facepiece, air-purifying respirator is not acceptable, due to the nature of the chemical(s) and/or their concentration, an airline

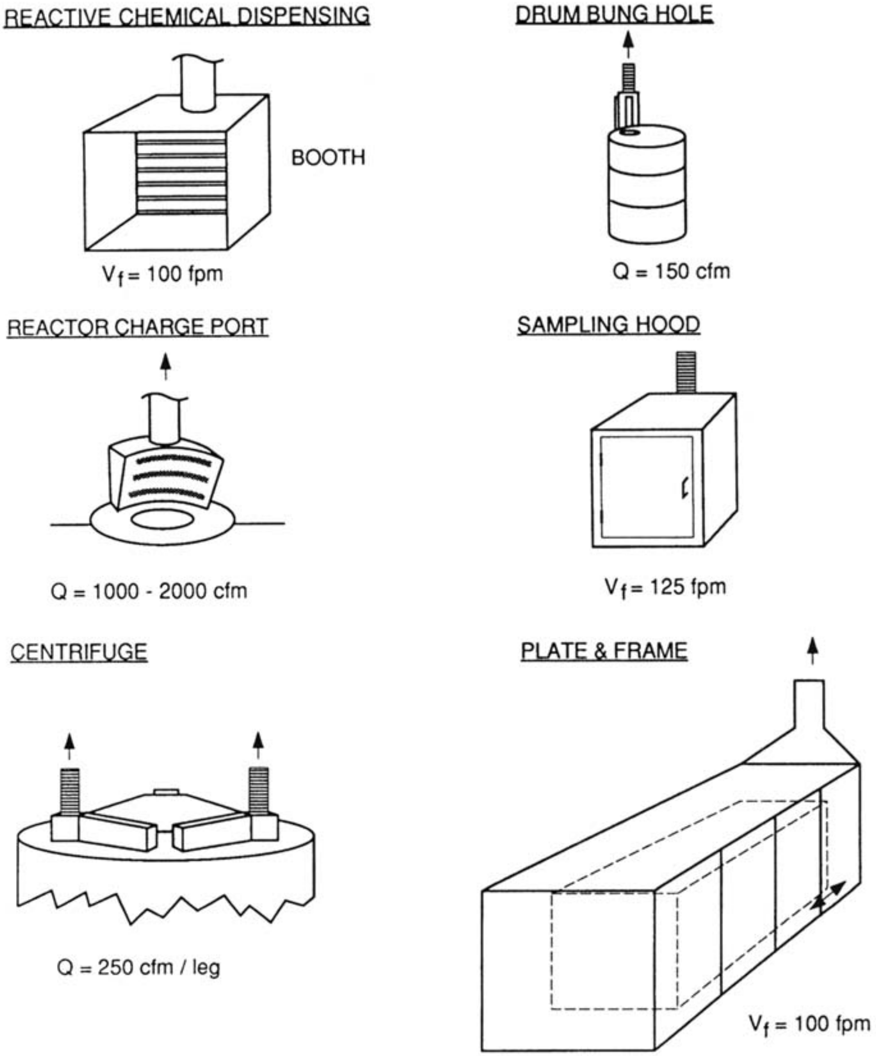

Figure 16.18 Ventilation details.

respirator should be considered. This equipment may be appropriate at the reactor charge station and on plate and frame operations where the work area is well defined and air concentrations are high. The normal restrictions on the application of airline equipment must be observed. Although self-contained breathing apparatus is occasionally encountered in routine use, owing to its bulk and weight it is usually only appropriate for emergency and certain maintenance operations.

The choice of protective clothing is also difficult to specify because of the range of chemicals in use. The availability of selection data based on standardized testing does permit rational selection. Disposable work garments, based on coated, nonwoven fabric, have been widely accepted by the chemical industry. Glove and clothing selection has been enhanced by the availability of permeation data and the introduction of new materials (Schwope et al., 1987). The choice of clothing should also be based on static electricity control where it is a major factor in the fire protection program.

Although the primary operations discussed earlier do not appear to present a noise hazard, the chemical plant is noisy and many facilities require a hearing conservation program. The source of noise is both from primary processing equipment such as the motor drive on the reactor impeller and the ancillary equipment, including pumps, air-driven equipment, and cooling fans.

REFERENCES

ACGIH (1992), *Industrial Ventilation, A Manual of Recommended Practice*, 22nd ed., Committee on Industrial Ventilation, American Conference of Governmental Industrial Hygienists, Cincinnati, OH.

Bohl, R. W. and Langer, R. R. (1979), personal communication.

Burgess, W. A. (1994), "Philosophy of Management of Engineering Control," in *Patty's Industrial Hygiene and Toxicology*, Vol. III, Part A, 3rd ed., R. L. Harris, L. J. Cralley, and L. V. Cralley, Eds., Wiley, New York.

Burgess, W. A., Ellenbecker, M. J., and Treitman, R. J. (1989), *Ventilation for Control of the Work Environment*, Wiley, New York.

EPA (1986), *Appl. Ind. Hyg.*, **1**, R11–13.

Hammond, C. M. (1980), *Ann. Occup. Hyg.*, **23**(1), 95–109.

Holzner, C. L., Hirsh, R. B., and Perper, J. B. (1993), *Am. Ind. Assoc. J.*, **54**, 15–21.

Hudnall, J. B., Suruda, A., and Campbell, D. A. (1993), *Am. Ind. Hyg. Assoc. J.*, **54**, 32–35.

Lipton, J. and Linch, J. (1987), *Health Hazards Control in the Chemical Industry*, Wiley, New York.

Metcalfe and Eddy (1994): *Underground Storage Tanks, Technical Bulletin for Industry*, New York, NY.

Schwope, A. D., Costas, P. P., Jackson, J. O., and Weitzman, D. J. (1987). *Guidelines for the Selection of Chemical Protective Clothing*, 3rd ed., American Conference of Governmental Industrial Hygienists, Cincinnati, OH.

Woolrich, P. F. (1984), in *Industrial Hygiene Aspects of Plant Operations*, Vol. 2, L. J. Cralley, and L. V. Cralley, Eds., Macmillan, New York.

CHAPTER 17

Petroleum Refineries

17.1 INTRODUCTION

According to NIOSH (1983), the United States has 285 refineries employing 70,000 workers. These refineries process a variety of petroleum products with low flash points; thus the principal hazards at refineries are fire and explosion. All operations are designed to prevent such catastrophes; nevertheless, serious refinery fires do occur. Processing units in the refinery are sealed and isolated systems with normal airborne contaminant concentrations ranging from the ppb range to the fraction of ppm. The facilities are highly automated with extensive process controls monitored remotely by operators working in control rooms. The greatest potential for exposure during normal operation occurs when operating personnel walk the unit to collect samples of process streams. The most significant exposures occur sampling streams rich in formate containing high concentrations of benzene.

The maintenance workers in the refinery have a much greater potential for significant exposure to airborne contaminants, noise, and heat than the operators. Maintenance operations includes repair of thermal insulation including asbestos, draining lines, blanking-off system components, and "pulling" pumps and other system components for repair.

The major exposures to both refinery personnel and outside contractors occur during turnarounds when complete refinery units are shut down and literally taken apart and put back together in a matter of days. Turnarounds involve a range of operations including abrasive blasting, welding, metalizing, and painting. Frequently the work must be done in confined spaces which have been inerted. The author has monitored one turnaround of a major refinery unit and is convinced that it is the most challenging industrial hygiene operation faced in modern history.

17.2 REFINERY PROCESSES

One must review the basic processes to understand the nature of the potential health hazards in refineries. A modern refinery is a complex arrangement of chemical processes designed to convert the raw material, crude oil—whose properties will vary—into a range of products with very tight specifications (Figure 17.1). In what the author states is a brief review of the refinery, King (1988) follows the product flow and identifies the principal refinery processes listed in Table 17.1. Selected operations identified in Table 17.1 have been chosen for coverage since they represent the typical occupational health issues in these complex facilities.

Although a huge array of equipment including furnaces, heat exchangers, pumps, tanks, fractionating columns, pipes, pipe fittings, and valves are employed in the refinery, the facility can be divided into a number of operations to help the industrial hygienist make a reasonable inventory of health hazards (API, 1979; NIOSH, 1983; Runion, 1988).

17.2.1 Pretreatment of Crude Oil

As noted in Table 17.1, the crude oil must be dewatered and desalted before it is subjected to the first refining step. Since specifications require that crude oil transported by pipeline contain less than 5% water, dewatering is first done at the oil field site and then repeated at the refinery to break the oil–water emulsification formed during pipeline transport. One demulsification technique includes adding fatty acids or sulfonates and decanting. A second common technique uses a diatomaceous earth filter-aid to strip the interfacial film from the globules, permitting downstream decanting of water (API, 1979).

Crude oil also contains particulate contaminants, including sand, which may plug screens and trays, various ions such as chlorides, which are corrosive to equipment, and inorganic salts which may poison catalysts employed in many critical refinery operations. All of these contaminants must be removed in pretreatment or subsequent refinery operations. The hazards involved in dewatering and desalting depend, to a large extent, on the characteristics of the crude oil, but frequently include exposure to hydrogen sulfide and benzene (Runion, 1988). In filtration–dewatering there is an exposure to dusts of diatomaceous earth and cristobalite, a toxic crystalline silica formed in the calcining of the mineral.

In certain oil fields sulfur compounds including mercaptans, disulfides, and hydrogen sulfide leach out of the surrounding geological mass into the oil. The total sulfur content of crude oil may vary from less than 0.2% in some Persian Gulf locations to greater than 4% in Mexican and Venezuelan fields. High-sulfur crude oils have a major impact on refinery operation because of their corrosive effects

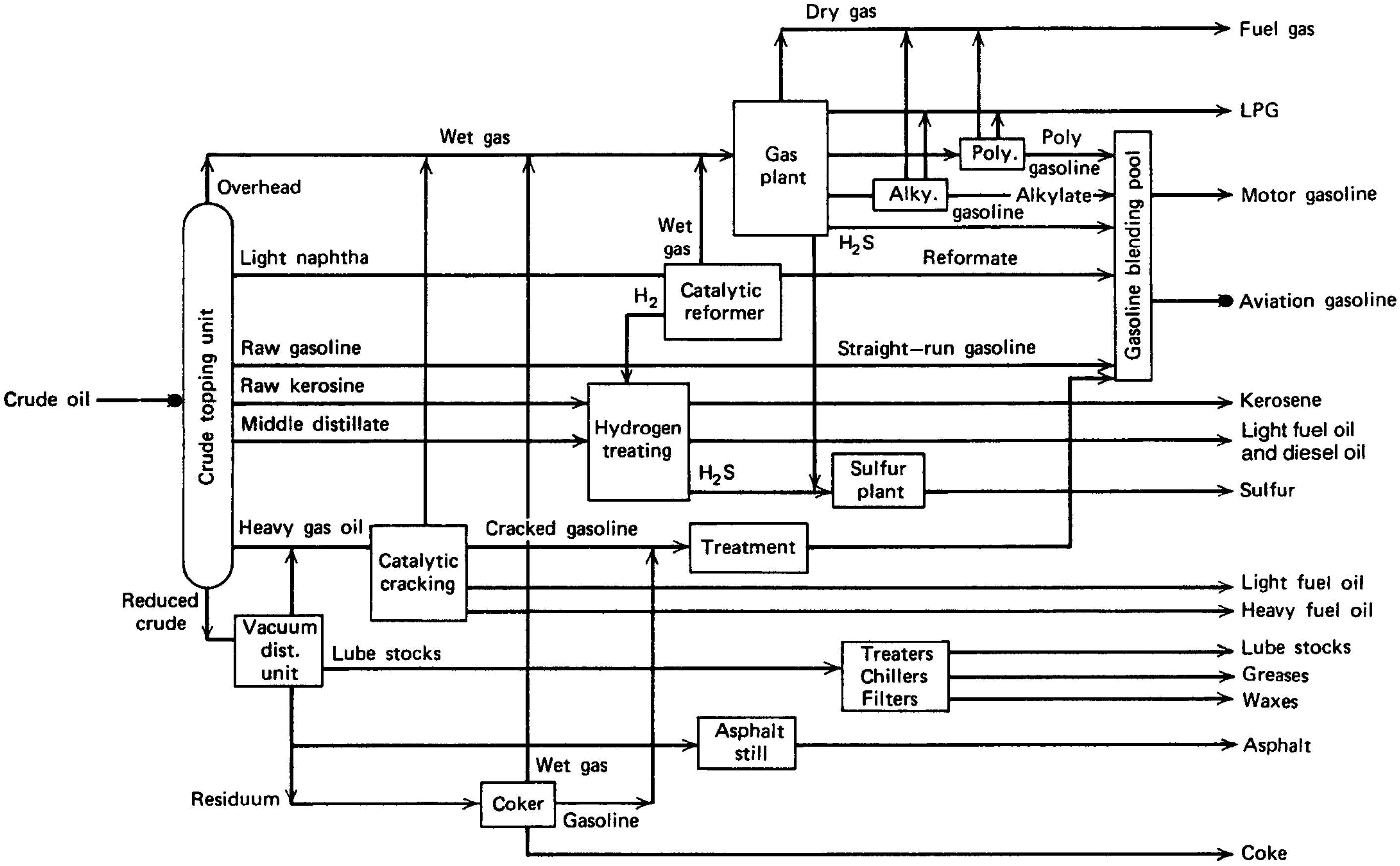

Figure 17.1 Flow diagram for refinery. Courtesy of American Petroleum Institute, 1979.

TABLE 17.1 Major Processing Units in Petroleum Refinery[a]

- Crude separation
  - *Dewatering*
  - *Desalting*
  - *Atmospheric distillation*
  - *Vacuum distillation*
- Light hydrocarbon processing
  - Polymerication
  - *Alkylation*
  - Naphtha hydrodesulfurization
  - Isomerization
  - *Catalytic reforming*
- Middle distillate processing
  - Chemical sweetening
  - Kerosine hydrodesulfurization
  - Gas oil hydrodesulfurization
  - *Catalytic cracking*
  - Catalytic hydrocracking
- Heavy hydrocarbon processing
  - Visbreaking
  - *Coking*
  - Lubricating oil processing
  - Deasphalting

Source: Adapted from King (1988).

[a] Processes in italics are discussed in text.

on equipment and ability to poison catalysts. In addition, mercaptans have olfactory threshold concentrations in the parts per billion range and present an environmental problem; hydrogen sulfide is acutely toxic. However, it is for the operational reasons noted above that sulfur compounds must be removed. For many years sulfuric acid was used to extract sulfur-based compounds, thereby forming an acid sludge. To eliminate the sludge disposal problem, sulfuric acid was replaced with hydrofluoric acid. This acid is difficult to handle, and if water is present in the crude oil, it becomes very corrosive. The acid methods have been replaced with a catalytic technique using nickel, cobalt, and molybdenum-based catalysts in granular, pellet, or powdered form (Runion, 1988).

Each of the desulfurization processes presents specific health hazards. The original sulfuric acid method had potential acid and alkaline mist exposures in mixing, settling, and sludge disposal. Hydrofluoric acid treatment resulted in potential liquid and spray contact in addition to major health and safety handling problems. King (1988) states that the major concerns with the catalytic systems are exposure to hydrogen sulfide and the fire and explosion potential from hydrogen leaks. In addition, cobalt and nickel carbonyl may be formed. Runion (1988) cites concentrations of hydrogen sulfide in refinery gas streams of 1000–300,000 ppm; water drain-off drums may contain 100–15,000 ppm on a w/w basis. Florky (1984) has noted the wide range of sources of hydrogen sulfide encountered in refineries in

Table 17.2. Minor leaks encountered in maintenance and during manual sampling of various streams may easily result in concentrations of hydrogen sulfide of 300 ppm, which is the concentration immediately hazardous to life or health. If cobalt or nickel carbonyl is formed in catalytic regeneration, there may be significant exposure to these known carcinogens during turnarounds. These compounds are only formed if the unit is operated with excess hydrogen concentrations and at a reduced operating temperature (Runion, 1988).

17.2.2 Crude Oil Separation

The initial refinery process, crude distillation, involves separation of the oil into various fractions or "cuts," which have specific boiling temperature ranges, utilizing an *atmospheric distillation tower*. These fractions lack a definite chemical formula, being defined solely by their boiling ranges. A single distillation does not produce the desired quantities or quality of each product. Therefore, less desirable products must be transformed to more desirable products by splitting, uniting, or rearranging the original molecular structures. An integrated refinery carries on these processes simultaneously, as shown in Figure 17.1.

The first step is to dewater and desalt the crude oil. It is then processed through a direct-fired furnace, where partial vaporization of the crude oil occurs. The oil is heated to 340–345°C (640–650°F) before it is delivered to the atmospheric distillation tower or fractionator. With a diameter of 8–24 ft and a height of up to 150 ft, the distillation tower is a major architectural feature of refineries.

Atmospheric distillation towers are cylindrical towers that contain a series of horizontal bubble trays. Heated oil pumped to the tower splits into two fractions; the vapor starts to ascend the tower while the unvaporized reduced crude is withdrawn from the bottom of the tower for processing in a vacuum distillation unit. The vapor cools as it flows upward, and the high boiling point fractions condense out in the lower trays.

The trays are designed so that the vapor must bubble through the cooler condensate in the bottom of the tray; the lighter hydrocarbons boil off and the heavy fractions in the vapor are condensed (Figure 17.2). The lower boiling point fractions continue upward until all condensable fractions are collected on selected trays. The final uncondensed wet gas stream is taken to a gas plant for additional

TABLE 17.2 Sources and Concentrations of Hydrogen Sulfide in Petroleum Refineries

Source	Concentration (%)
Crude oil	Greater than 0.5
Vapor recovery of catalytic cracker	5–6
Vapor recovery of crude unit	7
Shallow pit around leak from condensate	0.3
Catalytic desulfurization	2–3
Regeneration of cobalt–molybdenum catalyst	1
Air above crude oil storage tanks	0.0001–1

Source: Florky (1984).

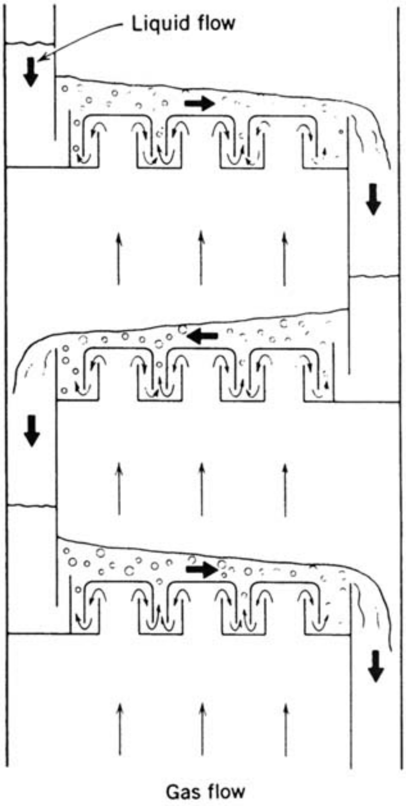

Figure 17.2 Trays in distillation tower.

treatment. In refinery parlance, wet gas identifies a vapor containing high proportions of hydrocarbons recoverable as liquids.

The material condensed on the trays is removed by side take-offs and is processed through steam strippers where the low boiling point compounds are stripped off and reintroduced into the tower. The residuum, or the very high boiling point materials that do not vaporize, are stripped to retrieve the lower boiling point hydrocarbons and the residuum goes to the next process, vacuum vaporization.

Exposures that occur in the atmospheric distillation process include hydrogen sulfide from sour crudes, usually from the light naphtha fractions (Runion, 1988). Aromatic hydrocarbons including benzene, toluene, and xylol are present in the light and heavy naphtha streams. The processing of other streams containing olefinic, paraffinic, and naphthenic hydrocarbons represent potential exposures to mixed hydrocarbon vapors.

17.2.3 Reduced Crude

It would be ideal if narrower hydrocarbon fractions could be obtained with the atmospheric distillation tower and theoretically this could be accomplished by in-

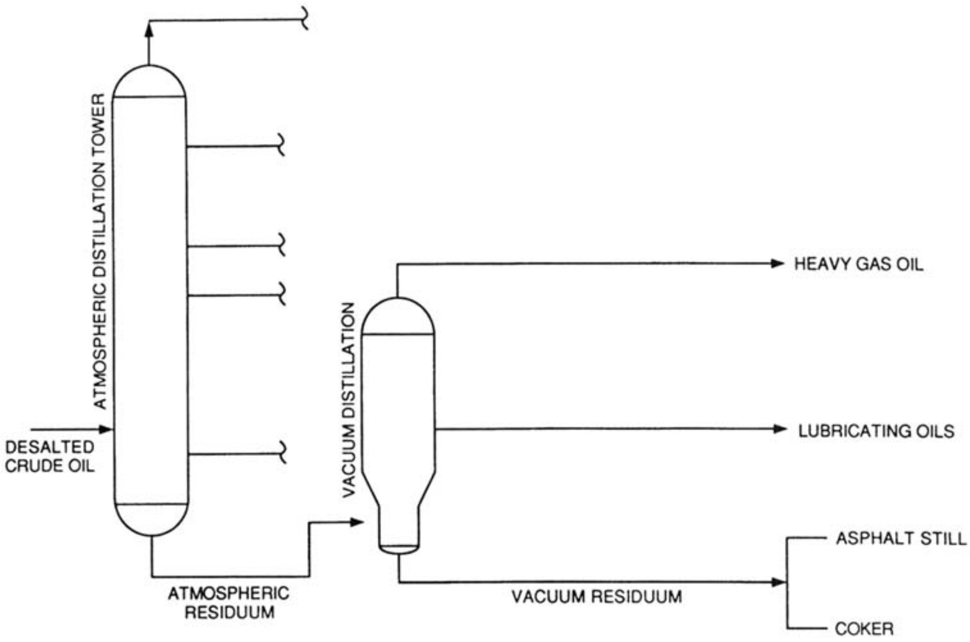

Figure 17.3 Vacuum distillation streams.

creasing the operating temperature of the tower. However, if this were done it would result in several untoward effects, including thermal degradation of the feedstock. An alternate approach is to operate a distillation tower under vacuum using steam ejectors or mechanical pumps as the vacuum source (Figure 17.3). The feedstock for this vacuum distillation tower is the residuum from the atmospheric distillation tower heated to 400°C (750°F). Both the vacuum and atmospheric distillation towers produces a vacuum gas which is a feedstock for catalytic cracking into gasoline and one or more heavy distillate streams for lubricating oil stocks (Figure 17.3). The residuum from vacuum distillation is used to make asphalt, provides feedstock for the coker, or may undergo cracking.

The principal hazard in the vacuum distillation process is skin contact, with resulting dermatoses. Asphalt, in particular, can be a photosensitizer. The distillation tower operating personnel also are exposed to hydrocarbon vapors, heat, and noise.

17.2.4 Heavy Gas Oil

Heavy gas oil streams from both atmospheric and vacuum distillation streams may be processed through a *catalytic cracker* to produce a product containing olefins, diolefins, aromatics, and naphthenes, as shown in Figure 17.4. This wide boiling range hydrocarbon stream can then be fractionated in a distillation column to provide a range of useful products or new feedstocks. The catalytic cracking and fractionating column are joined in an integrated unit, as described below.

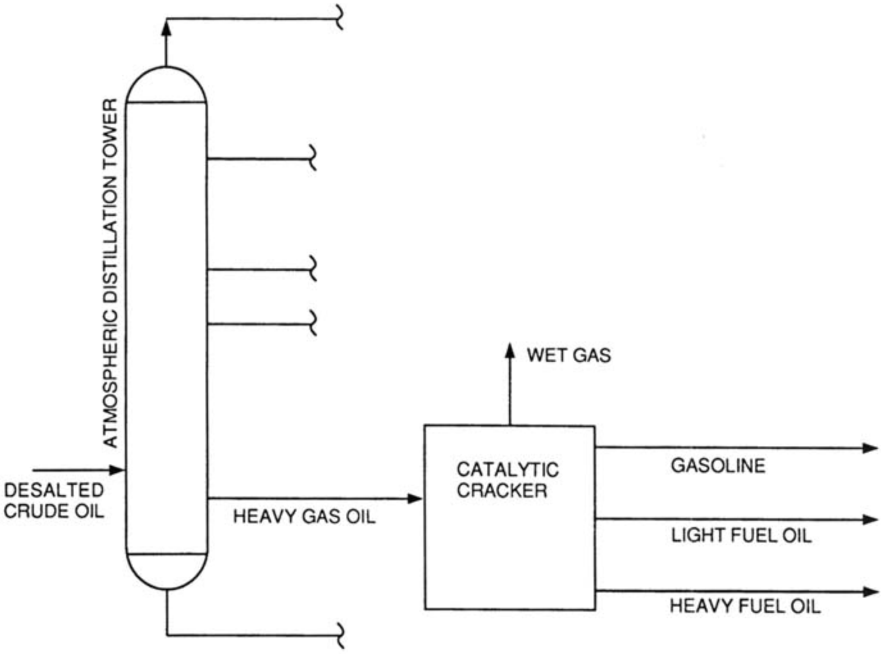

Figure 17.4 Catalytic cracker streams.

The heavy oil from the atmospheric fractionating column is fed to the catalytic cracker at 470–550°C (880–1020°F) and 10–30 psig. The catalysts, including synthetic zeolites, alumina-silicates, or clays in pellet or powder form, have a low order of toxicity. Contact between the catalyst and the stream, achieved by fixed, moving, or fluidized beds, results in 50–80% cracking of the feedstock to gasoline in one pass. A characteristic of the operation is the formation of a high percentage of aromatics. The balance of the feed is available as light and heavy fuel oil. The surface of the catalyst is fouled by light deposits of carbon and must be regenerated by heating the catalyst in air at a temperature of 540–650°C (1000–1200°F). In the regeneration process, the carbon burns off with the formation of carbon dioxide and carbon monoxide; the latter is burned as fuel in various process furnaces.

Since the product stream from this operation contains high concentrations of aromatic hydrocarbons, there is a potential exposure to benzene, toluene, and xylene. The high carbon monoxide concentration may result in serious exposures if leakage occurs. The density of powered ancillary equipment, including blowers, pumps, furnaces and air-release noise, results in noise levels in the range of 85 to 115 dBA. Heavy oil bottoms containing polynuclear aromatic hydrocarbons are potent skin irritants and potential carcinogens.

The cracked product is "sweetened" by converting mercaptans to disulfides by treatment with lead oxide, saturated caustic, cuprous chloride, or sodium hypochlorite. The hazards depend on the process being used.

17.2.5 Middle Distillate

The middle distillates and raw kerosine are treated in the *hydrotreating plant* (also known as hydrogenation, and hydrogen treating), as shown in Figure 17.5. This operation converts these feedstocks to lower boiling point products. In a first-stage operation at 370°C (700°F) and a pressure of 3000 psig, sulfur and nitrogen are removed (King, 1988). Cracking occurs in the second stage on a cobalt–molybdenum or cobalt–nickel catalytic bed at a temperature of 315°C (600°F) and a pressure of 1500 psig. Products with a wide boiling point range are formed which can be fractionated into useful products (e.g., kerosine, light fuel oil, and diesel oil). The very high operating pressures in these plants result in significant control valve noise.

17.2.6 Heavy Naphtha

The naphtha stream containing naphthenes and paraffins is processed through the regenerative *catalytic reforming* unit which converts these materials to aromatic hydrocarbons (Figure 17.6). This process is conducted at elevated temperatures with either a noble metal catalyst such as platinum or palladium or a nickel–cobalt based catalyst. The product is used directly at the refinery as reformate to increase the octane rating for gasoline or it is sold as a feedstock for petrochemical operations.

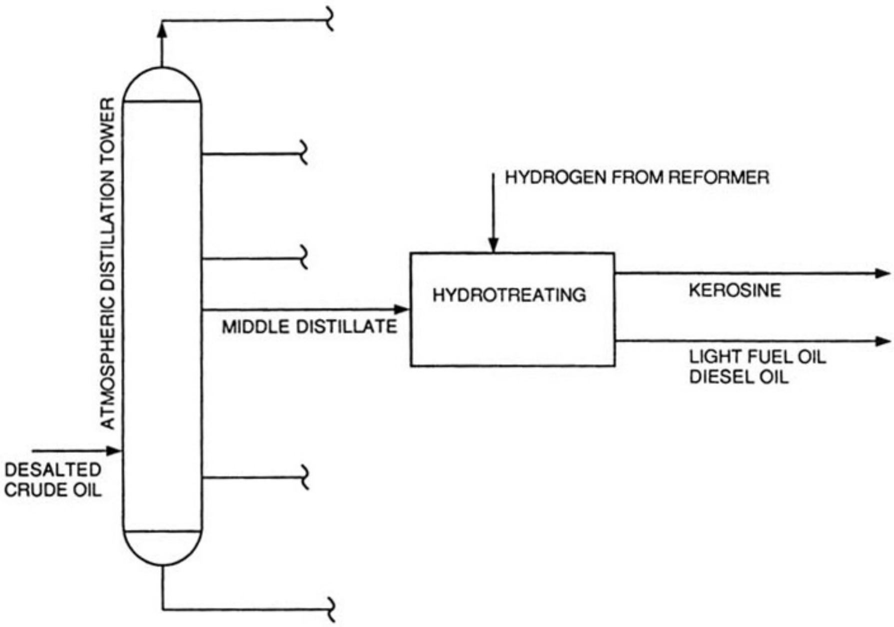

Figure 17.5 Hydrotreating streams.

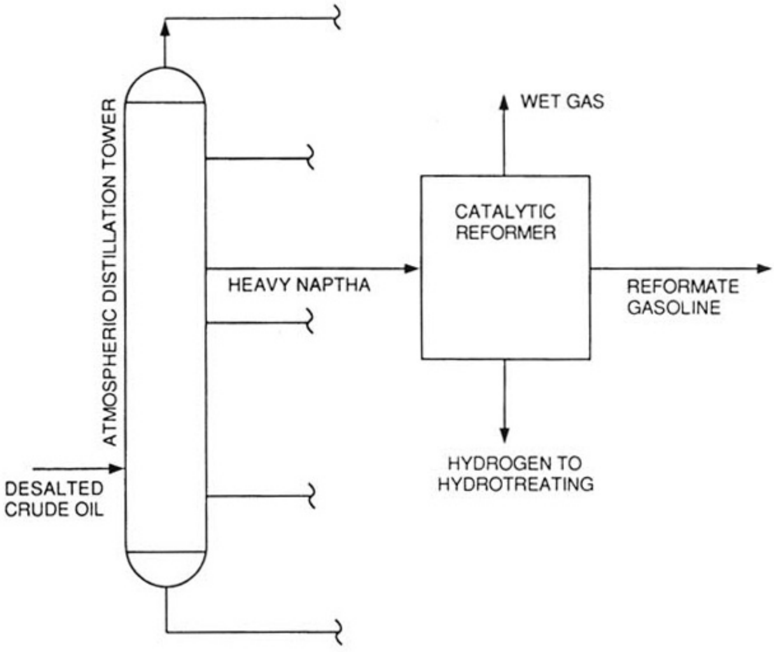

Figure 17.6 Reformer streams.

The principal health hazards include exposure to fugitive losses from the product stream that contains high concentrations of benzene, toluene, and xylene. When the catalyst bed is changed it must be inerted to prevent it from catching fire. Although nitrogen is widely used as an inerting gas, some refineries use combustion gases as the blanketing or "inert gas". Unfortunately, the combustion gases contain high concentrations of carbon monoxide, which presents two problems. The first is the obvious exposure to lethal concentrations of carbon monoxide in confined spaces. The second is the potential for the formation of cobalt and nickel carbonyl. The hydrogen gas formed in the process is utilized in other operations including hydrotreating. The major health hazards are associated with confined space entry into tanks and towers that have been inerted.

17.2.7 Straight Run Naphtha

The lowest boiling fraction, which comes off the top of the primary distillation tower, is first processed in the gas plant, where liquid hydrocarbons found in the wet gas are separated from fuel gases such as propane and butane. As noted, wet gas refers to a vapor containing high proportions of condensable hydrocarbons. Some of the hydrocarbons are run straight through to the gasoline blending plant, but others must be carried through an *alkylation* process (Figure 17.7). In that process olefins, including ethylene, propylene, and butylene are passed over an acid

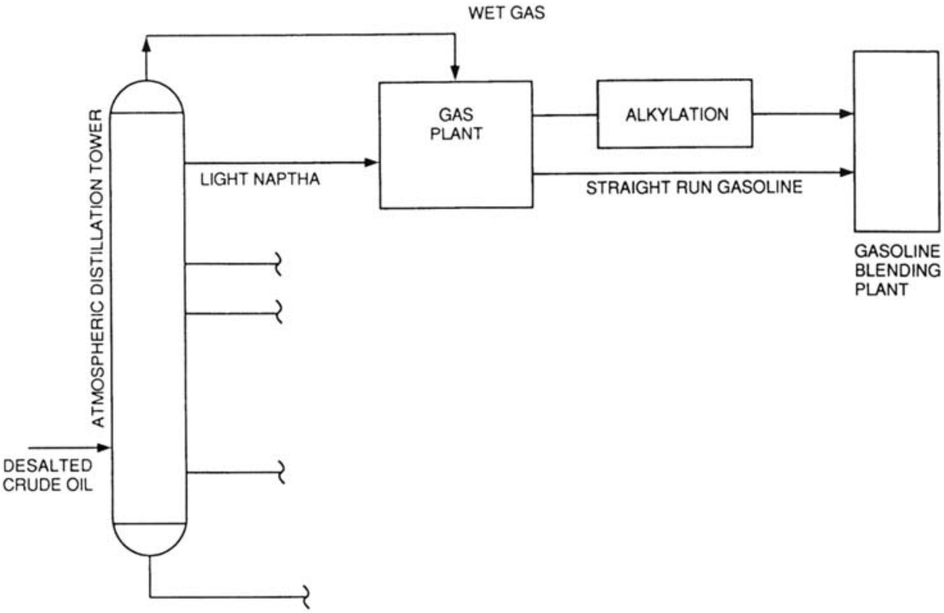

Figure 17.7 Alkylation streams.

catalyst in a reactor operating at approximately 100–150 psig to form naphtha and other hydrocarbons with a broad boiling point range (King, 1988). The stream is then fractionated by distillation to isolate the required products. The common catalysts are phosphoric, hydrofluoric, or sulfuric acid on a granular support. Exposure to the catalysts presents the main hazard of this process.

The final processing involves blending of the various materials to obtain a specific product. There may be exposure to various antiknock and other additives in the gasoline, kerosine, or lubrication oil products.

17.2.8 Petroleum Coke

The bottom materials or residuum from the vacuum distillation unit is transferred to the coking facility for thermal cracking by either the fluid or delayed coking processes to produce wet gas, gasoline, and coke. If the refinery does not have a coker the residuum goes to an asphalt still or to hydrocracking. In the delayed coker, the most common process in the United States, the feedstock is first charged to a fractionating tower and all components lighter than gas oil are stripped off (Figure 17.8). The remaining material is pumped to the coking heater [480–580°C (900–1080°F)]. The vaporized material is then charged to the coke drum, a 20-story cylindrical tower, where it is coked at 380°C (720°F). After the process is completed, the coke is cut out, first with a mechanical drill and then a water jet. It is dewatered after it drops from the base of the drum and is stored in open piles for transport by

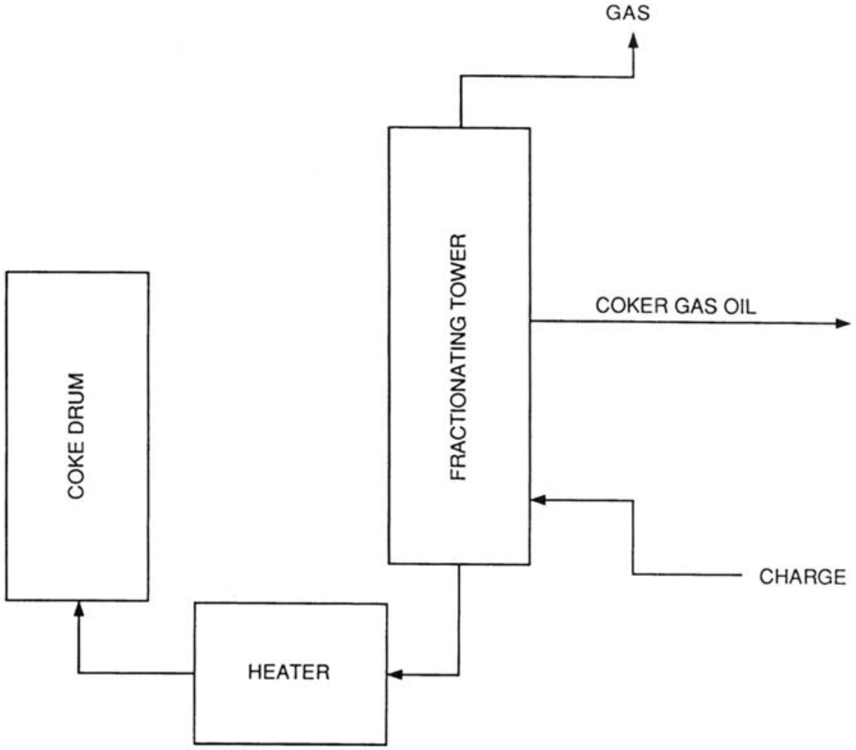

Figure 17.8 A delayed coker.

truck or train. The potential health hazards in the delayed coking operation include exposures to coke dust, aromatic hydrocarbons, and carbon monoxide.

17.3 FIELD STUDIES

Published data from comprehensive industrial hygiene studies of refineries in the United States are limited; however, NIOSH has sponsored a three-refinery study of worker exposure to carcinogens in fluid catalytic crackers, delayed cokers, and asphalt processing (NIOSH, 1983). The study included fixed-location sampling of 29 polycyclic aromatic hydrocarbons (PAH), 9 aromatic amines, 7 nitrosamines, 6 trace metals, and nickel carbonyl. No detectable quantities of nitrosamines, trace metals, or nickel carbonyl were found. Trace quantities of aromatic amines were found at the fluidized catalytic cracker. Four to 15 PAH compounds were found in most of the samples. The PAH air concentrations noted in the catalytic crackers ranged from 0 to 467 $\mu g/m^3$, the delayed coker ranged from 2.9 to 28.1 $\mu g/m^3$, and the asphalt processing units from 0.05 to 4.9 $\mu g/m^3$. The available data on refinery workplace exposures has been assembled by Runion (1988) and is shown in Tables 17.3 and 17.4.

TABLE 17.3 **Exposure Profile of Refinery Workers by Processing Unit.**

			Principal Health Hazards from Chemical and Physical Agents	
Process or Operation	Job Task in Active Work areas	Agent(s)	Exposure Levels Without Personal Protection	Extent of Exposure Opportunity for Normal Operations
Crude distillation (atmospheric)	Monitoring and servicing unit equipment sampling, etc.	H_2S	0–1.0 ppm	Intermittent
		Noise	90–105 dbA	Continuous
		Benzene	<1 ppm	Intermittent
		Naphthas	Skin	Intermittent
		Kerosene	Skin	Intermittent
		Gas oils	Skin	Intermittent
		Bottoms	Skin	Intermittent
Crude distillation (vacuum)	Monitoring and servicing unit equipment sampling, etc.	Medium-heavy naphthenics	Skin	Intermittent
		Slop oils	Skin	Intermittent
		Unoxidized asphalts	Skin	Intermittent
Catalytic cracking and regenerative catalytic reforming	Monitoring and servicing unit equipment, sampling, etc.	Catalytic cracked heavy distillate	Skin	Intermittent
		Decanted oil	Skin	Intermittent
	Servicing catalysts effluent collection systems	Light reformate naphtha	No data available	Intermittent
		Carbon monoxide	0–10 ppm	Intermittent
		Benzene	0.1–1.0 ppm	Intermittent
		Heavy reformate still bottoms	Skin	Intermittent
		Spent catalysts	No data available	Intermittent
		Noise	85–100 dbA	Continuous
Polymerization or alkylation	Monitoring and servicing unit equipment, sampling, etc.	Hydrogen fluoride	<0.2 ppm	Infrequent
		H_2SO_4	No data available	Infrequent
		Light naphthas	2–20 ppm	Intermittent
		Noise	85–100 dbA	Continuous
		Medium-heavy napthenics	Skin	Intermittent
		Acid sludge	Skin	Infrequent
Isomerization	Monitoring and servicing unit equipment, sampling, etc. Servicing catalyst effluent collection systems	Light naphthas	2–20 ppm	Intermittent
		Benzene	0.1–1.0 ppm	Intermittent

Source: Adapted from Runion (1988).

The author has reviewed a single delayed coking operation and found that the exposures to aromatic hydrocarbons were less than 1 ppm and less than 10 ppm to carbon monoxide. The carbon monoxide exposures on the upper work platforms reflected contaminants from nearby combustion stacks. The application of coal tar pitch volatiles sampling, although questionable for this exposure, showed that the

TABLE 17.4 Composite Exposure Profile of Workers in Refineries

			Principal Health Hazards from Chemical and Physical Agents	
Process or Operation	Job Task in Active Work areas	Agent(s)	Exposure Levels Without Personal Protection	Extent of Exposure Opportunity for Normal Operations
Sampling and gauging in refinery process area	Tape and bob measuring and bottle sampling	Benzene	<1.0 ppm (8-hr TWA)	Intermittent
Sampling and gauging in tank farm tanks	Tape and bob measuring and bottle sampling	Benzene	0.5 ppm (median for 19, 15-min samples with range 0.1–26.7 ppm)	Intermittent
General plant operations	Composite plant-wide data	Total hydrocarbons	(Personal samples approx. 7 hr of exposure) 5.4 ppm mean	Continuous
General plant operations	Composited plant-wide data	Total hydrocarbons	5.0 ppm mean	Continuous
General plant operations	Composited refinery-wide data	Benzene	Benzene: 727 personal samples of which 378 > 4 hrs of exposure (52%) were < 0.1 ppm	Continuous
General plant operations	Composited data	Benzene	14,824 samples from industrywide survey; mean = 0.22 ppm	
Dock product off loading	Dock personnel connecting gasoline and disconnecting service lines	Gasoline vapors	230.6 ppm mean	Intermittent

Source: Adapted from Runion (1988).

ACGIH TLV of 0.2 mg/m^3 could be exceeded during cutting out of the coke and transport of coke by front end loaders. Venable (1974) has identified carcinogenic PAH in condensed tarry deposits from coke drum vent stacks.

The most effective measure employed to reduce refinery airborne hydrocarbon vapors in the last 20 years has been the result of action by the EPA directed to air pollution control. The bulk of the extant data on fugitive losses of VOCs has been

TABLE 17.5 Typical Noise Levels in Refinery Operations

Area	Noise Level (dBA)
Hydrotreating plant	93–100
Fluid cracker	89–115
Hydrofluoric acid alkylation unit	89–100
Catalytic hydrocracking	90–100
Crude distillation	85–111

Source: Florky (1984).

developed under EPA sponsorship. The initial effort was to define the control approaches to handle thousands of emission sources, releasing up to 10,000 lb a day of VOCs from one refinery. The fugitive losses from valves, flanges, and other fittings have now been quantified and control programs have resulted in major reductions in losses. These data are presented elsewhere (e.g., Lipton and Lynch, 1987). A comprehensive review of all control technology in refineries, including noise control, has been published by NIOSH (1983).

The noise exposures at the principal refinery operations are shown in Table 17.5. Noise originates from furnace burners, blowers, compressors, control valves, electric motors, steam turbines, and steam leaks. The time-weighted full-shift exposures of both operating personnel and maintenance workers will have great variability, but in most cases will exceed the OSHA PEL of 85 dbA. Hearing conservation programs must be implemented in refineries.

REFERENCES

API (1979), Industrial Hygiene Monitoring Manual for Petroleum Refineries and Selected Petrochemical Operations, Report #26, 6010, American Petroleum Institute, Washington, DC.

API (1982), Medical Management of Chemical Exposures in the Petroleum Industry, American Petroleum Institute, Washington, DC.

Florky, R. (1984), personal communication.

King, R. (1988), in *Occupational Medicine, The Petroleum Industry, State of the Art Reviews*, Vol. 3, N. K. Weaver, Ed., Hanley and Belfus, Inc., Philadelphia, PA, pp. 409–430.

Lipton, S. and Lynch, J. (1987), *Health Hazard Control in the Chemical Process Industry*, Wiley, New York.

NIOSH (1983), *Control Technology Assessment of Selected Petroleum Refinery Operations*, Publ. No. 83-257-436, National Institute for Occupational Safety and Health, Cincinnati, OH.

Runion H. (1988), in *Occupational Medicine, The Petroleum Industry, State of the Art Reviews*, Vol. 3, N. K. Weaver, Ed., Hanley and Belfus, Inc., pp. 431–444.

Venable, F. S. (1974), *The Medical Bulletin*, Exxon, New York, NY.

CHAPTER 18

Rubber Products

18.1 INTRODUCTION

The first rigid polymer based on natural rubber has been joined by at least two dozen synthetic rubber polymers for the manufacture of a variety of industrial products including vehicle tires, belting, hoses, footwear, rainwear, and chemical protective clothing including gloves, aprons, and respirator facepieces. These products are made by coating techniques, extrusion, calendering, and compression molding. The rubber workers in the United States, numbering over 200,000 in approximately 1500 plants, have been the subject of a number of epidemiologic studies.

In a series of such studies supported by the United Rubber Workers and the major US tire companies, excess stomach cancer was identified in compounding workers, excess lung cancer in curing operators, and leukemia in tire builders (Monson and Nakano, 1976a). In a follow-up study the authors also identified excess pancreatic, prostate, and colon cancer in rubber workers (Monson and Nakano, 1976b). In a third paper the investigators noted excess deaths from bladder cancer, leukemia in white workers, in addition to esophageal cancer, biliary and liver cancer, lymphoma, and multiple myeloma (Delzell and Monson, 1981). In this same series of studies, Fine and Peters (1976a,b) noted increased respiratory morbidity and pulmonary function decrement in processing workers in tire plants. European studies have also defined excess disease in rubber workers (IARC, 1982).

18.2 MATERIALS

18.2.1 Rubber

More than 3 million metric tons of natural and synthetic rubber are used annually in the manufacture of products for shock absorption, sealing, corrosion protection, electrical and thermal insulation, load bearing, tires, footwear, hose, clothing and household goods. The naturally rubber is harvested from the tropical rubber tree (Hevea brasiliensis) by recovery of the milk-like serum (latex) from the inner bark of the tree. The naturally occurring latex is a dispersion of rubber in aqueous fluid.The rubber is precipitated out of this solution, a preservative such as ammonia, formaldehyde, or sodium sulfite is added, and the rubber is baled for shipment. Although the natural rubber as recovered from the tree has many admirable qualities, its application in the raw state is limited owing to its great plasticity but minimal elasticity. Vulcanizing, the crosslinking of molecules activated by sulfur compounds, reduces its plasticity and increases its elasticity. The vulcanizing conditions (time, temperature, and pressure), coupled with the choice of chemical additives, permit the formulator to modify the material for a specific product.

In this century a series of synthetic rubbers were developed (Table 18.1) including Thiokol rubber (polysulfide) in the 1920s, neoprene rubber (chloroprene), and Buna rubber (styrene butadiene) in the 1930s. The synthetic rubbers are frequently blended with natural rubber to meet specific requirements. Styrene–butadiene rubber represents one-half the total consumption of all rubbers in the United States, and of that amount, one-half goes into auto tires.

TABLE 18.1 Types of Rubbers in Order of Appearance

Natural rubber
Polysulfide polymers
Polychloroprene
Nitrile rubber
Styrene–butadiene rubber
Butyl rubber
Polybutadiene
Silicone rubber
Acrylic rubber
Chlorosulfonated polyethylene
Polyurethanes
cis-Polybutadiene
cis-Polyisoprene
Fluorine-containing elastomers
Epichlorohydrin elastomers
Ethylene–propylenediene elastomers

Both synthetic and natural rubber have limitations for certain applications. These qualities, however, can usually be corrected by various additives. The addition of various chemicals to the rubber is called compounding and, as discussed in Section 18.3.1, this process offers opportunities for exposure to a range of toxic chemicals in powder form. In the compounding operation, the first material to be added is an accelerator, then the plasticizer, reinforcing agents, antioxidant, fillers, and colorants. This bulk material is then processed through a mixer and stored as sheet stock. In this condition it is known as master batch material. As required, it is processed through a warm-up mill, the vulcanizing agent is added, and the material is used in the product being manufactured.

18.2.2 Additives

Various rubber processing chemicals are used to permit fabrication into finished product and to ensure specific properties for the product. Usually organic materials, these chemicals are added in relatively small quantities to the rubber stock formula. A normal tread stock recipe (Table 18.5) gives an idea of the quantities of materials involved. The chemicals and production facilities employed in processing these rubber materials are similar and can be discussed in a general fashion.

Sulfur is still the most important vulcanizing agent, used either as elemental sulfur or in one of many organic forms, as shown in Table 18.2. The vulcanizing agent may be added in the initial preparation of the batch or to the master batch material just prior to the final fabrication and curing processes. Since the early 1900s, chemical accelerators have been added to rubber systems to hasten vulcanization. Initially, inorganic lead compounds were used, then aniline compounds, and now the principal accelerators in use are a series of organic compounds listed in Table 18.3. At present, the thiazole accelerators, such as benzothiazole sulfenamides, are the most widely used. In conjuction with the vulcanizer and the accelerator, chemical compounds called acitvators are added to the batch to achieve a given property. The common activators include zinc oxide, fatty acids, litharge, magnesium oxide, amines, and amine soaps.

Stabilizers are designed to protect the polymer during extended storage before its end use in manufacturing. Antioxidants are added to the batch to protect the finished product; the type and concentration of the antioxidant will vary with the location and usage of the product. The important antioxidants, which include

TABLE 18.2 Rubber Vulcanizing Agents

Tetramethylthiuram disulfide
Tetrathiuram disulfide
Dipentamethylene thiuram tetrasulfide
4,4-Dithiodimorpholine
Selenium diethyldithiocarbamate
Aliphatic polysulfide polymer
Alkylphenol disulfides

TABLE 18.3 Commercial Accelerators

Aldehyde–amine reaction products
Arylguanidines
Dithiocarbonates
Thiuram sulfides
Thiazoles
Sulfenamides
Xanthates
Thioureas

arylamines and phenols, are listed in Table 18.4. [An antioxidant containing β-napthylamine as a contaminant in a concentration of 0.25% was identified as the agent that caused bladder cancer in rubber workers in England in the 1950s. This material was banned and excess bladder cancer is no longer seen in the UK rubber worker population (Parkes et al., 1982).] The principal antiozonants are symmetrical *p*-phenylenediamine, unsymmetrical *p*-phenylenediamine, dihydroquinolines, and dithiocarbonate metal salts. Paraffin and microcrystalline waxes also are used in rubber components. The antiozonant formulation is very important in tires made for the Los Angeles market because of the high ozone levels in that area.

The viscosity and therefore the workability of the rubbers can be improved by adding organic lubricants or physical softeners to the rubber. These additives may include coal tar, petroleum oils, ester plasticizers, liquid rubbers, fats and oils, and synthetic resins. The final additive is the pigment, which principally contributes addition color, but is also applied as a reinforcement, filler, or extender. The common pigments are carbon black, zinc oxide, clay, and silicates.

In a comprehensive review of the mutagenicity of rubber compounding additives (Scand. 1983), 15 of the 46 additives tested were found to be positive by a bacterial test system.

TABLE 18.4 Commercial Antioxidants

Arylamines
Aldehyde-amines
Aldehyde-imines
Ketone-amines
p-Phenylenediamines
Diarylamines
Alkylated diarylamines
Ketone-diarylamines
Phenols
Substituted phenols
Alkylated bisphenols
Substituted hydroquinones
Thiobisphenols

18.3 MANUFACTURING PROCESSES

18.3.1 Compounding and Mixing

In most rubber manufacturing the routine operations involve preparation of master batches of rubber with Banbury mixers. The three major raw materials included rubber stock, carbon black, and chemical additives. A schematic of the production pathway is shown in Figure 18.1. The formula or rubber recipe for a given product is chosen by the rubber chemist (Table 18.5). In the compounding process, the natural or synthetic rubber is received at the workstation in bale form and is cut into weighable pieces with a guillotine cutter, as shown in Figure 18.1. The various rubber chemicals specified in the formula are then weighed out for a specific batch size. This operation involves opening bagged and barreled material and placing it in hoppers for weighing. Since most of the compounds are powders or grains, this usually is a dusty operation, and weigh stations must be exhausted. Where possible, small quantities of chemicals should be prepackaged in plastic bags that can be placed directly in the batch, thereby eliminating a dust exposure when emptying bag contents. The chemical additives described in Section 18.2.2 are weighed out in plastic or paper bags and placed on the charging conveyor with the rubber, as shown in Figure 18.2. An automatic weigh system delivers a given amount of carbon black directly to the mixer from either a remote silo, a rigid container located near the Banbury, or a flexible bulk container. Such automatic, closed-pipe delivery systems have had a major impact on the exposure of workers to carbon black. Only the very small job shop will now manually dump bags of carbon black into the mixer with its resulting dust exposure. The carbon black, preweighed rubber, and additives on the conveyor are then charged to the Banbury, the charge door closes, and the mass falls into the mixer chamber where it is homogenized to ensure uniform dispersion of all ingredients (Figure 18.3). This system requires a large powerful motor drive, reduction gears, and a drive system and as a result the nearby work areas exceed the OSHA PEL of 85 dBA.

Reviewing the compounding operations shown in Figure 18.1, the major exposures occur during the preweighing or compounding work where the chemical

TABLE 18.5 Natural Rubber Tire Tread Compounds

Material	Parts
Natural rubber	100
Sulfur	3
Accelerator	1
Zinc oxide	5
Stearic acid	1
Antioxidant	1
Softener	5
Pigment	50
Total	166

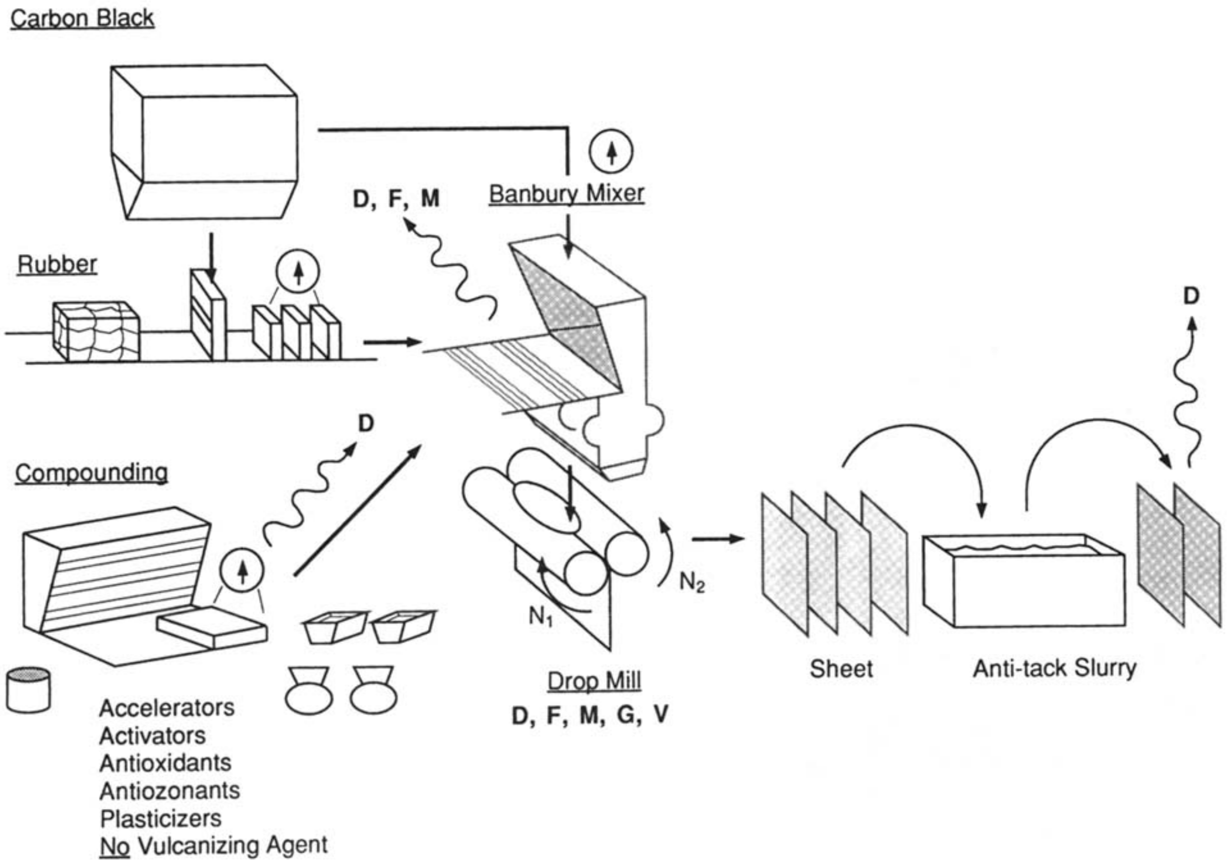

Figure 18.1 Schematic of compounding and mixing processes for the preparation of a rubber master batch with arrows showing the dust (D), fume (F), mist (M), and solvent vapor (V) release points.

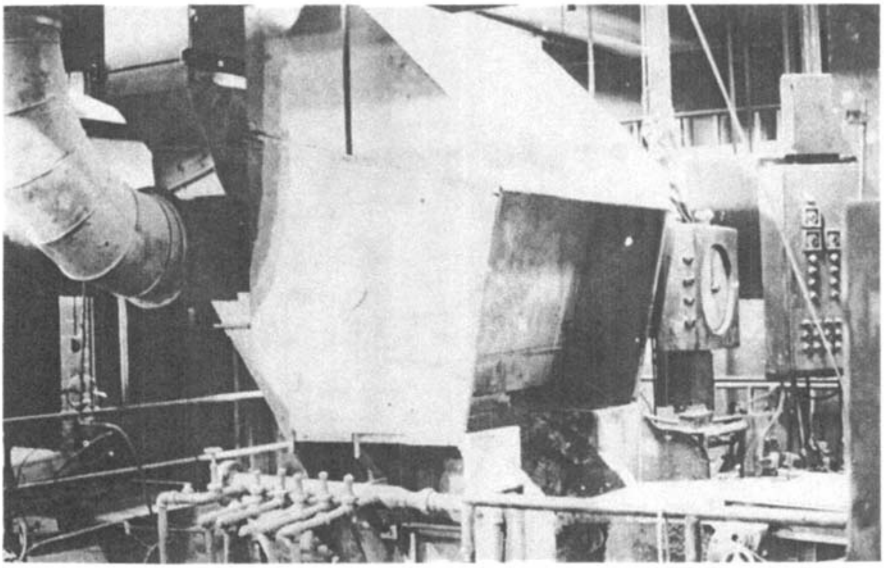

Figure 18.2 A charging conveyor on a Banbury mixer equipped with local exhaust ventilation.

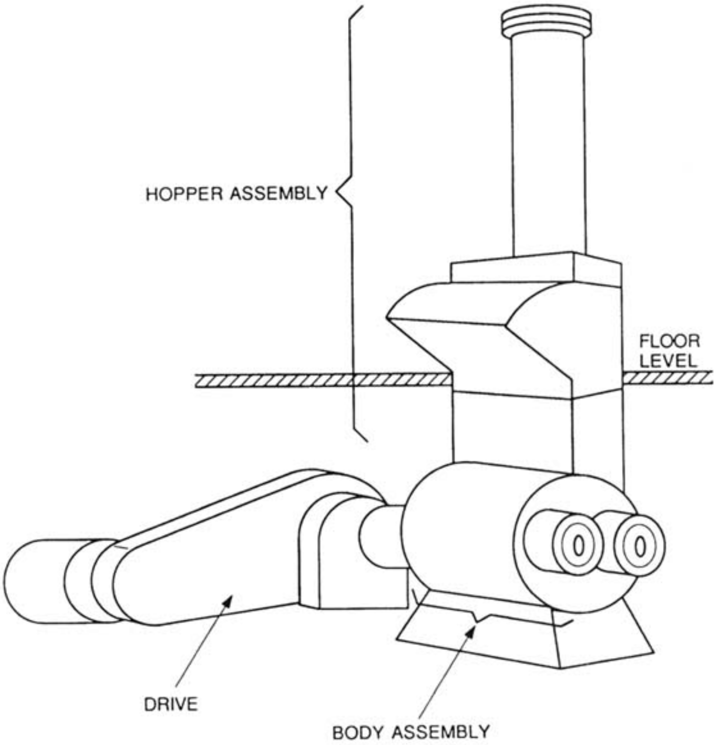

Figure 18.3 A Banbury system.

additives are scooped from the bulk bags or drums and weighed into plastic bags. As noted in extensive data from a study of tire plants in the United States (Table 18.6), Williams et al. (1980) cited a median concentration of 0.69 mg/m^3 with a range of 0.39–1.57 mg/m^3 during compounding; the Banbury operators were exposed to about the same concentration as in compounding. Data from a survey of plants in the Netherlands (Swuste et al., 1993), summarized in Table 18.7, show concentrations somewhat lower for weighing operations in general rubber production plants. Mixing and milling operations had a geometric mean concentration of about 0.70 mg/m^3. This exposure can be minimized by proper ventilation and work practice controls, as will be discussed later. The most effective control of the dust exposure in compounding is a computer-controlled weighing system which delivers the required amount of material to the mixer without manual intervention.

As noted in Figure 18.1, when the Banbury door is opened and the charge is dumped, an exposure occurs to the dust of the chemical additives, condensed fume, and oil mist. This exposure cloud is hard to characterize and equally difficult to control. The most effective control is a partial enclosing hood, shown in Figure 18.2. As noted above, in normal practice the exposure of the mixer operator is in the range of 1–2 mg/m^3 depending on the workload and the efficacy of the ventilation control. The installation of well-designed ventilation on this process is frequently neutralized by the disruptive effects of drafts from pedestal fans positioned to cool the operator.

After the mixing operation is completed, the Banbury mixer charge is discharged to a drop mill located directly under the mixer on a lower floor. The two-roll mill shown in Figure 18.4 has rolls 2–3 ft in diameter which rotate in different directions at different speeds. This process generates considerable heat and the rolls

TABLE 18.6 Air Concentration of Respirable Particulates by Personal Sampling

	Concentration (mg/m^3)[a]		
OTG	Median	(No. of Plants)	Range
Compounding	0.69	(9)	0.39– 1.57
Banbury	0.64	(10)	0.33– 1.47
Milling	0.48	(10)	0.10– 0.88
Tread extrusion	0.53	(2)	0.14– 0.91
Calendering	0.28	(1)	
Bead building	0.24	(2)	0.23– 0.24
Tire curing	0.43	(3)	0.03– 1.0
Tire finishing, inspection, and repair	0.22	(11)	0.04– 0.58
Tube curing	0.65	(7)	0.29– 1.67

Source: Williams et al. (1980).

[a] Column entries are the middle value, or mean of two middle values, of plant arithmetic mean concentrations, the number of plant means (in parentheses), and the range of plant mean concentrations.

TABLE 18.7 Personal Exposure to Inspirable Particulates (Geometric Mean and 95% Confidence Interval)

	Particulate exposure (mg/m^{-3})		
	N^a	GM^b	95% CI^c
Compounding, mixing and supply	99	2.0	1.5–2.5
Pretreating uncured product	62	1.0	0.8–1.3
Molding uncured product	130	1.8	1.2–2.5
Curing	184	0.7	0.6–0.8
Finishing product	90	1.0	0.7–1.3
Dispatch	43	1.1	0.8–1.4
Maintenance	50	0.9	0.7–1.2
Laboratory	8	0.2	0.1–1.4

Source: Adapted from Swuste et al. (1993).

[a] Total number of personal exposure measurements to particulates was 666.

[b] Geometric mean.

[c] Confidence interval.

must be cooled with water. During this transfer the hot stock may release volatile fractions of oils, high vapor pressure organic components, or possibly degradation products of the worked material. If biocidal additives are in the formula, they may also be released. The mills are usually provided with canopy-type hoods to take advantage of the hot, buoyant, rising air; however, the operator is exposed to particulate exposures with a median concentration of 0.5 mg/m^3 (Table 18.6). At the drop mill the stock is blended, sheeted, cooled, and cut for racking.

When the drop mill processing is completed, the rubber is slit and sheeted off to a conveyor. This work requires that the operator be positioned directly in front of the mill and leaning over the rolls. Accidents have occurred when clothing or hair is caught in the nip of the mill, pulling in the worker and causing serious injury. For this reason the mills are provided with an emergency bar or cable to shut down the mill. All workers are trained in emergency response for such an incident.

The sheeted rubber stock is cut into slabs and the slabs are dipped in an antitack solution, as shown in Figure 18.1. The antitack material is frequently based on a clay, soapstone, or talc and is designed to prevent sticking. If talc or soapstone is used, it should be analyzed to ensure that it does not contain asbestiform material and that it has negligible free silica. The wet slurry process is obviously the most desirable way to add the antitack material since the level of dustiness is much lower than for dry dusting. Exposure to the antitack occurs when the solution is prepared, when make-up is added, and from the dried residual which is resuspended from the slabs. Recently, antitack soap solution that does not dust off has been used.

The rubber material which has been prepared is called master batch and has all the necessary ingredients except the vulcanizing agent. Master batches are normally made as an interim material and stored on pallets until needed for a production run.

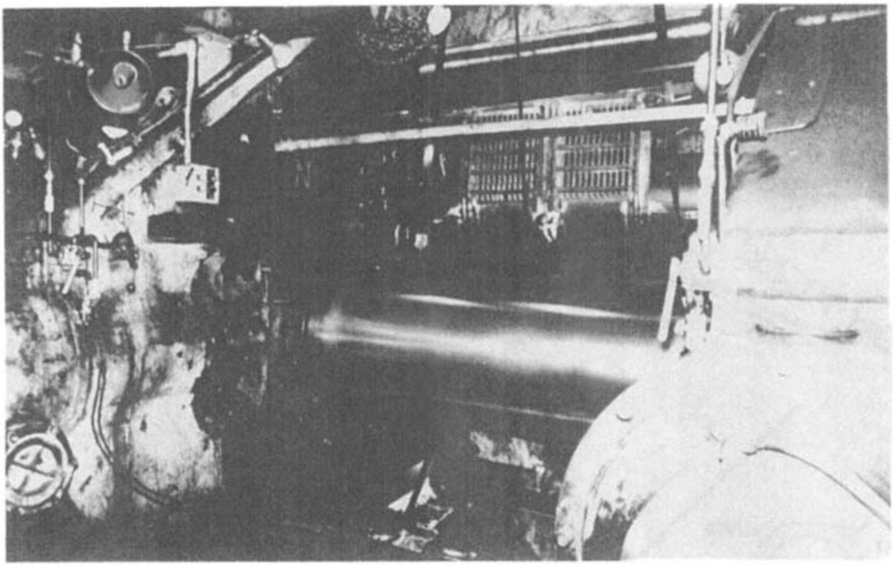

Figure 18.4 A drop mill under a Banbury mixer with a canopy exhaust hood and an emergency shutdown bar.

At that time the slab rubber is worked on a Banbury, breakdown, or feed mill, and the sulfur-bearing vulcanizing agent is added and homogenized with the master batch.

18.3.2 Processing

Since the manufacturing steps in tire production shown in Figure 18.5 involve all of the processes encountered in general rubber manufacturing except molding, they provide a convenient way to identify the major occupational health issues. In the process flow for the manufacture of an automobile tire, three piece parts must be fabricated: (1) the tire bead, which is a rubber-coated steel wire ring that holds the tire on the wheel rim; (2) plystock, which is rubber coated fabric used in multiple layers to build the oval structure of the tire; and (3) the solid rubber tread, which is the road-bearing element (Figure 18.5). Although many research programs have sought to develop an automated method for injection molding a tire from plastic, manual tire building with rubber, using a built-up concept, continues to be the method of choice.

The general process flow for the manufacture of these three main components of a tire is shown in Figure 18.5. In this schematic, the rubber is processed from one feed mill to the three processes as a convenience in presentation. This is not the case in the manufacturing plant, where a special compounded rubber would be used for each part.

In the manufacture of the bead the shredded rubber is mixed with solvent to make a viscous material which is used to coat the wire ring. The cement is pre-

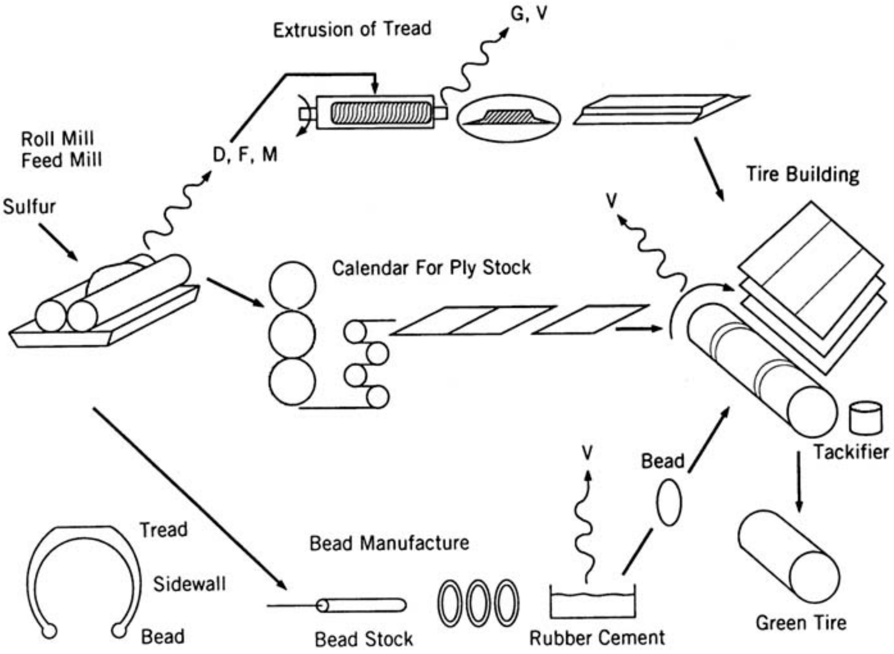

Figure 18.5 Schematic of processing of rubber materials to form the various piece parts for radial automobile tires including the bead, tread, and plystock. The tire is built up on the machine form. The arrows show the dust (D), fume (F), mist (M), and solvent vapor (V) release points.

pared in a dedicated room called the cement house, designed for the mixing of flammable solvents and constructed to conform to fire protection codes. Benzene was used in cements decades ago, the normal solvent now is hexane or white gasoline. A viscous rubber is used to coat the bead; the form is then covered with a rubberized fabric. The observed exposure to hexane in a tire plant is shown in Table 18.8. (Williams et al., 1980).

The manufacture of the plystock (ply) is completed on the calender shown in Figure 18.6. The strength and flexibility of the tire is based on a radial structural belt consisting of several layers of a reinforced fabric made by filling and coating the fabric with rubber. The synthetic fiber fabric is woven with a fine steel wire reinforcing structure. It is fed through the calender and led to a roll-up station or directly to a cutting bench. At the entrance nip to the calendar, a softened lump of rubber is pulled through with the fabric, smearing the fabric and filling it with rubber. The calender is designed to provide close tolerance on thickness of the fabric-rubber material. The continuous web is cooled and cut to length, depending on the tire size. The calender operator is exposed to low solvent vapor concentrations and fume from condensed high boiling hydrocarbons. The total particle concentration is less than 0.5 mg/m^3.

In the manufacture of the tread, rubber is again fed from a feed mill to an extruder. The material enters a heated-screw feed barrel where it is compressed and forced out a die with a profile reflecting the shape and size of the tread. As the hot continuous extrudate comes out of the extruder there is some fume and vapor. The tread is picked up on a conveyor and cut to length, and a roll spreads rubber cement on the side that will bond to the tire carcass (Figure 18.7). The cement is a mix of rubber and a solvent, usually hexane. The total particulate exposure at the extruder operator's workstation is usually about 0.2–0.4 mg/m^3. Since the cement spreading tank is provided with local exhaust ventilation, the solvent concentrations are low, as noted in Table 18.8.

18.3.3 Assembly

The assembly of the tire is now completed by the tire builder, as noted in Figure 18.5. The three components—bead, ply stock, and tread—are positioned at the tire builders' station in a file called a book. The tire building machine is basically a rotating cylinder sized for a certain tire that acts as a form for the construction of the tire (Figure 18.8). After the tire is built, the cylinder collapses so the tire can be removed. The two beads are first positioned on the drum and the inner plies are placed on the drum as it is rotated by an operator. The operator applies a small amount of tackifier (solvent) to the plies with a pad as he lays them up so that they will bond during vulcanization. This tackifier is usually a white gasoline that may have some aromatic content. Before the assembly is cured (vulcanized) it is called a green tire, a term used throughout the rubber industry to identify an un-

TABLE 18.8 Air concentrations of Solvents by Occupational Title Group (OTG)

	Concentration (ppm)[a]				
OTG	Pentane	Hexane	Heptane	Benzene	Toluene
Cement mixing					
Personnel	3.9(7)	15.7(8)	2.8(8)	0.5(8)	3.1(8)
Area	0.9(8)	9.5(9)	4.7(7)	1.0(8)	2.9(8)
Extrusion					
Personnel	1.4(9)	5.9(9)	13.6(9)	0.8(9)	9.5(9)
Area	5.4(4)	12.2(4)	10.2(4)	1.2(4)	14.0(4)
Tire building					
Personnel	1.8(10)	11.2(10)	5.7(9)	1.4(10)	1.5(10)
Area	5.8(2)	19.3(3)	14.6(3)	1.9(2)	8.0(2)
Curing					
Personnel	0.8(8)	7.5(9)	4.9(7)	0.8(9)	1.2(9)
Area	1.8(2)	25.9(3)	7.5(2)	0.8(2)	0.6(3)
Inspection and repair					
Personnel	1.5(3)	6.0(3)	3.1(3)	1.1(3)	0.8(3)
Area	1.3(3)	6.6(3)	4.2(3)	0.6(3)	1.9(3)

Source: Van Ert el al. (1980).

[a] Column entries are the middle value, or mean of two middle values, of plant arithmetic mean concentration, and the number of plant means (in parentheses).

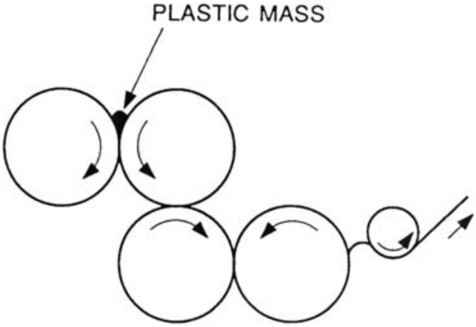

Figure 18.6 A four-roll calender which can generate thin sheets of rubber of precise thickness and can be used to "fill" a textile with a rubber compound.

cured rubber product. The particulate concentration in tire building is low, reflecting the general background in the tire plant of about 0.2 mg/m^3. Solvent exposures at the tire builders' workstation may be significant, as noted in Table 18.8 (Williams et al., 1980), especially if the tackifier contains benzene at the percent level.

18.3.4 Curing

In the final work sequence shown in Figure 18.9, the green tire is sprayed with a parting material prior to curing. Until the mid 1970s this spray was petroleum-based but, owing to environmental concerns, it has been replaced with water-based materials. After this step the tire is taken to the curing area where the operation is

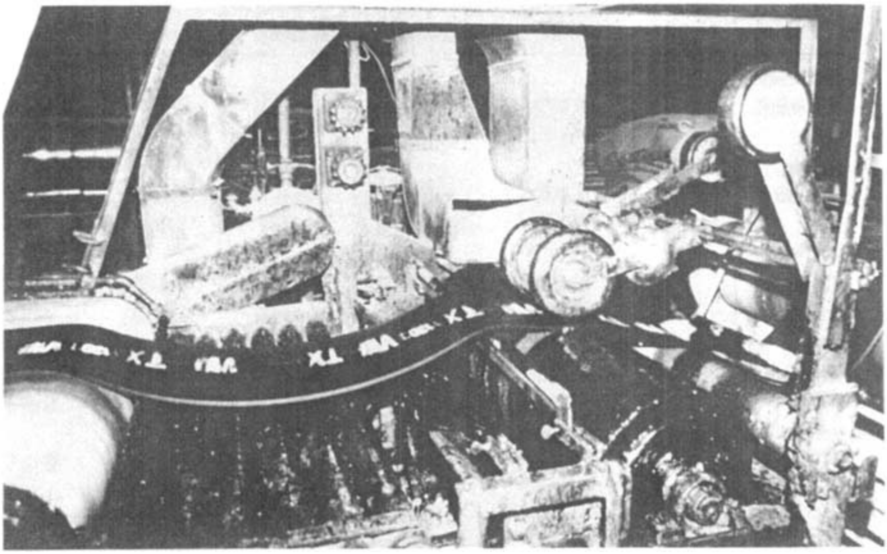

Figure 18.7 A coating of adhesive is applied to the tread after it is extruded.

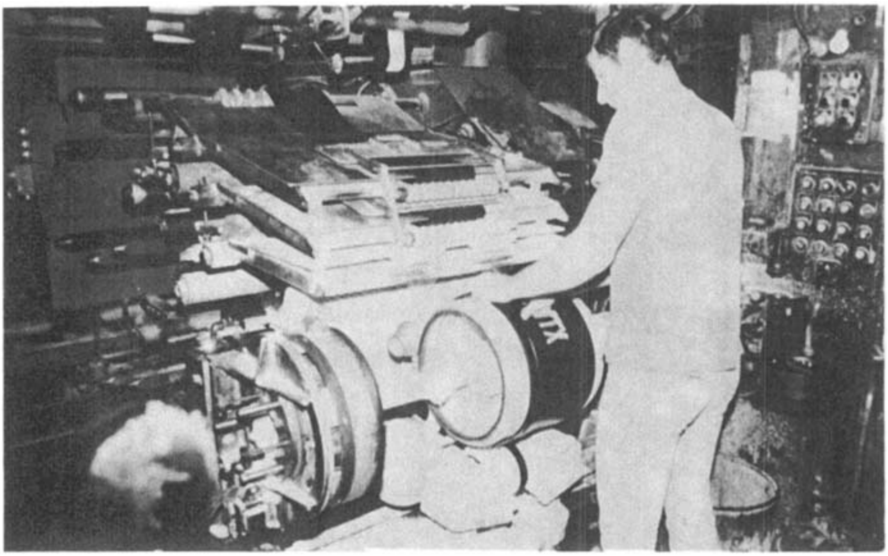

Figure 18.8 A tire builder stands at his machine with the book, holding the various plies, located over the barrel-shaped form on which a small tire is built.

conducted either manually or automatically. In manual curing, the operator places the tire form over a flexible bladder and the clamshell press is closed (Figure 18.10). The bladder is then inflated with live steam or hot water which drives the tire form against the inside of an aluminum mold with the tread profile. The curing press is heated to 100–200°C (210–390°F) for 20–60 min and curing, or the cross linking of the rubber, takes place as a result of the action of the sulfur-based compound added at the mill operation. The process of vulcanization gives the tire

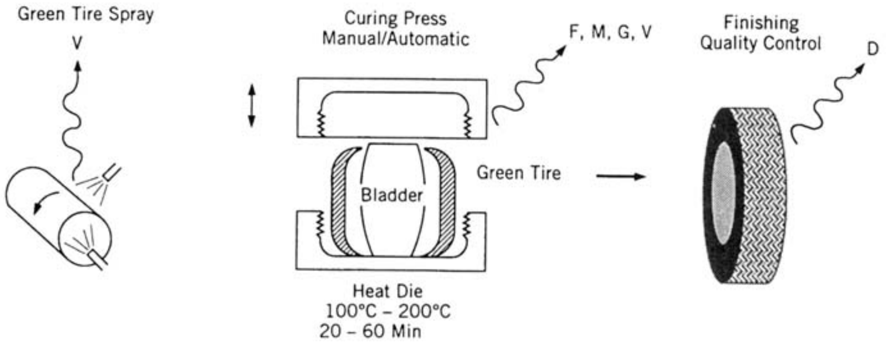

Figure 18.9 Schematic of the spraying of the tire form with a parting material followed by curing of the tire in a steam-heated press. The arrows show the dust (D), fume (F), mist (M), and solvent vapor (V) release points.

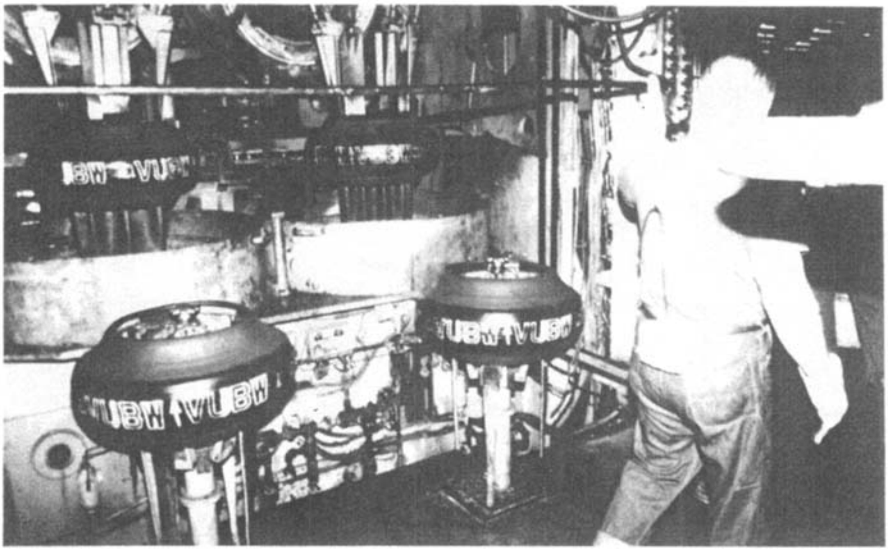

Figure 18.10 A clamshell curing press.

its great strength and elasticity. In a high-production tire plant the curing line is automatic. The operator spots the green tire at a loading station adjacent to the curing press. The tire is picked up automatically and positioned in the cavity of the press, the press closes, and curing commences.

The exposure in the press room is to the cloud released when the press opens after each cycle. The exact composition of the curing fume is not known, but early studies by Rappaport (1978) indicate a wide range of organic species. In an assay of the mutagenicity of particulates from air samples from this curing fume, 7 out of 8 samples were positive (Scand., 1982). The same bacterial test system demonstrated an increase in mutagenicity in the urine samples of tire workers. In addition, a high-density curing press line may result in heat stress to the operators.

All assembled rubber products require curing with heat. These procedures vary and may present specific hazards. Large conveyor belts are cured in flat, steam-heated presses. Water hose is cured by extruding a lead sheath over the hose and directing steam inside to cure the part. Continuous bath and drum curing are also conducted. Certain problems are common to all curing operations and include release of curing fume, whose composition and concentration depends on the rubber stock and the curing temperature, heat stress due to the steam release and convective heat load, and noise exposure from air and steam release.

18.4 EXPOSURE PROFILE

The air-sampling data cited in the text on various rubber plant operations is from two rather different studies. The first is a major survey of airborne contaminants in United States tire plants completed in the 1970s by the Occupational Health

Studies Group at the School of Public Health of North Carolina under the sponsorship of the United Rubber Workers Union and six major rubber product manufacturing companies (Williams, et al., 1980; Van Ert et al., 1980). Particle concentrations in air were evaluated in 14 tire and tube manufacturing plants and these data are summarized in Table 18.6; solvent concentrations shown in Table 18.8 represent conditions in 10-tire manufacturing plants. The authors state that these values are from personal air samples and are the aggregate of all survey data, but they are not full-shift, time-weighted averages.

The second study cited in Table 18.7 was conducted in 10 rubber plants employing 1550 workers making a range of general rubber products (Swuste et al., 1993). These plants represent one-fourth of all rubber workers in the Netherlands. The air concentrations were based on fixed-location sampling and do not represent full-shift, time-weighted averages.

18.5 CONTROL TECHNIQUES

18.5.1 Dust

There are some general dust control approaches that reside with the purchase of the various raw materials. In the last two decades the rubber, pharmaceutical, pigment, and dyestuff industries have given attention to the dustiness of the raw materials they produce and use. Dustiness testing has been extended and significant product design changes have been adopted to minimize dustiness and worker exposure while maintaining product acceptance. In tire manufacture at least a dozen chemicals in granular form are added in small quantities to the batch mix. In an effort to minimize worker exposure to dust from these chemicals, the British Rubber Manufacturing Association (BRMA, 1978) sponsored the design of low dusting forms of these common chemicals. The properties of seven dust-controlled forms of rubber chemicals are reviewed by Hammond (1980) in Table 18.9. The author notes that the disadvantages of the most effective approach, coating the chemical with a polymer, include the variability in active chemical content based on bulk weight, the reduced chemical content, and the unsuitability of the polymer in the formulation.

In general, the more extensive the grinding or comminution of a granular material, the greater the dust hazard the material will present during transport, handling, and processing. When possible, one should purchase the most coarse form of the chemical that is suitable for the process.

The use of water to suppress dust has been a basic tenet of occupational health for decades. Its value is seen in the application of antitack compounds. Until the 1960s, dry talc or limestone was frequently dusted on the slabs of master batch material to keep it from sticking. This operation resulted in poor housekeeping and a significant exposure to dust. The present technique, adopted in the 1960s, involves dipping the stock in a water slurry of the antitack compound before racking for storage. This simple change resulted in a significant reduction in worker exposure to dust.

TABLE 18.9 Dust-Controlled Forms of Rubber Chemicals—Comparative Performance[a]

	Wax or Otherwise Bound					Polymer Bound	
Property	Untreated Powder	Soft Paste	Putty	Prills	Pellets/ Granules	Slab	Pellets Granules
Active content	5	3	4	5	4	4	4
Convenience of handling	3	1	2	4	5	2	5
Freedom from dust	1	5	5	4	4	5	5
General cleanliness and safety	1	1	2	3	3	5	5
Suitability for automatic weighing	3	1	1	4	4	1	5
Wastage	3	2	4	4	4	5	5
Ease of disposal of containers	3	1	3	3	4	4	4
Identification	—	—	—	—		—	—
Mill mixing behavior	3	1	3	3	3	5	4
Internal mixing behavior	5	2	3	5	5	5	5
Dispersion in rubber	5	5	4	3	4	4	4
Total	32	22	31	38	40	40	46

Source: Hammond (1980). Reprinted by permission of *Annals of Occupational Hygiene.*

[a] 5 = Excellent, 4 = good, 3 = average, 2 = below average, 1 = poor.

18.5.2 Solvent Vapors

As noted earlier, to ensure a good bond between the components of a built-up assembly, the rubber is made tacky by applying a small amount of solvent to the surface with a pad. For several decades this solvent was benzene. The worker exposure, probably in the range of 1–10 ppm, may be responsible for the excess leukemia seen in older tire builders. Starting in the 1950s, the industry started to replace benzene with white gasoline. In studies completed in the 1970s by the Harvard School of Public Health Joint Rubber Studies Group, the residual benzene content in white gasoline was 4–7% and air sampling indicated that one-third of the air samples on tire builders exceeded 1 ppm (Treitman, 1976). The OSHA PEL for benzene at that time was 10 ppm, although it was anticipated that it would be dropped to 1 ppm (this change did occur in 1987). Technical grade chemicals commonly have significant impurities. The level of contamination should be identified and if sufficiently high, worker exposure should be evaluated. At that time the necessity for reduction in the impurity level can be determined.

18.5.3 Curing Fume

One of the most difficult air contaminant control problems in the rubber industry is the fume released from curing or compression molding presses. Control of this fume is necessary since, as mentioned in Section 18.1, studies have confirmed excess lung cancer in curing room workers and Ames tests have demonstrated that the fume is mutagenic. In addition, excess respiratory morbidity has been noted in this population. Two possible ventilation controls are available for this operation. The first, local exhaust, is the preferred approach, but it is extremely difficult to apply on these presses. One can envisage a local hood which is activated only when the clamshell press opens. This approach would require rather sophisticated controls and represents a major innovation in control technology in this industry Dilution ventilation is the conventional approach taken in most rubber plants. This would appear to be a reasonable application of this technique since there are a number of individual sources of contaminant, each press generates a relatively uniform mass of contaminant with minor temporal variations, and the contaminant is not highly toxic. In addition, the heat load from the presses requires exhaust and this can be done effectively by dilution ventilation. There are the obvious limitations in dilution ventilation, including high exhaust rates and the fact that the worker must be removed from the contaminant path. The initial installations in tire plants were straight dilution systems with roof exhausters, without any attempt at enclosure or designed replacement air supply. Later designs included enclosure by drop panels or curtains to form a large canopy over the curing press line. In some installations, the curtains dropped to within 10 ft of the floor, with replacement air provided by general systems. Later designs introduced the replacement air directly at the edge of the curtained enclosure.

The efficiency of these systems varies considerably. The sampling of respirable mass concentrations does show differences by enclosure design, but these are overshadowed by the differences in contaminant level noted between manual and automatic presses. The first recommendation for control of fume in the curing area is therefore to convert to automatic presses.

If dilution ventilation is chosen as the approach, the following general rules should apply:

1. Fixed or flexible curtains should be dropped to the lowest possible level to reduce the face area
2. The worker should be positioned outside the hood
3. A minimum face velocity of 80 fpm should be achieved at the canopy face
4. Replacement air should be introduced adjacent to the curing line but not directly at the canopy

18.5.4 Specific Ventilation Designs

The ACGIH ventilation manual includes designs of local exhaust hoods for a range of rubber processing equipment (ACGIH, 1992). In addition, an excellent set of designs is available in a handbook published by the Rubber and Plastic Research Association of Great Britain (RAPRA, 1979).

18.5.5 Handling Practices

The British Rubber Manufacturers Association has devised a risk classification that pemits the user to assign rubber accelerators, retarders, and antidegradants to one of four toxicity categories. This approach permits the user to devise appropriate handling procedures for the chemicals in use.

REFERENCES

ACGIH (1992), *Industrial Ventilation, A Manual of Recommended Practice*, 21st ed., Committee on Industrial Ventilation, American Conference of Industrial Hygienists, Cincinnati, OH.

BRMA (1978), *Toxicity and Safe Handling of Rubber Chemicals*, British Rubber Manufacturer's Association, England.

Delzell, E. and Monson, R. R. (1981), *J. Occup. Med.*, **23**, 677–684.

Fine, L. and Peters, J. (1976a), *Arch. Environ. Health*, **31**, 136–140.

Fine, L. and Peters, J. (1976b), *Arch. Environ. Health*, **31**, 297–303.

Hammond, C.M. (1980), *Ann. Occup. Hyg.*, **23**, 95–109.

IARC (1982), *IARC Monographs on the Evaluation of Cancinogenic Risk of Chemicals In The Rubber Industry*, Vol. 28, International Agency for Research on Cancer World Health Organization, Switzerland.

Monson, F. F. and Nakano, K. K. (1976a), *Am. J. Epid.*, **103**, 284–296.

Monson, F. F. and Nakano, K. K. (1976b), *Am. J. Epid.*, **103**, 297–303.

Parkes, H. G., Veys, C. A., Waterhouse, J. A. H., and Peters, A. (1982), *Brit. J. Ind. Med.*, **39**, 209–220.

Rappaport, S. (1977), *Am. Ind. Hyg. Assoc. J.*, **38**, 205–210.

RAPRA (1979), *Ventilation Handbook for the Rubber and Plastics Industries*, Rubber and Plastics Research Association of Great Britain, England.

Scand. (1983), Genotoxic health hazards in the rubber industry, *Scand. J. Work Environ. Health*, **9**, Suppl. 2, 1–93.

Swuste, P., Kromhout, H., and Drown, D. (1993), *Ann. Occup. Hyg.* **37**, 117–134.

Treitman, R. (1976), personal communication.

Van Ert, M.D., Arp, E. W., Harris, R. L., Symons, M. J., and Williams, T. M. (1980), *Am. Ind. Hyg. Assoc. J.*, **41**, 212–219.

Williams, T. M., Harris, R. L., Arp, E. W., Symons, M. J., and Van Ert, M. D. (1980), *Am. Ind. Hyg. Assoc. J.*, **41**, 204–211.

CHAPTER 19

Acids, Ammonia, and Chlorine

19.1 ACIDS

19.1.1 Hydrochloric Acid

Hydrogen chloride may be prepared by reacting sulfuric acid with sodium chloride to form sodium bisulfite, which then reacts with sodium chloride to form hydrogen chloride and sodium sulfate. The acid is made by absorbing hydrogen chloride gas in water in absorption towers. However, the bulk of the hydrochloric acid produced in the United States is formed as a by-product in the chlorination of organic compounds. In the presence of a catalyst, benzene, chlorine, and hydrogen are reacted to form chlorobenzene; hydrogen chloride is a reaction product. Benzene and chlorobenzene are first recovered, and the hydrogen chloride in the final stream is removed in a falling film absorption tower.

The principal hazard in these processes is exposure to either the leakage of gas and vapor from the system or to the tail gas from the scrubber. Present absorption tower design is adequate to minimize exposure of operating personnel and the neighborhood. The safety and handling procedures for hydrochloric acid have been published and include operating practice, protective clothing, eye protection, and respiratory protection.

19.1.2 Nitric Acid

The principal method for manufacturing nitric acid is the high-pressure ammonia oxidation process (Figure 19.1) in which air and ammonia (9.5–11%) are passed over a heated platinum–rhodium catalyst with the resultant oxidation of ammonia to yield nitric oxide (NO). In this process, the concentration of ammonia must be kept below the lower limit of flammability (15.5% in air) to avoid an explosion.

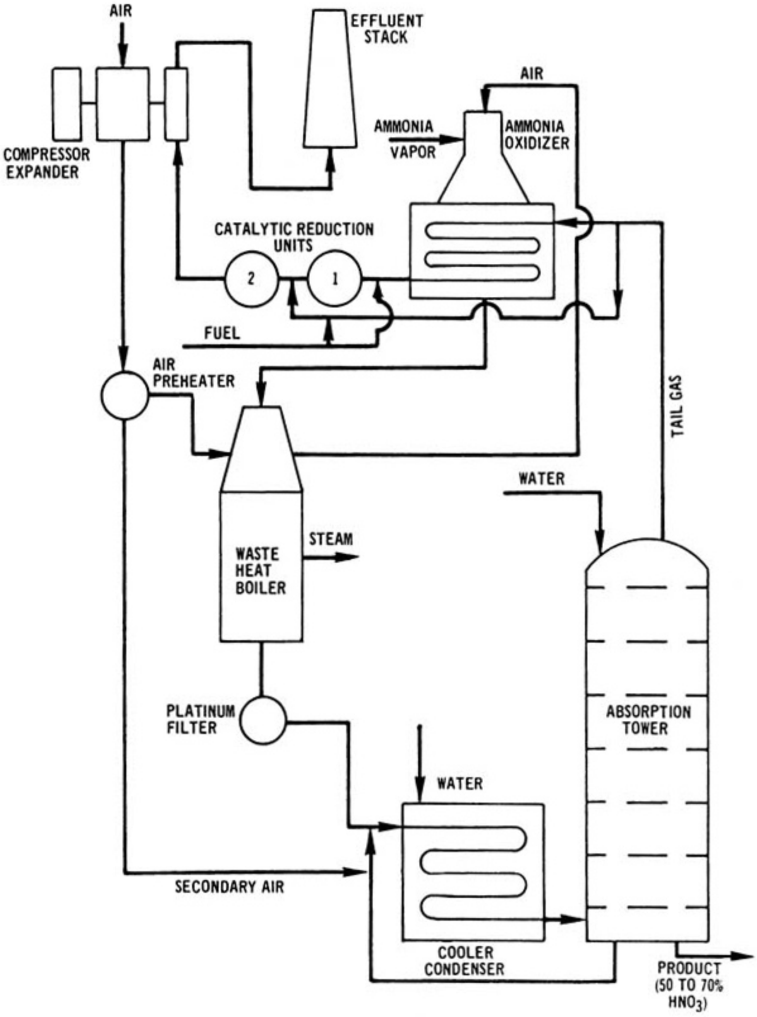

Figure 19.1 Flow diagram of a typical nitric acid plant using pressure process. Source: EPA (1973a).

The nitric oxide is oxidized to nitrogen dioxide (NO_2) in the reaction and is absorbed by water in a bubble-cap plate column to yield 50–70% nitric acid (HNO_3).

Nitric acid recovery plants may represent a significant exposure to oxides of nitrogen due to liquid or gas leaks and during on-stream sampling. The emissions from exhaust stacks or nitrogen dioxide scrubbers may also result in hazardous conditions at ground level since the concentration of total oxides of nitrogen in the tail gas stream may be as high as 0.3%. Air cleaning of the exhaust stream is based on the reduction of the oxides or absorption in alkaline liquors. The safety hazards in the handling of this acid are well documented and are, in general, those assigned to strong oxidizers.

Accidental exposure to ammonia also may occur because of escape of gas from storage tanks, gauge glasses, valves, and process lines. In addition to the health hazard from ammonia, a potential fire and explosion hazard may exist.

The serious respiratory hazards from nitrogen dioxide and ammonia necessitate a rigorous respiratory protection program for emergency escape and reentry. The usual requirements for personal protective equipment, showers, and well-defined work practices also apply to nitric acid plants.

19.1.3 Sulfuric Acid

The contact process for the manufacture of sulfuric acid is based on the catalytic conversion of sulfur dioxide (SO_2) to sulfur trioxide (SO_3) with absorption of the SO_3 in sulfuric acid. Sulfur dioxide may be obtained by burning elemental sulfur (8–11% SO_2), or roasting sulfide ores (7–4% SO_2), or from various metallurgical processes where SO_2 is present in process streams.

The conversion process from SO_2 to SO_3, shown in Figure 19.2, utilizes a converter tower containing several beds of a pentavalent vanadium catalyst in pellet form. The reaction in the converter ($2SO_2 + O_2 = 2SO_3$) is conducted at 400–600°C (750–1110°F). This stream is directed to the sulfuric acid absorption tower where tail gas concentrations of SO_2 may be as high as 2000 ppm. In a modification of

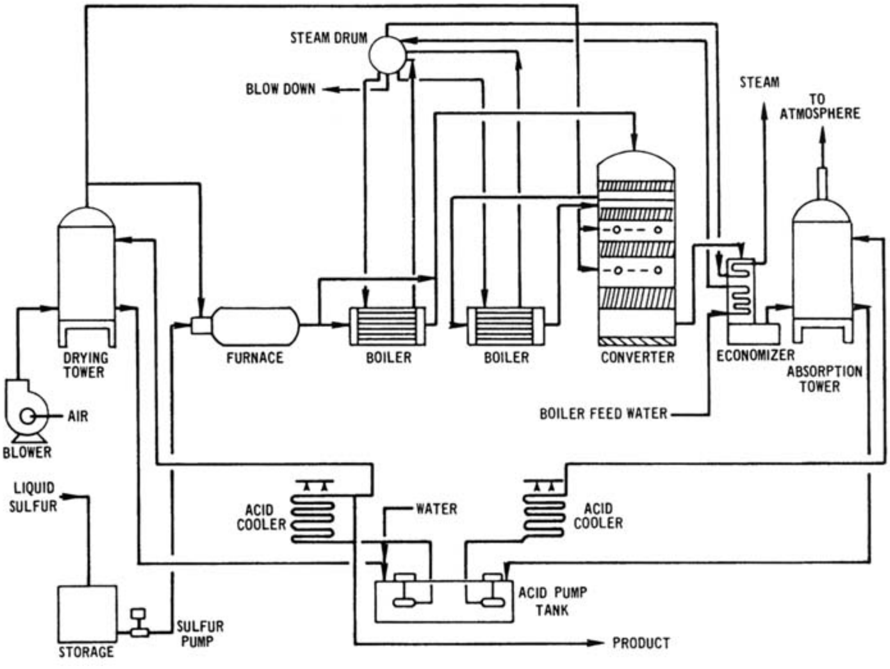

Figure 19.2 Flow diagram of a contact process sulfuric acid plant burning elemental sulfur. Source: EPA (1973a).

this process, double catalysis or interpass absorption, a stream is taken off prior to the last converter stage and conveyed directly to the absorber. This modification reduces the SO_2 concentrations in the tail gas stream to 100–300 ppm.

Significant SO_2 and SO_3 air concentrations at sulfuric acid plants are attributable to fugitive leaks and off-gas emissions; therefore, both emergency escape and reentry respiratory protective equipment must be available. The emission of ammonium vanadate or vanadium pentoxide catalyst from the contact process may present a hazard to workers.

Effective control may be achieved by maintenance of the closed process and the use of material handling techniques that minimize employee contact. Retaining dikes should be available in case holding tanks and drums are ruptured. Acid should not be stored near reducing agents because of the fire and explosion hazards. Impervious protective clothing, eye protection, and emergency showers should be available at the workplace (NIOSH, 1974a).

19.2 AMMONIA

In the early 1970s the production of ammonia consistently ranked second or third on the list of top chemicals and first in the value of product. It is produced by 80 companies in over 100 US plants. The major market for ammonia is fertilizer (80–85%), a minor market is fibers and plastic intermediates (5%), and the balance is used in explosives, metallurgy, pulp and paper, and a variety of miscellaneous applications.

A number of processes are utilized to manufacture ammonia; all are based on the catalytic formation of ammonia from hydrogen and nitrogen. A typical plant, shown in Figure 19.3, utilizes natural gas as the source of hydrogen; nitrogen is obtained from the air. After desulfurization, the natural gas is cracked over a nickel catalyst with steam at 815°C (1500°F) to produce hydrogen and CO. In a secondary reformer, the CO reacts with steam to produce hydrogen and CO_2 and the balance of the methane is cracked. The stream from the secondary reformer goes to a two stage shift converter that forms CO_2 and produces hydrogen. The converter utilizes

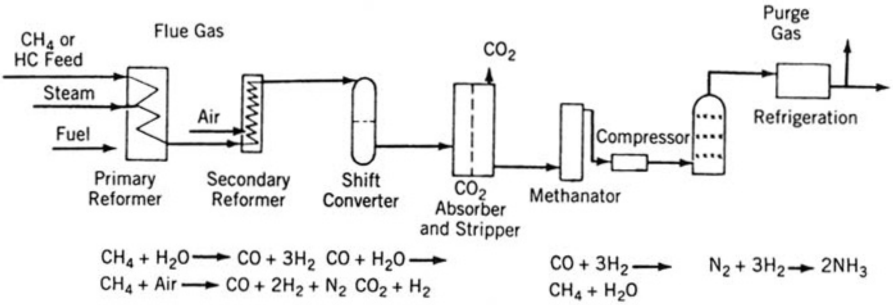

Figure 19.3 Schematic of an ammonia plant.

an iron catalyst in the first stage and a copper catalyst in the second stage. The CO_2 in the stream is removed by triethanolamine, organic solvents, or hot carbonates to form a pure hydrogen–nitrogen gas. This stream passes to the converter where hydrogen and nitrogen, in a 3:1 mole ratio, are converted to NH3.

The principal hazard in the manufacture of ammonia is a large accidental release of this very irritating gas from leaks in the piping, which result from poor maintenance. Emergency escape and rentry respiratory protection should be provided at ammonia plants. Fire and explosion hazards are a significant problem, and gas-to-air mixtures of 16–25% can cause violent explosions. Skin and eye protection must be worn where exposure may occur (ANSI, 1989; NIOSH, 1974b).

19.3 CHLORINE

Chlorine gas is manufactured by the electrolytic decomposition of sodium chloride solution (brine) in an electrolytic cell by two methods. The diaphragm cell process produces approximately three-quarters of the US supply of chlorine. In this system the electrolytic cell has a large concrete base with upward-projecting carbon or metal anodes. The steel cover is the cathode, with projecting fingers which interleave the anodes. A vacuum-formed diaphragm covers the cathode fingers. A purified sodium chloride solution is fed into the cell; chlorine is formed at the anode and bubbles to the surface where it is withdrawn from the top of the cell. The brine liquor overflow, containing approximately 11.5% NaOH and 15% NaCl, is concentrated in evaporators to 50% caustic soda. The hazards in the diaphragm cell are limited to those from accidental releases of chlorine gas and the handling of caustic soda.

The balance of the chlorine in the United States, about 25%, is produced by the second process, the mercury cell chloralkali plant. Potential exposures to chlorine still exist, but the major health hazard in this process is exposure to mercury vapor,

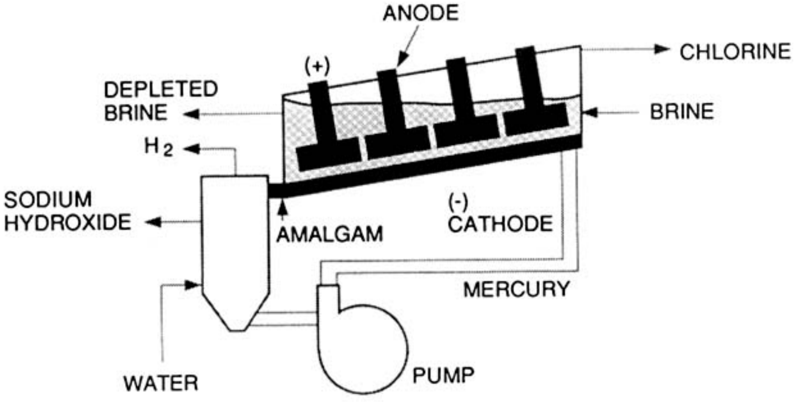

Figure 19.4 A chloralkali mercury cell. Source: Adapted from Sallsten et al. (1990).

resulting from losses of mercury in the hydrogen stream released from the decomposer and the exhaust from the end boxes of the cell. In this process, a low voltage–high amperage (84000 A) dc electrolytic cell is established with carbon- or titanium-based anodes and a flowing mercury cathode (Figure 19.4). The cell is a long steel chamber 4 ft wide, 40 ft long, and 1 ft deep, containing approximately 3 tons of mercury. It is pitched so that the mercury will flow from the inlet to the outlet box by gravity. The sodium chloride brine electrolyte is electrolytically dissociated to chlorine gas and a sodium–mercury amalgam is formed. As shown in Figure 19.5, the chlorine is collected and liquified as the final product. The sodium–mercury amalgam flows to a companion electrolytic cell called the denuder or decomposer.

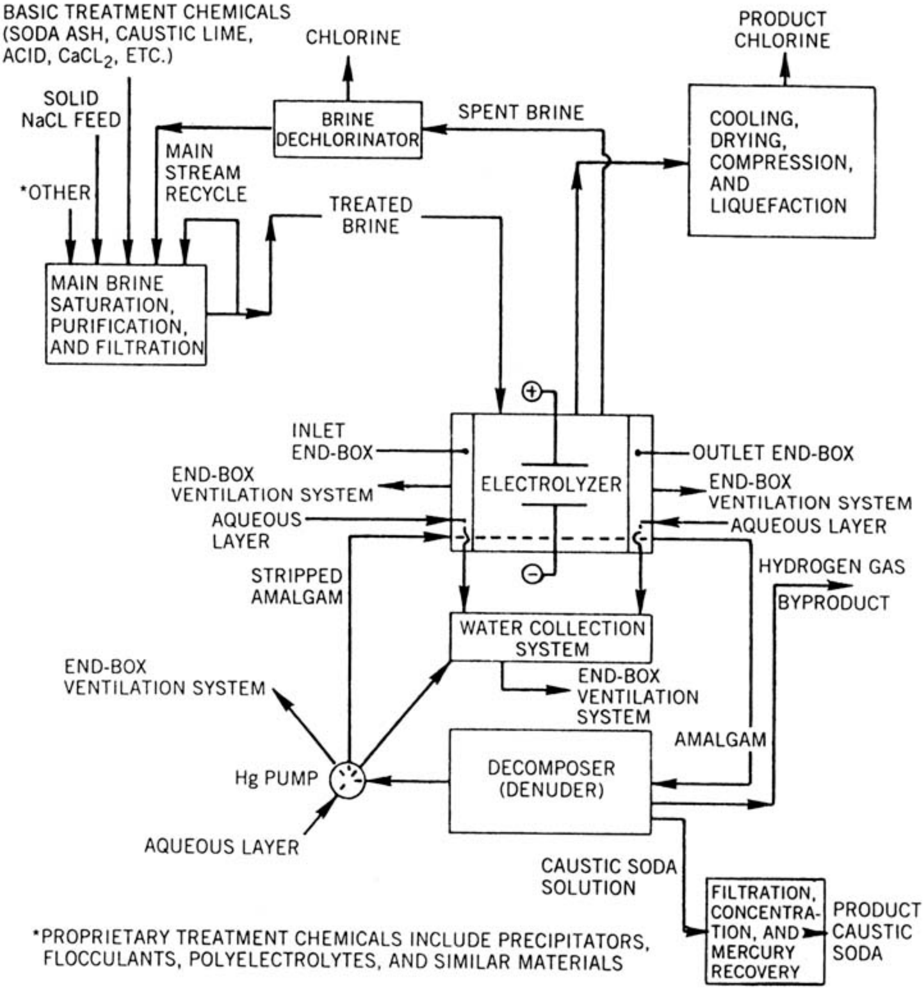

Figure 19.5 Flow diagram for a chlorine plant using chloralkali mercury cells. Source: EPA (1973b).

In the denuder, the amalgam is the anode, graphite cathodes are used, and caustic soda is the electrolyte. Hydrogen is released in this process, the sodium released from the amalgam forms caustic soda, and the denuded mercury is recirculated by pump to the electrolytic cell. The by-product, caustic soda, is frequently reacted with chlorine to form sodium hypochlorite, which has a sizable market. The stripped amalgam returns to the cell and the concentration of the depleted brine is adjusted with the treated brine stream shown in Figure 19.5.

The results of an early comprehensive study of mercury in air concentrations in chloralkali plants by Smith et al. (1970) show a wide range of exposures. The mean exposure for a population of 567 workers was 65 $\mu g/m^3$. The authors state that chlorine concentrations in the cell rooms were less than 1.0 ppm and were usually in the range of 0.1–0.3 ppm.

The principle exposures in the mercury cell system are to mercury vapor and the dust of mercury salts. The principle mercury uptake is by respiration, with 80% of the mercury vapor taken up by the blood stream in an oxidized form. Monitoring is most effectively done by passive personal samples and urinary or blood mercury samples. Sallsten et al. (1990) describes a 20-yr monitoring program of more than 1000 workers in 8 chloralkali plants in Sweden. During that period there has been a 75% reduction in urinary mercury concentration, tracking an estimated 80% reduction in mercury loss from the process to the workplace.

This impressive reduction in exposure to mercury vapor of workers in Swedish chloralkali plants, documented by both urinary and blood mercury levels over 20 years is from a blend of ventilation, changes in process, and work practices introduced in the 1970s. Sallsten et al. (1990), identified the changes that have had a major impact and provided the following practical set of guidelines for control practices in these facilities.

1. Fugitive losses of hydrogen contaminated with mercury (5 mg/m^3) were reduced by local exhaust ventilation at mercury circulating pumps and end boxes of the cells.
2. The frequent maintenance of the cells with resulting high exposure of workers was reduced by using cleaner brine solution and replacing the graphite anodes with titanium-based anodes. This measure was considered to have the greatest impact on mercury vapor concentrations in the cell room.
3. Improved cell construction materials and gasketing also reduced fugitive losses.
4. Installation of a central vacuum cleaner for spill removal and routine flushing of the floor with water reduced contamination by mercury vapor.
5. Personal hygiene was improved by frequent changes in work clothing and the use of personal protective clothing including respirators during selected maintenance operations.
6. A continuous monitoring system for mercury vapor in air was installed which permitted immediate response to spills.

Based on this history, the authors state that if apppropriate controls are put in place, chloalkali plants can be operated while maintaining mercury in air concentrations below 30 μg/m^3 and ensuring urinary mercury levels in the range of 30–40 μg/gm creatinine.

In the late 1980s NIOSH was requested to conduct a Health Hazard Evaluation at a chloralkali plant in Georgia to evaluate worker exposure to mercury, chlorine, and hydrogen chloride (NIOSH, 1991). This plant produces hydrochloric acid with burners, hence the exposures; the mercury and chlorine contaminants are associated with the operation of the chloralkali mercury cell facility. The plant produces chlorine gas, sodium hydroxide, sodium hypochlorite, and hydrochloric acid. The chlorine facility contains 50 cells with a total employment of 124. A description of this facility and the installed controls suggested that significant workplace exposure would be uncovered and this was the case. On two visits, 15 out of 40 air samples for chlorine showed concentrations exceeding the ACGIH TLV of 0.5 ppm with 6 samples above the ACGIH STEL of 1.0 ppm. In a total of 46 personal breathing zone samples for mercury in the cell room, 23 workers had concentrations greater than 50 μg/m^3. The average concentration in all cell room workers was 31.7 μg/m^3. The mean urinary mercury level in 58 workers was 140 μg/gm creatinine with one-half the workers having levels that exceeded the WHO recommended level of 50 μg/gm creatinine.

In an extension of the requested work, the investigators found that the magnetic field intensity near the control panels between the cell banks was 100–150 Gauss. A maximum level of 500 Gauss was noted at the handles near the caustic boxes. All other measurements were in the range of 20–50 Gauss. The ACGIH TLV for static magnetic fields for the whole body is 600 Gauss and 6000 Gauss for the extremities.

In the United States, environmental control on mercury chloralkali cells is achieved by the removal of the mercury from the hydrogen stream and end box leakage by condensers, scrubbing systems, and treated activated charcoal beds (EPA, 1973b). A rigorous housekeeping program has been described to reduce fugitive leaks from the mercury cell. In addition to the mercury exposure, there are safety hazards from the release of hydrogen in the chloralkali cell.

The precautions to be observed in handling chlorine have been described (NIOSH, 1974c). Skin and eye injury from caustic soda are well known and personnel should wear rubber footwear, aprons and gloves, chemical safety goggles, head protection, and tight-fitting sleeves and collar. Chlorine gas exposures may arise from blow gases from the liquefaction plant, vents from containers (during the transfer of chlorine), and process transfer tanks. Fugitive chlorine leaks also occur from pump and compressor seals, header seals, and air blowing of depleted brine in mercury cell plants.

REFERENCES

ANSI (1989), *Standard for the Handling and Storage of Anhydrous Ammonia*, ANSI K61.1-1989, American National Standard Institute, New York.

EPA (1973a), *Compilation of Air Pollutant Emission Factors*, 2nd ed., US Environmental Protection Agency, Publication No. AP-42, Research Triangle Park, NC.

EPA (1973b), *Control Techniques for Mercury Emissions from Extraction and Chloralkali Plants*, US Environmental Protection Agency, Publication No. AP-118, Research Triangle Park, NC.

NIOSH (1974a), *Criteria for a Recommended Standard—Occupational Exposure to Sulfuric Acid*, HEW Publ. No. (NIOSH) 74-128, National Institute for Occupational Safety and Health, Cincinnati OH.

NIOSH (1974b), *Criteria for A Recommended Standard—Occupational Exposure to Ammonia*, HEW Publication No. (NIOSH) 74-136, National Institute for Occupational Safety and Health, Cincinnati, OH.

NIOSH (1974c), *Criteria for a Recommended Standard—Occupational Exposure to Chlorine*, HEW Publication No. (NIOSH) 76-170, National Institute for Occupational Safety and Health, Cincinnati, OH.

NIOSH (1991), Health Hazard Evaluation Report HETA 87-402-2145, National Institute for Occupational Safety and Health, Cincinnati, OH.

Sallsten, G., Barregard, L., and Jarvholm, B. (1990), *Ann. Occup. Hyg.*, **34**, 205–214.

Smith, R. G., Vorwald, L. S., Patil, L. S., and Mooney, T. F. (1970), *Am. Ind. Hyg. Assoc. J.*, **31**, 687–700.

CHAPTER 20

Paint Manufacture

20.1 INTRODUCTION

In a review of the manufacture of paints and allied coatings, NIOSH (1984) characterized the manufacturing facilities as small job shops utilizing batch processes to manufacture more than 20,000 paint products using thousands of materials. Although that assessment was made based on 1970s data, it is still quite accurate in the 1990s. The bulk of paint products continues to be made in small facilities employing fewer than 20 persons with a market based on geography or a specialty paint product. In 1981, architectural coatings were made by 900 companies, 250 firms provided industrial finishes for original equipment manufacture, and an additional 250 companies made specialty marine paints and vehicle and high-performance maintenance finishes (NIOSH, 1981). It is estimated that there are now 80,000 paint and allied coating workers in the United States with a worldwide work population of 250,000. Although the general structure of this industry has not changed significantly, there has been a definite shift in the type of product being manufactured. Between 1976 and 1986 the market share of solvent-based paints dropped from 70 to 45%, water-based paints increased from 20 to 40% and two-part catalyzed paints increased from 10 to 15%.

The majority of the studies of health effects from paint products have been directed to the painters who use the products with little attention given the manufacturing population. However, many of the medical effects noted in painters, namely dermatitis, chronic bronchitis and asthma, neurological damage, and adverse effects of the liver, kidney, and hematopoietic system, are also seen in paint manufacturing workers (IARC, 1989).

20.2 PAINT SYSTEMS

The composition of the principal paint systems has been discussed in Chapter 15; the brief review in this chapter provides a structure for the discussion of the manufacturing operations.

20.2.1 Solvent-Based Paints

The manufacturer of a typical range of architectural paints and specialty paints may handle over 500 chemicals (Morgan, 1982). The complexity of the material inventory and handling system and the challenge of complying with environmental and workplace regulations are demonstrated in Figure 20.1. Listing the raw materials by group and selecting only the common raw materials, as does this list, tends to oversimplify the health and safety challenge in this mature but rapidly changing industry.

A summary of the resin, pigment, and solvent usage in the United States is presented in Table 20.1. Shifts in this profile have occurred in recent years owing to the conversion to water-based paints. To illustrate the type of exposure profile that will be encountered in the manufacturing plant, the formulations of several common paints are shown in Table 20.2. In viewing these formulations, one must remember that paints are usually made in batch processes with exposure during one part of the shift represented by the formulation being run that day.

20.2.2 Water-Based Paint

A description of water-based paints based on Hansen et al. (1987) is provided in Chapter 15. A useful summary of the volatile substances in these paints, and therefore the potential vapor contaminants in the manufacturing line, is shown in Table 20.3. When joined with the common pigments and fillers used in both solvent and water-based paints listed earlier in this chapter, the two lists represent the exposure potential to both vapors and dusts in the manufacture of water-based paints.

20.2.3 Powder Coatings

Four powder coating systems are now utilized, however, the popularity of powder technology will certainly result in a greatly expanded number of powder coating types. Presently, the four popular coating types are based on (1) an epoxy resin crosslinked with either a phenolic or an amine hardener such as dicyandiamide (DICY), (2) a hybrid system consisting of epoxy and polyester resins, (3) a polyester resin containing carboxyl groups cross linked with triglycidyl isocyanurate

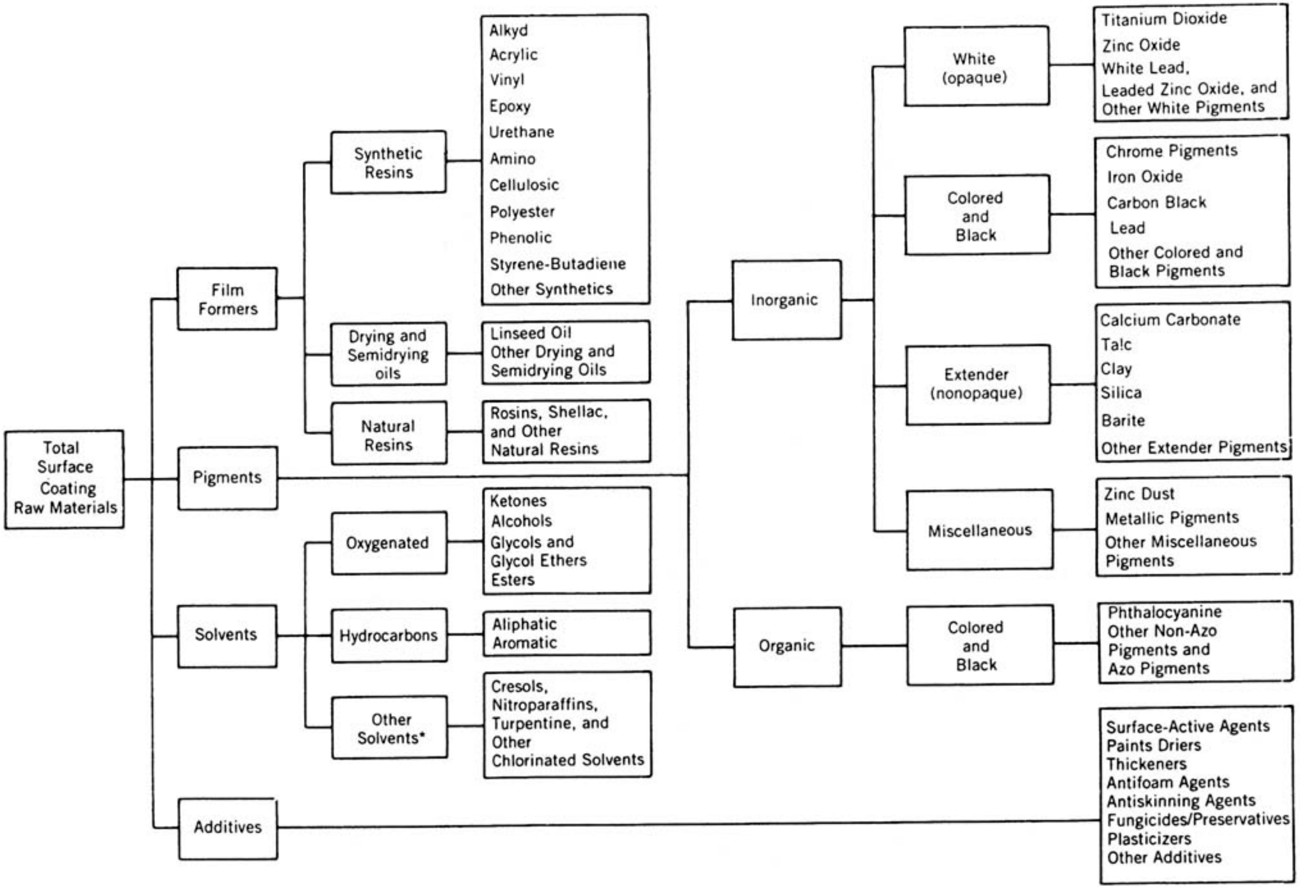

Figure 20.1 Raw materials used in the manufacture of paints and coatings. Source: NIOSH (1984).

(TGIC), and (4) a polyurethane based on a polyester containing OH groups cross linked with a caprolactam-blocked isocyanate. As noted in Chapter 15, a range of additives are used in addition to these resins and curing agents, for example, accelerators, diluents, fillers, flexibilizers, flame retardants, flow control agents, surfactants, and release agents.

20.3 MANUFACTURING PROCESS

20.3.1 Liquid Paints

As seen in Figure 20.2, the operations for both solvent- and water-based paint start with weighing out and premixing the batch ingredients. This is followed by a critical step in the formulation of the paint, dispersion of the pigment in the resin–binder system. The pigment is purchased by the paint manufacturer with close particle size specifications. However, when received in bulk at the plant, the individual pigment particles have agglomerated. The large-sized aggregates must be reduced to the ultimate pigment particle size and each particle must be wet with

TABLE 20.1 Estimated Consumption of Paint Components—Percent of Market for the Three Major Components

Resin %		Pigments %		Solvents %	
Alkyd	26.0	Titanium dioxide	30.4	Aliphatic	22.3
Acrylic	19.6	Chrome	2.6	Toluene	14.3
Vinyl	16.8	Iron oxide	4.4	Xylene	10.9
Epoxy	7.6	Carbon black	0.7	Other aromatics	4.3
Urethane	5.1	Other inorganics	0.4	Butyl alcohols	3.6
Amino	3.6	Phthalocyanine	0.2	Ethyl alcohol	4.9
Polyester	5.5	Other organic	0.6	Isopropyl alcohol	2.1
Phenolic	1.1	Aluminum	0.9	Other alcohols	1.5
Linseed	3.2			Acetone	4.6
Other	11.5	*Fillers*		Methyl ethyl ketone	7.8
		Calcium carbonate	16.5	Ethyl acetate	1.9
Total	**100.0**	Talc	10.5	Butyl acetate	3.7
		Clay	15.4	Propyl acetate	0.5
		Silica	6.4	Other ketones	3.9
		Barytes	2.6	Ethylene glycol	1.8
		Feldspar	2.7	Propylene glycol	0.7
		Other fillers	2.0	Glycol ethers	7.0
				Chlorinated solvent	1.1
		Dusts		Miscellaneous	3.1
		Zinc oxide	0.9		
		Zinc	1.9	**Total**	**100.0**
		Lead	0.4		
		Cuprous oxide	0.5		
		Total	**100.0**		

Source: Adapted from Connolly et al. (1986).

TABLE 20.2 Standard Formulations for a Variety of Paint Products

Type of Paint and Ingredients	Weight (%)
Oil-based white house paint[a]	
Titanium dioxide (anatase) Titanium dioxide (rutile)	12.7
Zinc oxide (acicular)	19.8
Water-ground mica	6.2
Magnesium silicate	23.2
Refined linseed oil	23.4
Bodied linseed oil	7.8
Mineral spirits	7.0
Acrylic latex white house paint[a]	
Titanium dioxide (rutile)	20.2
Titanium dioxide (anatase)	0.8
Water-ground mica	2.5
Magnesium silicate	8.4
Calcium carbonate	6.9
Acrylic latex	41.9
Water	7.0
Cellulosic thickener	8.0
Nonionic emulsifier	0.9
Ethylene glycol	2.1
Ammonium hydroxide	0.2
Organic mercurial fungicide	0.2
Pine oil	0.6
Other	0.4
White epoxy powder paint[b]	
Epoxy resin	60
Dicyanamide curing agent	4
2-Methylimidazole (accelerator)	1
Calcium carbonate (extender)	15
Titanium dioxide (pigment)	15
Acrylic polymer flow additive	1
Water–based white epoxy enamel[c]	
Epoxy resin emulsion (50% solids)	28.3
Polyamide resin curing agent	20.0
Titanium dioxide	22.2
Hydroxyethyl cellulose	0.1
Water	29.4
White polyurethane enamel[d]	
Hydroxyl-functional resin	21.0
Dibutyl tin dilaurate (catalyst)	<0.1
Titanium dioxide (pigment)	19.0
Aromatic hydrocarbons	6.0
Propylene glycol monomethyl ether acetate	29.0
Polyisocyanate resin (solids)	8.0
Butyl acetate	1.0
Ethyl acetate	17.0

[a] Adapted from Fisher (1987).
[b] Adapted from DuPont (1988)
[c] Adapted from Peltonen et al. (1986).
[d] Adapted from Allen (1972).

TABLE 20.3 Volatile Substances in Water-Based Paints

Substance	Content (% w/w)
Acrylic Latex Paint I, Semigloss	
Ammonia	—[a]
Texanol®	5.0[a]
Styrene	—[a,b]
Acrylic Latex Paint II, Semigloss	
Ammonia	0.05[a]
Butyl acrylate	0.03[a,b]
Ethylene glycol phenyl ether	1.7[c]
Propylene glycol	1.3[c]
Acrylic Latex Paint III, Semigloss	
Propylene glycol	0.5[a]
Styrene	—[a,b]
Butyl acrylate	—[a,b]
Texanol®	1–5[a]
Formaldehyde	0.02[d]
Ammonia	0.01[a]
Heavy-bodied Latex Wall Paint	
Butyl acrylate	—[a,b]
Styrene	—[a,b]
Propylene glycol	1–5[a]
White spirit	0.1–1[a]
Ammonia	0.04[a]
Isobutanol esters of dicarboxylic acids	0.1–1[a]
Latex Primer, Microdisperse	
Butyl acrylate	—[a,b]
Styrene	—[a,b]
Ammonia	—[a]
Latex Wall Paint	
Butyl acrylate	—[a,b]
Styrene	—[a,b]
White spirit	0.9[c]
Texanol®	0.9[c]
Ammonia	0.05[a]
Formaldehyde	0.03[d]
Sealing Waterborne Paint for Ceilings	
Butyl acrylate	—[a,b]
Styrene	—[a,b]
Triethylamine	0.5[a]
Diethylene glycol butyl ether	1.5[a]
Dipropylene glycol methyl ether	1.0[a]
Ethylene glycol butyl ether	0.4[a]
Ammonia	0.01[a]
Formaldehyde	0.02[d]

Source: Hansen et al. (1987). Reproduced with the permission of *Scandinavian Journal of Work, Environment and Health.*

[a] According to the list of ingredients.

[b] Only monomers found in the air during the work with the waterborne paints are mentioned.

[c] Determined by the Scandinavian Paint and Printing Ink Research Institute.

[d] Determined as expected contribution from formaldehyde releasers and binders.

resin to ensure dispersal in the paint system. In a solvent-based paint, the nonpolar binder covers individual particles and prevents electrostatic charge, thereby preventing flocculation. In water-based paints, however, it is necessary to add surfactants to prevent flocculation.

A critical part of the manufacturing process is to achieve a colloidal dispersion of pigment throughout the paint in such a way that each particle is wetted with the

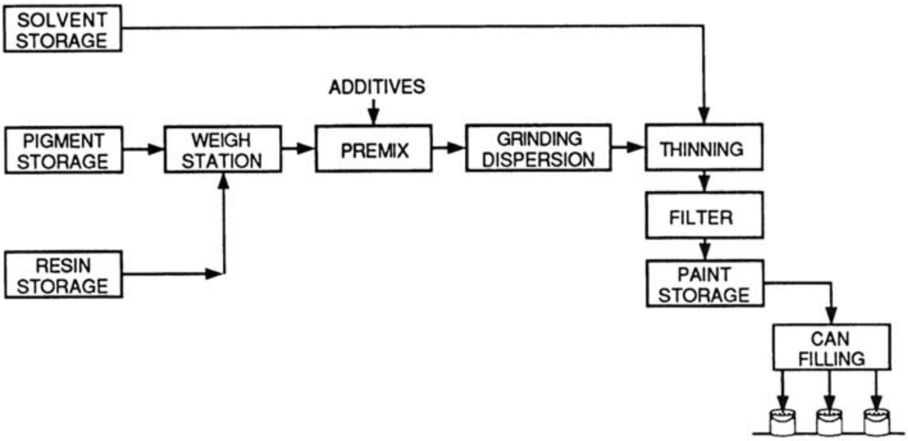

Figure 20.2 Material flow sheet for paint manufacture.

resin (Boxall and Von Fraunhofer, 1981). Frequently, surfactants are utilized to bridge the pigment particle–resin interface to ensure wetting. The dispersion process, which is called grinding in the industry, does not have any significant impact on the ultimate pigment particle size. The dispersal may be carried out via four different techniques (Figure 20.3). The ball mill is a horizontal cylinder charged with the pigment–resin system and a large number of small metal or ceramic balls. As the cylinder rotates, the round balls are raised and then fall down, crushing and shearing the pigment. A second common mill, the sand grinder, has revolving disks that provide a surface on which coarse sand shears the resin–pigment slurry. The sand mill provides a continuous output whereas the ball mill is a batch operation. Another batch process is the triple roll mill. The mixed paste of resin–pigment is fed to the hopper and undergoes initial shearing between the first and second rolls and then a final more intensive shearing takes place between the tightly spaced second and third rolls. The fourth mill is the pug mill. Two S-shaped blades rotating in opposite directions and at different speeds in adjoining troughs provide severe shearing action and effective dispersal of the pigment.

The operations described above may take 10 min to 48 hr to complete the dispersal of the pigment in the resin. When complete, the paste is thinned with resin or solvent and a subsequent run of much shorter duration is made. It is then transferred by gravity to a let-down tank where additional material is added. In solvent-based paint, the binder undergoes the dispersal operations in the sequence described above, but in a water-based system, the binder is usually added in the let-down tank. After the final thinning with solvent and filtration the material again flows by gravity to the can filling area.

The production of binders for varnish systems, a separate operation conducted in some plants, may require heating combinations of film-forming materials in reaction kettles. A technique encountered in older plants involves 100- to 400-gal open kettles. Modern kettles are large vessels equipped for close temperature control, closed transport of materials, mixing, and inerting when handling flammable thinners. The oils, resins, or monomers that are the basis for the resin are trans-

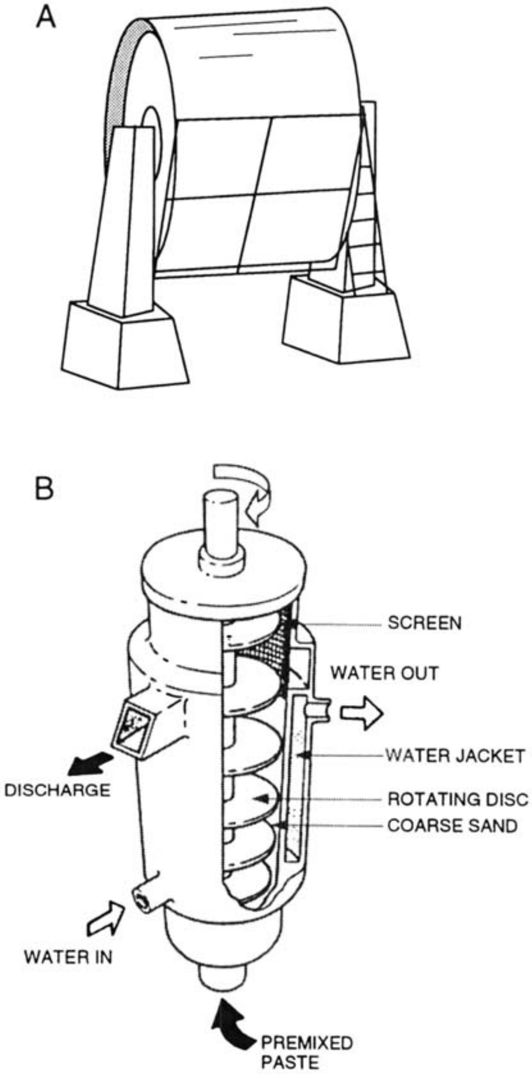

Figure 20.3 Equipment used to disperse pigment in the resin–binder system: (A) ball mill; (B) sand mill; (C) triple roll mill; (D) pug mill.

ferred manually or by pump to the kettle, which is transferred on a dolly to an exhausted heating station. After cooking at about 340°C (650°F), the batch is taken to another plant site for thinning to the desired percentage of solids. The product is filtered and used in the paint manufacturing process as described above.

20.3.2 Powder

The manufacturing process for powder coating (Figure 20.4) is quite unlike that for liquid paints. The dry, granular components of the powder (typically 40–50%

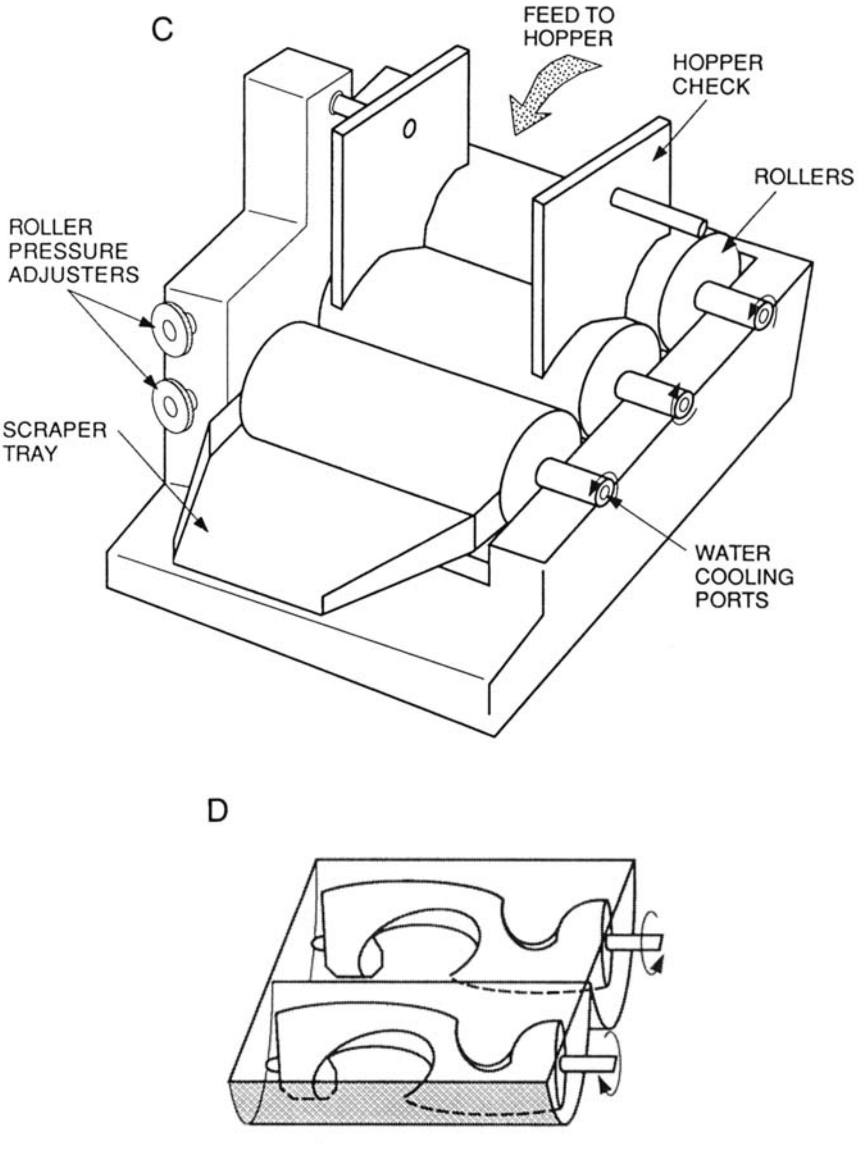

Figure 20.3 (Continued)

binder, 40–50% pigment and filler, and 1–2% additives) are preweighed from bin storage and transferred to a premixer. This operation is similar to the dry-blending operations in rubber and plastic fabrication. After mixing, the mass is transferred to a double screw extruder (see Chapter 18) where it is processed at 100–120°C (210–250°F). The molten extrudate is sheet cooled on a roll or flat conveyor belt cooler and then chipped. The large flakes are transferred pneumatically to a pulverizer to reduce the size of the particles. Subsequent sieving

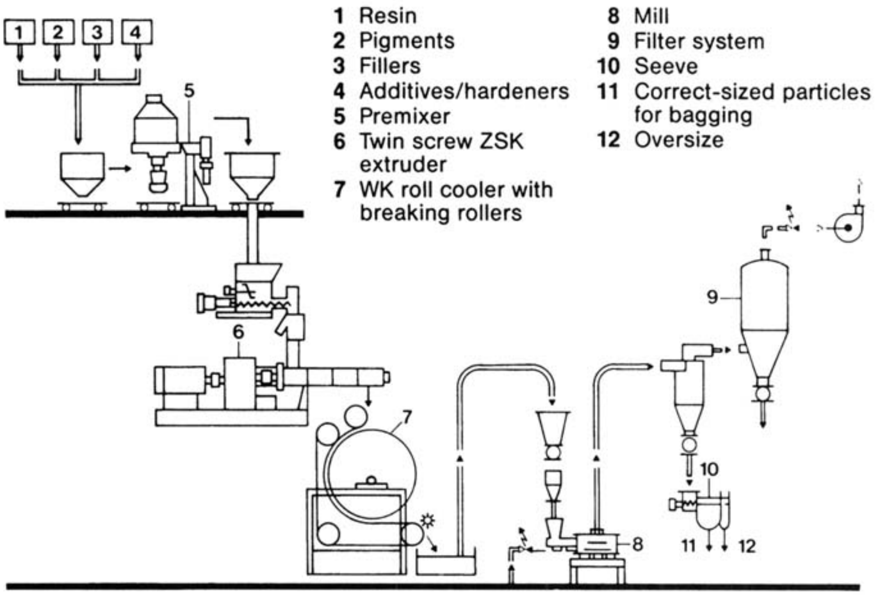

Figure 20.4 Schematic of a plant for the continuous production of coating powders. Source: Courtesy of Dow Europe.

steps are used to obtain a desired geometric mean particle size of about 50 μm (see Chapter 15). This very fine powder is then transferred pneumatically to a bagging station.

The principal exposures in powder manufacture are to the dusts of the binder, resin, hardener, and pigment. The exposures occur at the weighing and filling stations at the front end of the process, in pulverization and sieving, and during packaging of the product. The optimum control is to enclose the operations while pneumatically conveying the dusty powdered materials. Since the cost of powder coating material is high, recovery of all product is important and dust control is practiced diligently. Solvent exposures are minimal since the blend will contain not more than 1% of solvent. Frequent color changes will require that the equipment be cleaned and decontaminated between runs. This operation involves the use of solvents and may result in significant short-term exposures. The best control is to have a line committed to each of the principal colors, thereby minimizing the amount of decontamination necessary. This is, of course, not a viable option in the small plant.

20.4 EXPOSURE PROFILE

Ulfvarson (1977) has presented data on a comprehensive survey of 10 paint factories in Sweden that employ 40% of the workers in that country's paint industry. Samples were collected by personal air sampling methods where possible. The par-

TABLE 20.4 Summary of Observed Dust Concentrations

			Concentration of Components in Selected Samples[a]			
Materials[b] Charged	Number of Samples	Dust Concentration (mg/m^3)	Quartz (mg/m^3)	Fibers/ cm^3	CrO_3 (mg/m^3)	Pb (mg/m^3)
Inorganic	3	2.8–5.6		0.31(1)[b]	0.005(1)	
Inorganic	4	4–21	0.02(1)			
Organic	5	2.1–14				
Inorganic	5	10–28	0.08(1)		0.06–1.6	
Inorganic + organic	9	3.4–41	0.04(1)		0.04–0.44(2)	0.06(1)
Inorganic + organic	11	1.7–28	0.9(1)		0.2–1.5(2)	0.49–4(3)
Inorganic + organic	9	2–25	0.01(1)	1.2–1.3(2)	0.12(1)	
Inorganic	5	3.7–14		1.8–2.3(2)		
Inorganic + organic	6	1.9–40		5(1)	0.01–0.03(3)	0.006–0.007(3)
Inorganic + organic	4	7.7–70			0.003(3)	

Source: Adapted from Ulfvarson (1977).

[a] The number of such samples is given in parentheses.

[b] Pigments, extenders, and so on.

ticulate exposures included quartz, fibrous dust, hexavalent chromium, and lead. As shown in Table 20.4, hazardous concentrations were encountered in a number of locations, but principal exposures occurred in charging raw material to mixers and mills and in the manufacture of powder coatings.

Solvent concentrations were also evaluated at these plants. The air concentrations in Table 20.5 are expressed in terms of the Swedish occupational health exposure limits standards. That is, if the mean value noted is 2.0, then the mean concentration was two times the health standard. Where mixed solvents were encountered, the ACGIH technique for evaluating mixed exposure was used in the calculation utilizing short term exposure limit factors of 1.25–1.5. Again, these data indicate that significant exposures to solvents and dust occur in the Swedish paint industry. It is reasonable to assume that US facilities have comparable exposures.

In a study of 22 workers in 7 manufacturing facilities in New Zealand, exposure to a range of solvents including aromatic and aliphatic hydrocarbons, alcohols, ketones, and ethyl benzene were low and only three workers were subjected to concentrations above the local occupational exposure limits (Winchester and Madjar, 1986). Of the three workers, two were employed in factories undergoing repairs of the ventilation system and the other worker was thought to have had a nonroutine exposure. In evaluating this plant, the investigators observed that personal protective equipment was not properly used and confined space entry precautions were not observed.

TABLE 20.5 Summary of Solvent Concentrations

Operation	Number of Observations	Mean and Range of Sums of Standardization Concentrations[a]	Principal Solvents[b]
Charging solvents	33	Mean = 2.0 0.2–16	Xylene (16), mesitylene (4), toluene (4), styrene (2), butanol (9), esters, and others
Pigment dispersion (grinding, roll-milling, etc.) + emptying of vessels	18	Mean = 1.5 0.2–4.4	Xylene (13), butanol (4), and others
Tinting, thinning	14	Mean = 0.9 0.1–2.0	Xylene (11), butanol (3), and others
Can filling, paints	39	Mean = 1.3 0.02–6.6	Xylene (23), alkanes (4), butanol (7), benzene (4), toluene (6), and others
Can filling, thinners	14	Mean = 1.8 0.1–7.4	Toluene (3), xylene (5), trichloroethylene (3), esters (2), acetone (1), and others
Manual cleaning of equipment with solvents	51	Mean = 5.7 0.5–30	Xylene (33), butanol (8), toluene (13), methylene chloride (9), esters (7), and ketones (4)
Laboratory work, cleaning with solvents, spraying paints, grinding, oven drying	22	Mean = 0.9 0.06–3.0	Xylene (11), toluene (7), ethyl acetate (4), and others

Source: Adapted from Ulfvarson (1977).

[a] Standardization Concentration = observed concentration/health standard.

[b] Number of cases in which the solvent was found.

In a study of one paint manufacturing facility in the United States, historic data and limited current air sampling data were used to generate a total hydrocarbon concentration by summing the most common solvent concentrations, including toluene, xylol, other hydrocarbons, and methyl ethyl ketone (Ford et al., 1991). In the highest exposure zones, the geometric mean concentration for the mill operator was 31.2 ppm; tank/equipment cleaner, 27.2 ppm; strainer, 26.5 ppm; kettle operator, 19.6 ppm; and mixer/grinder, 18.5 ppm. The geometric standard deviations ranged from 1.9 to 2.5, values that are typically observed in this type of sampling.

In reviewing over 800 air samples analyzed for 55 contaminants from 1979 to 1984 in the paint and allied coatings industry, NIOSH (1984) identified only lead arsenate (21% of samples), inorganic lead (30% of samples), methylene chloride (14% of samples), and perchlorethylene (20% of samples) as exceeding the OSHA PEL.

The air concentration of 12 solvents in 7 Swedish paint manufacturing factories were determined by Lundberg and Hakansson (1985). The air samples were col-

TABLE 20.6 Exposure Levels (8–h TWA) to Organic Solvents of 47 Paint Manufacturing Workers

Solvent	No. Exposed	Exposure (mg/m^3)	
		Median	Range
Xylene	44	82	1–6070
Toluene	43	10	1–1260
Isobutanol	36	4	1–1040
n-Butanol	35	6	1–1540
Ethanol	33	12	1–1090
Ethyl acetate	32	26	1–767
n-Butyl acetate	31	9	1–1680
White spirits	18	44	5–74
Methyl acetate	11	13	3–169
Dichloromethane	5	719	10–2420
Methyl ethyl ketone	5	39	8–124
Isopropanol	3	129	6–258

Source: Lundberg and Hakansson (1985). Reprinted with permission of BMJ Publishing Group.

TABLE 20.7 Average Combined Organic Solvent Exposure[a] of Paint Industry Workers in Various Work Areas over Three Periods

Work Area	1976 and Later
Industrial paint section	
Mixing	0.7
Grinding	0.9
Tinting–finishing	0.6
Tapping	0.6
Cleaning of vessels	1.5
Alkyd paint section (mixing, tinting, tapping)	0.1–0.2
Small batch manufacturing	0.7
Filler manufacturing	0.1
Storage	0.1
Cellulose paint section	
Laboratory	
Product development	0.15
Control laboratory	0.4
Process engineering	0.4

Source: Orbaek et al. (1985). Reproduced with the permission of *Scandinavian Journal of Work, Environment and Health*.

[a] Sum of ratios of individual solvent levels to their occupational exposure limits; solvents considered: acetone, butanol, butylacetate, ethanol, ethyl acetate, white spirits, methyl isobutyl ketone, toluene, and xylene.

lected on 47 workers and cleaners of paint mixing equipment. The results, summarized in Table 20.6, demonstrate that a wide range of air concentrations exists embracing those who work on enclosed automatic equipment, with little chance for exposure, to the cleaners who have close contact with the solvent in confined spaces.

The results of comprehensive air sampling in one large company demonstrated the effectiveness of controls for solvent vapor in manufacturing operations with the notable exception of cleaning of vessels (Table 20.7). The data are expressed as a combined exposure index by calculating the sum of the ratios of the various exposure concentrations to the occupational exposure limits for the contaminants (Orbaek et al., 1985).

20.5 CONTROL

In these operations one must acknowledge the importance of a range of controls from substitution to use of personal protective equipment. However, the application of containment and closed pipe–duct transport of raw materials to the weighing area and the effective use of ventilation controls during weighing, batch preparation, and

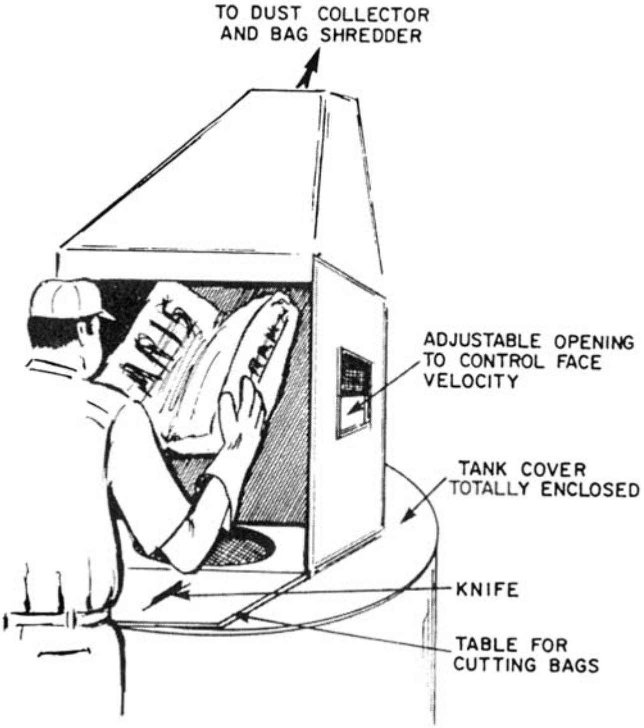

Figure 20.5 Debagging station equipped with local exhaust ventilation. Source: NIOSH (1984).

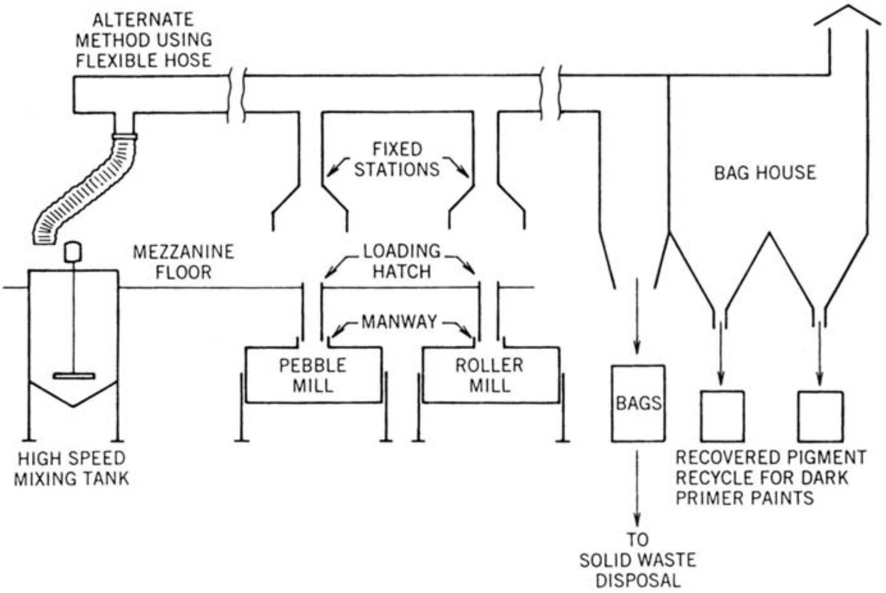

Figure 20.6 Ventilation control. Source: NIOSH (1984).

charging of the dispersion mills are of utmost importance. Although the operations are small-batch processes and do require flexibility, solutions are now available that offer effective dust and vapor control from receipt of the raw material to completion of mixing in a wet state and subsequent packaging. The observations on material transport in Chapter 16 apply equally well to paint manufacture. A chronic problem, debagging of pigments and fillers, has been resolved by the introduction of exhausted workstations (Figure 20.5). The handling of large quantities of bulk material (e.g., titanium dioxide) can be accomplished with pneumatic conveying systems with automatic weighing stations. The critical workstation in the plant for both vapor and dusts is the charging of the dispersion operations. Again, local exhaust ventilation of the general type shown in Figure 20.6 is necessary.

REFERENCES

Allen, R. A. (1972), in: *Federation Series on Coatings Technology*, W. H. Madison, Ed., Federation of Societies for Paint Technology, Philadelphia, PA, pp. 7–34.

Boxall, J. and Von Fraunhofer, J. A. (1981), *Paint Formulation*, Industrial Press, New York.

Connolly, E. M., Hughes, C. S., Myers, C. P., and Dean, J. C. (1986), *The U.S. Paint Industry: Technology, Trends, Markets, Raw Materials*, SRI International, Menlo Park, CA.

Dow Europe, *Electrostatic Powder Coating*, Technical Brochure, St. Gallen, Switzerland.

DuPont (1988), Material Safety Data Sheet—Imron Polyurethane Enamel No. 7RS, Wilmington, DE.

Fisher, E. M. (1987), in *Colliers Encyclopedia*, Vol. 18, B. Johnston, Ed., P. F. Collier, London, pp. 330–334.

Ford, D. P., Schwartz, B. S., Powell, S., Nelson, T., Keller, L., Sides, S., Aagnew, J. Bolla, K., and Bleeker, M. (1991), *Am. Ind. Hyg. Assoc. J.*, **52**, 226–234.

Hansen, M. K., Larsen, M., and Cohr, K.-H. (1987), *Scand. J. Work Environ. Health*, **13**, 473–485.

IARC (1989), *IARC Monographs on the Evaluation of Carcinogenic Risks to Humans*, Vol. 47, Occupational Exposures in Paint Manufacture and Painting, International Agency for Research on Cancer, Lyon, France.

Lundberg, I. and Hakansson, M. (1985), *Br. J. Ind. Med.*, **42**, 596–600.

Morgan, W. M. (1982), *Outlines of Paint Technology*, Vol. 1, Charles Griffin & Co., London.

NIOSH (1981), *An Evaluation of Engineeering Control Technology for Spray Painting*, DHSS (NIOSH) Publ. No. 81-121, National Institute for Occupational Safety and Health, Cincinnati, OH.

NIOSH (1984), *Recommendations for Control of Occupational Safety and Health Hazards. Manufacture of Paint and Allied Coating Products*, DHSS (NIOSH) Publ. No. 84-115, National Institute for Occupational Safety and Health, Cincinnati, OH.

Orbaek, P., Risberg, J., Rosen, I., Haeger-Aronsen, B., Hagstadius, S., Hjortsberg, U., Regnall, G., Rehnstrom, S., Svensson, K., and Welinder, H. (1985), *Scand. J. Work Environ. Health.*, **11** (Suppl. 2), 1–28.

Peltonen, K., Pfaffli, P., Itkonen, A., and Kalliokoski, P. (1986), *Am. Ind. Hyg. Assoc. J.*, **47**, 399–403.

Ulfvarson, U. (1977), in *Proceedings of an International Symposium on the Control of Air Pollution in the Working Environment*, Stockholm, 6-8 September 1977, Part II Stockholm, Swedish Work Environment Fund, International Labour Office, pp. 63–75.

Winchester, R. V. and Madjar, V. M. (1986), *Ann. Occup. Hyg.*, **30**, 307–317.

CHAPTER 21

Plastic Products

21.1 INTRODUCTION

The similarity between plastics and rubber processing equipment is striking and initially it appears possible to combine a review of health hazards from both operations in one chapter. However, the differences in the raw materials and the extended number of processing techniques available for plastics fabrication indicate that separate coverage is warranted. The toxicity of plastic additives used to modify the properties of the basic plastic resins alone warrants special attention.

This discussion does not include the manufacture of plastic polymers from chemical monomers but is limited to fabrication of various products from the plastic resin. The final polymers in resin form are, in general, inert and exhibit a low order of toxicity. The health issues that arise are related to residual monomer in the polymer, the additives used to achieve given properties for the end product, and the thermal degradation properties of the polymers.

The major plastic types in common use are classed as thermoplastics, thermosets, and elastomers. Thermoplastics are permanently fusible, that is, they will melt when heated. This is an important property since it means that defective parts and returned consumer products can be ground up and reused. Thermosetting plastics require heat and a curing agent in their processing and once cured they remain permanently infusible and therefore cannot be recycled.

Elastomers are somewhat more difficult to define and differentiate from rubber. The term "elastomer" is incorrectly used interchangeably with "rubber." The correct term is chosen depending on the ability of the material to return to its original size. Rubber returns to its shape and size after deformation quickly and forcefully, while elastomers recover, but it may be slowly and gradually. Hence rubber is an elastomer, however all elastomers are not rubbers. Many plastics, including polyurethanes, polyester copolymers, styrene copolymers, and olefinics do qualify as elastomers based on this definition. The ability of the new rubbery elastomeric plastics to recover from deformation is gained by glassy or crystalline blocks in their molecular structure rather than cross linking from vulcanization, as in the case of rubber. Since the materials are thermoplastic they can be softened with heat, reshaped in the softened state, and reused. Thermoplastic elastomers have properties similar to vulcanizable rubber, but since an energy- and time-consuming vulcanizing step is not required, they can be processed in the same manner as straight thermoplastics by injection molding, extrusion, and other high-production methods (Tijunelis and Mikes, 1988). Thus, processing these elastomers is faster and less costly than rubber, and their scrap can be recovered for reuse.

21.2 POLYMERS

There are more than 100 polymers in production and many hundreds of copolymer systems; however, the polymers listed in Table 21.1 represent the bulk of the commonly used materials. As noted earlier, the great majority of plastic resins are inert and represent little risk from exposure. However, there may be unreacted monomer in the final product and the monomer may result in significant worker

TABLE 21.1 Common Plastic Polymers

Thermoplastic resins
Polyethylene
Polypropylene
Polyvinyl chloride
Polystyrene
Acrylonitrile–butadiene-styrene
Styrene–acrylonitrile
Styrene–butadiene copolymers
Thermosetting resins
Epoxy
Polyester
Urea
Melamine
Phenolics

exposure. Residual monomer had not been given much attention until the early 1970s when angiosarcoma, a rare liver disease noted in workers manufacturing vinyl chloride polymer, was attributed to the monomer exposure. Investigation showed that the polymer used as a raw material in subsequent fabricating operations had unreacted monomer present in concentrations as high as 0.4% (Braun and Druckman, 1976). This level of contamination prompted concern about the monomer exposure of workers handling the bulk polymer in plastic fabrication operations such as injection molding. As a result of this concern, the vinyl chloride producers modified the manufacturing process to reduce the monomer concentration to less than 1 ppm, thereby eliminating significant worker exposure. Residual monomer is frequently present in concentrations up to 1% in many of the other common polymers and may warrant attention. If significant air concentrations are noted when handling the polymer, control is first directed to the removal or reduction of the monomer content in the polymer with other controls considered later if that is not adequate.

21.3 ADDITIVES

As noted by Fishbein (1984), additives act as extenders, modify the properties of the resin, facilitate processing of the polymer resin, and obtain the desired color or finish. The 14 major classes of additives are: plasticizers, flame retardants, heat stabilizers, antioxidants, UV light absorbers, blowing agents, antistatic agents, initiators, lubricants and flow control agents, curing agents, colorants, fillers and reinforcements, solvents, and optical brighteners. Fishbein (1984) states that there are nearly 2500 chemicals utilized in these additives and that the total market is approximately 3 billion pounds.

A selected number of additive classes, shown in Table 21.2, have been chosen for review based on potential health hazards and projected use. In each class the principal chemical types are listed.

21.3.1 Plasticizers

For decades dioctyl phthalate was the principal plasticizer, but since the EPA listed it as a potential carcinogen, its use has decreased approximately 4% per year. Other phthalates, including dioctyl terphthalate and diisophthalate have increased in use. A variety of nonphthalate plasticizers are available for specialty applications as noted in Table 21.2; however, the major materials are still based on phthalate compounds.

21.3.2 Flame Retardants

A wide range of compounds is used in fire retardants, as noted in Table 21.2. However, those of principal interest from an occupational health standpoint are the compounds of antimony, boron, and bromine. A major portion of the American market

TABLE 21.2 Plastic additives

Plasticizers
- Adipates
- Azelates
- Epoxy
- Phthalates
- Polyesters
- Trimellitates

Flame retardants
- Alumina hydrate
- Antimony oxide
- Boron compounds
- Bromine compounds
- Chlorinated paraffins and cycloaliphatics
- Phosphate esters

Blowing agents
- Azodicarbonamides
- Calcium stearate and rigid vinyl azodicarbonamides
- Oxybis-benzenesulfonylhydrazide

Colorants
- Inorganics
  - Titanium dioxide
  - Iron oxides
  - Cadmium
  - Chrome yellows
  - Molybdate orange
- Organics
  - Carbon black
  - Phthalo blues
  - Phthalo green
  - Organic reds
  - Organic yellows
- Dyes
  - Nigrosines
  - Oil solubles
  - Anthroquinones

Lubricants
- Fatty acid amides and esters
- Metallic stearates
- Paraffin and polyethylene waxes

is based on polybrominated diphenyloxide (PBDPO) compounds. In the European Community, the use of halogen fire retardants is being curtailed and at this time PBDPO is being replaced with other bromine-based compounds, which are more efficient and can offer the same protection in smaller quantities.

Chlorinated, brominated, and nonhalogenated phosphate esters also represent a substantial portion of the American market. Antimony continues to be used although it should be carefully controlled because of its toxicity. Fire retardants based on antimony are now available in water dispersions and pellet form to minimize dust exposure in processing. A number of combined antimony–halogen systems are also available (Wood, 1990).

21.3.3 Blowing Agents

A common mechanical blowing agent for rigid and flexible polyurethane and phenolic foams in the 1970s and 1980s was CFC 111, and its counterpart for polystyrene and polyethylene foam was CFC 112. Since these chlorofluorocarbon blowing agents face reduced production in the 1990s and cessation of production in the year 2000, there has been increased activity to find appropriate substitutes. Single hydrochlorofluorocarbons (HCFCs) and blends of these agents are now being utilized which have an ozone depletion potential as low as 2% of chlorofluorocarbons (CFCs). However, the HCFCs face a potential ban by the year 2030.

The alternates to mechanical blowing agents are the chemical blowing agents shown in Table 21.2. The principal agent now in use is an exothermic agent, azodicarbonamide, which is used alone or in conjunction with a HCFC. Azodicarbonamide has an ammoniacal odor and presents respiratory health hazards. Although it is a major blowing agent, azodicarbonamide has its limitations. A search is on for endothermic chemical blowing agents that will cool parts faster, run at a higher temperature, and out-gas quickly so that parts can be painted directly after molding. One endothermic blowing agent under development is based on a sodium salt of polycarbonic acid and carbonate compounds. Some manufacturers have designed a single-pack additive system for extruders of foam-core pipe that includes azodicarbonamide, activators, lubricants, and stabilizers. This system minimizes exposure problems and improves quality control of the product (Toensmeier, 1990).

21.3.4 Lubricants

These materials, noted in Table 21.2, are designed to improve mold flow, reduce melt viscosity, and aid fusion. In the past, stearates have been made in powder and flake form for pneumatic conveying. In the past 5 years there has been a widespread movement to provide these materials in low dusting prill or pastille form. The additional advantages of this approach are improvement in metering accuracy and reduction in waste. This general trend to low-dusting materials can also be noted in other chemical additives.

Lubricants and organotin stabilizers are now available for processors in one-pack form for manufacturers of architectural siding. The elimination of weighing and packaging at the processor's plant eliminates the potential dust exposure. In addition, it minimizes batching errors at the plant and is thereby a positive quality control measure. A future goal is packaging of the 4–5 chemical additives necessary for plastic siding extrusion in one pack.

21.3.5 Colorants

Environmental health concerns have resulted in major innovations in colorant design and usage in the last decade. In general, the workhorse pigments, including the toxic heavy metal compounds of lead, chromium, and cadmium, are being targeted for replacement by organic colorants. In the early 1990s a number of manufacturers ceased marketing pigments based on heavy metal compounds. The driving issues were environmental concerns in the United States with regard to the acceptability of recycling, incinerating, and disposing of products containing heavy metals in landfills and recent European Community initiatives banning the use of heavy metals in many products. The magnitude of this movement is seen in the statement by one manufacurer that ongoing replacement of cadmium pigments in that company will ultimately result in the reformulation of 2000 colors. Eighty percent of the 6 million pounds of cadmium used in the United States each year goes into pigments for coloring plastics.

It is obviously still necessary to exercise caution when handling the organic substitutes. One supplier warns that certain organic colorants may degrade under the high temperatures used in plastic processing techniques, forming toxic compounds. Another less attractive approach to the problem of heavy metal contamination from pigments is that taken by several manufacturers who prepare pigments such as lead chromate encapsulated in silica.

21.4 PROCESSING OF PLASTICS

21.4.1 Compression Molding

This common technique is used for molding phenolic, melamine, and urea thermosetting resins in addition to selected thermoplastics and elastomers (see Figure 21.1). The molds or dies, whose cavity represents the geometry of the parts to be molded, are mounted on heated platens in hydraulically operated presses. Molding powder, pellets, or preforms are placed in the cavity. The mold closes and preliminary heating results in resin flow and the release of various gases and vapors from the plastic. In phenolic molding this off-gassing must be momentarily vented to the atmoshere, although this is not necessary with most plastics. High pressure is then applied to the mold, completing the resin flow to the cavity, and the excess resin forms flashing. The plastic hardens, the mold is opened, and the part is ejected or manually removed from the mold. During venting and ejection of the part, the various gases and vapors released from the molding compound are vented to the workplace.

21.4.2 Injection Molding

This versatile, high-production technique is widely used for thermoplastics (see Figure 21.2). The resin, in granular or pellet form, is pneumatically conveyed from bulk silos to the feed hopper on the injection molding machine in a manner identical to that described for rubber processing (Chapter 18). The plastic is automat-

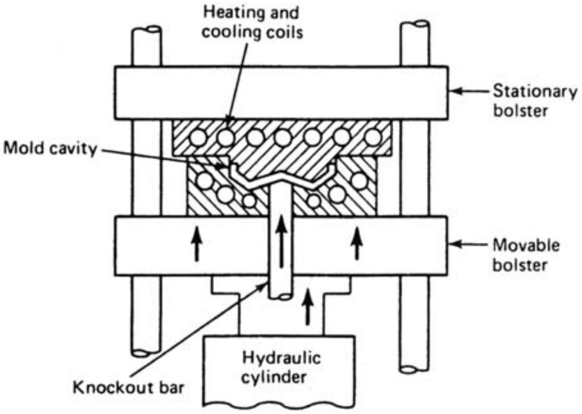

Figure 21.1 Compression molding.

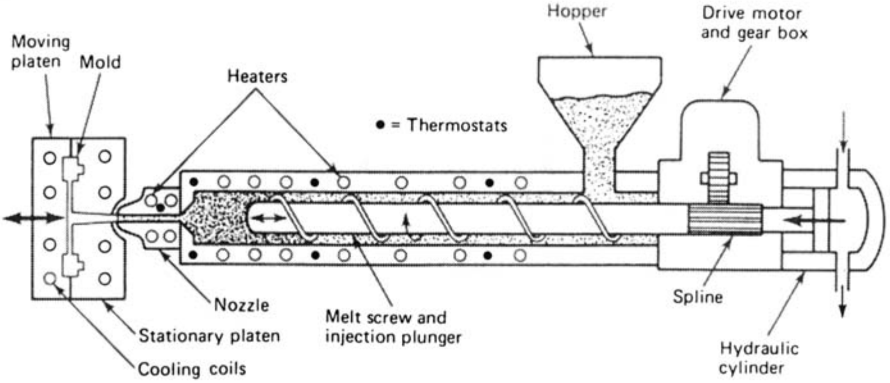

Figure 21.2 Injection molding.

ically injected into the heating zone of the screw feed on the injection machine where it can be heated to temperatures as high as 250°C (480°F). Under pressures of 200–25,000 psig the molten resin is forced into the mold cavity through a system of gates and sprues similar to that seen in foundry molds (Chapter 8). High clamping pressures are applied to the die plates to ensure that there is no blow out of the molten plastic. After the shot has filled the mold, the material cools and the clamping pressure is removed. Microprocessor-directed controls on newer equipment opens the dies, the parts are ejected, the dies close, and the process is repeated automatically. On operations with small parts this operation may be repeated twice a minute. Robotic techniques are used to pick up the ejected part and remove extraneous material including sprues, gates, and flashing. When the dies break or open there is once again a release of off gases from the plastic part and the mold, depending on the type of plastic and the operating temperature.

21.4.3 Extrusion

The extrusion process was cited in Chapter 18 in the discussion about the manufacture of tread for automobile tires. The application in plastics is almost identical to that in rubber. The technique is widely used to form rods, tubing, blown film, flat film, sheet, and papercoating and to cover wire cable. The extruder operates on the same principle as the injection molding machine shown in Figure 21.2, except that an extrusion die takes the place of the mold. The granular plastic, along with the necessary additives, is fed into a hopper on the extruder equipped with a multistage screw which sequentially feeds, compresses, and melts the plastic, and then meters it into the die. The heat to melt the plastic is provided by the heat of compression supplemented by the heated extruder barrel. The thick molten stream flows from the die to a moving conveyor, cools, and retains its shape.

The versatile, high-production extruder has been applied to several specific operations. One application is blown film extrusion, in which a tube formed at the extruder is expanded to a continuous thin bubble form by introducing air into the

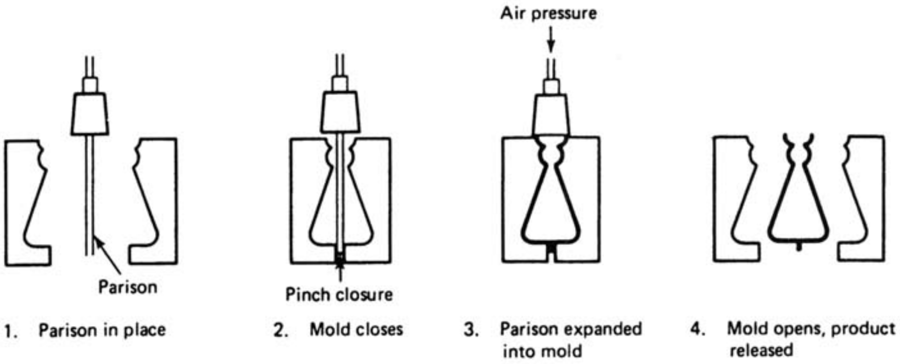

Figure 21.3 Blow molding.

center of the tube. The continuous thin film is then collapsed by light rolls and rolled up on a reel. The film can then then be cut to length and each piece sealed at one end for such applications as trash bags. Another application is the direct coating of paper using the extruder to form a flat film which is extruded directly onto the paper substrate without adhesive.

21.4.5 Blow Molding

The huge market for beverage bottles is satisfied by the blow molding process (see Figure 21.3). A section of extruded tubing (parison) is introduced into the open mold, the mold then closes and clamps the tubing section shut. Compressed air is introduced into the cavity and forces the plastic against the inside surface of the mold. The mold opens and the parts are ejected and cooled for use without additional finishing steps.

21.4.6 Plastic Foams

The fabrication of plastic foams is done by the use of a blowing agent to form the individual bubbles. The blowing agent may be water, mechanical agents such as CFCs and methylene chloride, or chemical agents in which the foaming gas is generated by the decomposition of the chemical.

21.5 HEALTH HAZARDS

Significant dust exposures may occur in the formulation of resins with the various toxic additives described above. In large shops where long runs with major resin use are routine, bulk weighing and blending is done automatically in enclosed systems with minimum dust exposure. In small operations, manual handling and blending of the additives with the resin may result in significant exposure to airborne dust. The dust control techniques described in Chapter 18 for rubber processing are applicable in this case.

The routine processing temperatures of 200–300°C (390–570°F) encountered in compression molding, injection molding, and extrusion thermally stress the plastic. If thermostatic controllers malfunction and permit temperature excursions above these ranges, thermal degradation products will be released to the workplace. What contaminants are released under these circumstances? Hydrogen chloride is released from polyvinyl chloride, styrene from polystyrene, nitrogen-containing compounds from nylon and acrylonitrile, fluoride compounds from PTFE, and cyanide compounds from urethanes. Unfortunately, the exact exposures are much more difficult to identify and it is common knowledge that dozens of chemical species are formed and released from the processing equipment.

In addition to air contaminants, the high equipment density in plastic molding rooms results in noise levels routinely exceeding 85 dBA; it is the rare plastics fabrication shop that does not require a hearing conservation program. The principal noise sources are the hydraulic pumps, motors, fans, and other ancillary equipment associated with the processing equipment. Frequently, the scrap plastic sprues and runners are ground for reuse directly at the molding machine, resulting in exposures exceeding 90 dBA. The best solution to this condition is to conduct all regrinding at a central location. The heat dumped from the molding equipment and the warm parts ejected from the machines also contribute to a heat stress problem that requires evaluation.

Until the 1980s, the majority of ultrasonic welders and degating equipment operated at 20 kHz. At this frequency the noise was not audible. This degating technique is now applied to small parts which require devices operating at frequencies up to 50 kHz and power levels of 500–1000 W. For large parts the operating frequencies are dropped to 15 kHz; at these frequencies the noise is audible and noise-reducing enclosures are necessary.

REFERENCES

Braun, P. and E. Druckerman, eds. (1976), "Public Health Rounds at the Harvard School of Public Health—Vinyl Chloride: Can the Worker Be Protected," *N.E. J. Med.*, **294**, 653–657.

Fishbein, L. (1984), in *Industrial Hazards of Plastics and Synthetic Elastomers*, J. Jarvisalo, P. Pfaffli, and H. I. Vainio, Eds. Alan Liss, New York, pp. 19–42.

Tijunelis, D. and Mikes, K. E. (1988), *Manufacturing High Technology Handbook*, Marcel Dekker, New York.

Toensmeier, P. A. (1990), *Mod. Plast.*, Sept., 99–103.

Wood, A. S. (1990), *Mod. Plast.*, Sept., 90–92.

PART SEVEN

ELECTRONICS

CHAPTER 22

Soldering in Electronics

22.1 INTRODUCTION

Soft soldering is the joining of metal by surface adhesion without melting the base metal. This technique uses a filler metal (solder) with a melting point less than 316°C (600°F); hard solder is used in the range of 316 to 427°C (600–800°F). These temperature ranges differentiate soldering from brazing, which utilizes a filler metal with a melting point greater than 427°C (800°F). To understand the potential health hazards from soldering operations, one must be familiar with the composition of the solder and fluxes in use and the applicable production techniques.

22.2 FLUX

All metals, including the noble metals, have a film of tarnish that must be removed to effectively wet the metal with solder and accomplish a good mechanical bond. The tarnish takes the form of oxides, sulfides, carbonates, and other corrosion products. The flux, which may be a solid, liquid, or gas, is designed to remove any adsorbed gases and tarnish from the surface of the base metal and keep it clean until the solder is applied. The molten solder displaces the residual flux and wets the base metal to accomplish the bond.

Diverse organic and inorganic materials are used in the design of soldering fluxes, as shown in Table 22.1. The flux is usually a corrosive cleaner frequently used with a volatile solvent or vehicle. Rosin, which is a common base for

TABLE 22.1 Common Flux Materials

Type	Typical Fluxes	Vehicle
	Inorganic	
Acids	Hydrochloric, hydrofluoric, orthophosphoric	Water, petroleum paste
Salts	Zinc chloride, ammonium chloride, tin chloride	Water, petroleum paste, polyethylene glycol
Gases	Hydrogen forming gas; dry HCl	None
	Organic; Nonrosin Base	
Acids	Lactic, oleic, stearic, glutamic, phthalic	Water, organic solvents, petrolatum paste, polyethylene glycol
Halogens	Aniline hydrochloride glutamic acid hydrochloride, bromide derivatives of palmitic acid, hydrazine hydrochloride or hydrobromide	Water, organic solvents polyethylene glycol
Amines and amides	Urea, ethylenediamine, mono- and triethanolamine	Water, organic solvents petrolatum paste, polyethylene glycol
	Organic: Rosin Base	
Superactivated	Rosin or resin with strong activators	Alcohols, organic solvents, glycols
Activated (RA)	Rosin or resin with activator	Alcohols, organic solvents, glycols
Midly activated (RMA)	Rosin with activator	Alcohols, organic solvents, glycols
Nonactivated (water-white rosin) (R)	Rosin only	Alcohols, organic solvents, glycols

Source: From *Solders and Soldering* by H. H. Manko. Copyright 1979. Used with permission of McGraw-Hill Co.

organic fluxes, contains abietic acid as the active material. Manko (1979) has described the performance of this flux on a copper base metal that has an oxidized surface. When the flux is applied, the surface oxide reacts with the abietic acid to form copper-abiet. The copper-abiet mixes with the unreacted rosin on the now untarnished surface of the base metal. When the molten solder is applied, it displaces the copper-abiet and the unreacted rosin to reveal the clean metal surface, thereby ensuring a good bond. Activated rosin flux, formulated by adding an organic chloride compound to the base rosin–alcohol liquid flux, provides active corrosive cleaning. The three major flux bases are inorganic, organic-nonrosin, and organic-rosin, as shown in Table 22.1. A given flux may contain several of these materials. The inorganic fluxes may be based on any of the acids commonly used for etch baths in electroplating operations. The inorganic salts, such as zinc chloride, react with water to form hydrochloric acid, which converts the base metal oxide to a chloride. The metal chloride is water soluble and can be removed easily by a water rinse to provide an untarnished surface for soldering. A combination of salts is frequently used to achieve a flux with a melting point below that of the solder so that no flux residual will be left on the part. The last inorganic technique utilizes hot hydrogen or hydrogen chloride gas, which sweeps over the base metal, reducing the oxide.

The second class of materials shown in Table 22.1, organic nonrosin, is less corrosive and therefore slower acting. In general, these fluxes do not present as severe a handling hazard as the inorganic acids. This is not true of the organic halides, whose degradation products are very corrosive and warrant careful handling and ventilation control. The amines and amides in this second class of flux materials are common ingredients whose degradation products are very corrosive.

The rosin base fluxes listed in Table 22.1 are inactive at room temperature, but at soldering temperature they are activated to remove tarnish. This material was and still is a popular flux compound since the residual material is chemically and electrically benign and need not be removed as vigorously as the residual products of the corrosive fluxes.

The cleaning of the soldered parts may range from a simple hot water or detergent rinse to a degreasing technique using a range of organic solvents. These cleaning techniques may require local exhaust ventilation.

22.3 SOLDER

The most common solder contains 65% tin and 35% lead. Traces of other metals, including bismuth, copper, iron, aluminum, zinc, and arsenic, are present. Several special solders contain antimony in concentrations up to 5%. The melting point of these solders is quite low, and at these temperatures the vapor pressure of lead and antimony usually do not result in significant air concentrations of metal fume. The composition of the common industrial solders is shown in Table 22.2.

22.4 APPLICATION TECHNIQUES

Soldering is a fastening technique used in a wide range of products from simple mechanical assemblies to complex electronic systems. The process includes (1) cleaning the base metal and other components, (2) fluxing, (3) soldering, and (4) postsoldering cleaning.

22.4.1 Initial Cleaning of Base Metal

Prior to fluxing and soldering, the base metal must be cleaned to remove oil, grease, wax, and other surface debris. Unless this is done, the flux will not be able to attack and remove the metal surface tarnish. The procedures used in metal

TABLE 22.2 Typical Solder Compositions

ASTM Classification	Composition (wt. %)				Temperature (°F)		
					Solidus	Liquidos	Pasty Range
		Tin	**Lead**				
5A		5	95		578	594	36
10A		10	90		514	573	59
15A		15	85		437	553	116
20A		20	80		361	535	174
25A		25	75		361	511	150
30A		30	70		361	491	130
35A		35	65		361	477	116
40A		40	60		361	455	94
45A		45	55		361	441	80
50A		50	50		361	421	60
60A		60	40		361	374	13
70A		70	30		361	373	17
	Tin	**Antimony**	**Lead**				
20C	20	1.0	79.0		363	517	154
25C	25	1.3	73.7		364	504	140
30C	30	1.6	68.4		364	482	118
35C	35	1.8	63.2		365	470	105
40C	40	2.0	58.0		365	448	83
95TA	95	5.0	58.0		452	464	12
	Lead	**Silver**	**Tin**				
2.5S	97.5	2.5	—		579	579	0
5.5S	94.5	5.5	—		579	689	110
1.5S	97.5	1.5	1.0		588	588	0
		Tin	**Silver**				
		96.5	3.5		430	430	0
		95	5		430	473	43
		Tin	**Zinc**				
		91	9		390	390	0
		80	20		390	518	128
		70	30		390	592	202
		60	40		390	645	255
		30	70		390	708	318
		Cadmium	**Zinc**				
		82.5	17.5		509	509	0
		Cadmium	**Zinc**				
		40	60		509	635	126
		10	90		509	751	241
Tin	**Indium**	**Bismuth**	**Lead**	**Cadmium**			
8.3	19.1	44.7	22.6	5.3	117	117	0
12	21	49	18	—	136	136	0
12.8	4	48	25.6	9.6	142	149	7
50	50	—	—	—	243	257	14
—	50	—	50	—	356	408	52

cleaning, reviewed in Chapter 5, include cold solvent, vapor, and ultrasonic degreasing. If the base metal has been heat treated, the resulting surface scale must be removed by one of the procedures described in Chapter 2. In many cases mild abrasive blasting techniques are utilized to remove heavy tarnish before fluxing. In electrical soldering, the insulation on the wire must be stripped back to permit soldering. Stripping is accomplished by mechanical techniques using cutters or wire brushes, chemical strippers, or thermal methods. Mechanical stripping of asbestos-based insulation obviously presents a potential health hazard and this operation must be controlled by local exhaust ventilation. The hazard from chemical stripping depends on the chemical used to strip the insulation; however, at a minimum, the stripper will be a very corrosive agent. Thermal stripping of wire at high production rates may present a problem due to the thermal degradation products of the insulation. Hot-wire stripping of fluorocarbon insulation such as Teflon R and Terzel R may cause polymer fume fever if sufficient exhaust ventilation is not provided. Other plastic insulation, such as PVC (polyvinyl chloride), may produce irritating and toxic thermal degradation products. A summary of the common stripping techniques for various insulation materials is shown in Table 22.3.

22.4.2 Fluxing Operations

Proprietary fluxes are available in solid, paste, and liquid form for various applications and may be cut with volatile vehicles such as alcohols to vary their viscosity. The flux may be applied by one of the 10 techniques shown in Table 22.4,

TABLE 22.3 Wire Insulation-Stripping Methods[a]

Insulation Material	Mechanical	Thermal	Chemical
Asbestos	1	3	3
Cloth	1	2x	3
Natural rubber	1	2x	3
Neoprene	1	2x	3
Nylon	1	2x	3
Paper	1	2x	3
Polyurethane	2	1	1
PVC (polyvinyl chloride)	1	2x	3
Rolan[b]	1	3	3
Silicon rubber	1	3	3
Solder Eaze[b]	2	1	2
Teflon[b,c]	1	1	3
Varnish	2	1	1

Source: From *Solders and Soldering* by H. H. Manko. Copyright 1979. Used with permission of McGraw-Hill Book Co.

[a] 1 = normally used; 2 = used only under special conditions; 3 = not normally used; x = used mostly to separate unwanted sleeve from desired part of insulation; the rest of the strip is mechanical.

[b] Trade name.

[c] Provide adequate ventilation for thermal strip.

TABLE 22.4 Flux Application

Method	Application Technique	Use	Solid	Paste	Liquid
Brushing	Applied manually by paint, acid, or rotary brushes	Copper pipe, job shop, PCB, large structural parts		X	X
Rolling	Paint roller application	Precision soldering, PCB, suitable for automation		X	X
Spraying	Spray painting equipment	Automatic soldering operations, not effective for selective application			X
Rotary screen	Liquid flux picked up by screen and air directs it to part	PCB application			X
Foaming	Work passes over air-agitated foam at surface of flux tank	Selective fluxing, automatic PCB lines			X
Dipping	Simple dip tank	Wide application for manual and automatic operations on all parts		X	X
Wave	Liquid flux pumped through trough forming wave through which work is dipped	High speed, automated operation			X
Floating	Solid flux on surface melts providing liquid layer	Tinning of wire and strips of material	X		
Cored solder	Flux inside solder wire melts, flows to surface, and fluxes before solder melts	Wide range of manual operations	X	X	X
Solder paste	Solder blended with flux Applied manually	Component and hybrid microelectric soldering		X	

Source: From *Solders and Soldering* by H. H. Manko. Copyright 1979. Used with permission of McGraw-Hill Book Co.

depending on the component and the production rate. Since one is handling a corrosive chemical, skin contact must be minimized by specific work practices and good housekeeping. The two techniques that utilize spray application of the flux require local exhaust ventilation to prevent air contamination from the flux mist.

22.4.3 Soldering and Cleaning

In two of the fluxing techniques listed in Table 22.4 the flux and solder are applied together. One must merely apply the necessary heat to bring the system first to the melting point of the flux and then to the melting point of the solder. In most applications, however, the flux and solder are applied separately, although the two operations may be closely integrated and frequently completed in a continuous operation.

The soldering techniques used for most manual soldering operations on parts that have been fluxed are the soldering iron and the solder pot techniques. A number of variations of the solder pot have been introduced to handle high-production soldering of printed wiring boards (PWBs) in the electronics industry. In the drag solder technique, the PWB is positioned horizontally and pulled along the surface of a shallow molten solder bath behind a skimmer plate that removes the dross. This process is usually integrated with a cleaning and fluxing station in a single automated unit. Another system designed for automation is wave soldering. In this technique a standing wave is formed by pumping the solder through a spout. Again, the conveyorized PWBs are pulled through the flowing solder. The application of reflow soldering continues to expand. In this process the components are precoated with solder, parts are assembled or positioned in place, and resistance, induction, infrared, or vapor phase heating causes the solder to melt and reflow. Precise reflow soldering can be effected with lasers or a hot bar with an application width as small as 0.020 in.

Simple lead–tin soldering operations at controlled working temperatures typically do not generate significant lead fume concentrations. In both manual and automated soldering applications, lead exposures are far below the TLV. The use of activated rosin fluxing agents may result in the release of thermal degradation products that require control by local exhaust ventilation. OSHA has established a PEL of 0.1 mg/m^3 for rosin core pyrolysis products measured as formaldehyde. The handling of solder dross during cleanup and maintenance may result in exposure to lead dust.

Furnace soldering is used widely for the assembly of semiconductors. The parts are positioned in a holding jig and flux and solder preforms are positioned at the soldering locations. Parts are processed by batch or continuous furnace operations. Since small quantities of flux and solder are used at closely regulated furnace temperatures, there is no significant health hazard from this operation. In another operation, the parts are prefluxed and solder preforms are processed through a fluorocarbon vapor phase unit, which brings the assembly up to a precise temperature in a gradual fashion without undue thermal stress to the part. As in the case of the vapor degreaser, the condenser and freeboard ensure minimal release of the fluorocarbon to the workplace, but this should be evaluated.

After soldering operations are carried out, some flux residue and its degradation products remain on the base metal. Both water- and solvent-soluble materials normally exist, so it is necessary to clean with two systems, using detergents and saponifiers in one case and common solvents in the other. The processing equipment may include ultrasonic cleaners and vapor degreasers.

22.5 CONTROLS

Until 1990 the electronics industry had relied on chlorinated hydrocarbons, chlorofluorocarbons (CFC), and hydrofluorocarbons (HFC) for critical cleaning of PWB components assembled with solder. The banning of ozone-depleting chemicals discussed in Chapter 5 and the desire of companies to fulfill toxic use reduction commitments resulted in major shift in processes and materials in all facets of electronic manufacturing including soldering.

The steps taken by one manufacturer of electronic components in New England reflects the vitality of this movement (Collipi et al., 1991). The conventional fluxes used by this company required extensive cleaning with Freon TMC, trichloroethylene, isopropanol, and detergents to remove flux residue and prevent the subsequent corrosion of the electrical junction. This cleaning step was eliminated by converting to low solids and synthetic fluxes. Where conventional flux must still be used the cleaning is achieved with dry ice pellets (see Chapter 3).

In the soldering of surface mounted electrical components this company replaced the conventional solder form with a water-soluble solder paste thereby eliminating a number of solvents used in subsequent cleaning. In those cases where cleaning was still required, the previously used solvents including CFCs were replaced with isopropanol, an ethanolamine-based detergent, and D-limonene (see Chapter 5.

Since soft soldering is conducted at low temperature there is little hazard of significant lead exposures. The principle air contaminants arise from the particulate rosin acids and the gaseous pyrolysis products of the flux (Dalrymple, 1986). In the UK rosin fume exposure is estimated by measuring the concentration of aliphatic aldehydes in the air expressed in terms of formaldehyde which gives the same response in a specific analytical system. Dalrymple recommends that particulate rosin acids and gaseous pyrolysis products be measured simultaneously. Until the 1970s the airborne contaminants from rosin flux were considered simple irritants, however, Dalrymple cites a series of papers that attribute occupational asthma to rosin fume. A number of exhaust ventilation designs are available for control of flux fume from soldering operations at fixed work locations. Dalrymple offers a unique high velocity-low volume design for pencil-type soldering irons.

REFERENCES

AWS (1959), *Soldering Manual,* American Welding Society, Miami, FL.

Collipi, R. V., Grillo, R. V., Veneetta, A. M., Twining, R. G., and Grillo, G. P. (1991), *SSA Journal,* Sept. 21–23.

Dalrymple, H. L. (1985). "Development and Use of a Local Exhaust Ventilation System to Control Fume From Hand Held Soldering Irons," in *Ventilation '85, Proceedings of the First International Symposium on Ventilation for Containment Control,* October 1–3, Toronto, Canada, pp. 593–601.

Manko, H. H. (1979), *Solders and Soldering,* McGraw-Hill, New York.

CHAPTER 23

Microelectronics

23.1 INTRODUCTION

The semiconductor industry in the United States employs 225,000–275,000 workers in approximately 800 facilities. Of this total number, approximately 30,000 work in the fabrication areas. The work population peaked in 1985 and there has been a reduction in employment since that time. Unlike conventional electronic manufacturing, the processes are a combination of coating, chemical, and photographic technologies set in a nearly dust-free room. Through an ingenious technique, the semiconductor industry fabricates electrical circuits by building layers of insulation, conduction, and semiconduction on a substrate, most commonly silicon (Van Zant, 1990). For each layer, a pattern must be put on the silicon wafer before the layer is added. This pattern must be removed after the layer is added. The choice of silicon as the substrate was based on the ease of oxidizing the silicon surface to form the oxide insulating layer. Additionally, since the oxide has the same index of expansion as the silicon, it can withstand high-temperature furnace environments without warping. Appropriate contaminants or dopants can also diffuse into the silicon to modify its conductivity and provide both conducting and semiconducting layers. Silicon wafers in diameters up to 10 in. are available ground optically flat to a thickness of 0.07 mm. A total of 150 integrated circuits can be placed on a 6-in. wafer; however, the "good" yield from this number may only be 60–80%.

Although of low intensity, fabrication (fab) workers are exposed to chemical, ionizing and nonionizing radiation, and ergonomic stresses (NIOSH, 1985). The chemical exposures include dopants based on phosphorous, arsenic, and boron compounds, solvent and resist systems in photolithography, and organic compounds and acids in etching. The physical hazards include soft X ray, low-frequency electromagnetic and magnetic fields, and radiofrequency exposures. Although the air concentrations of chemicals are low compared to conventional industry (routinely less than 10% of the occupational exposure limits), an epidemiologic study in the 1980s (Pastides et al., 1988) suggested the possibility of adverse reproductive effects in women fab workers and that glycol ethers used in the developing step may be the causal agent. A subsequent industry-wide study confirmed that work in semiconductor fabrication facilities was associated with an increased rate of spontaneous abortion (Schenker, 1992).

23.2 SEMICONDUCTOR FABRICATION PROCESS

The major steps in the manufacture of hundreds of integrated circuits on one wafer are shown in Figure 23.1. The silicon wafer surface is oxidized to form the first insulating layer. A photoresist polymer film is placed on the surface. The surface is irradiated with UV light through a photomask which defines the geometry of the circuit elements. In a negative photoresist system the UV radiation cross links the polymer and causes it to form a hard, smooth image of the projected pattern. The portions of the photoresist blocked by the photomask from UV radiation are softened with a developer and washed off the surface, revealing the silicon dioxide surface of the wafer. The oxide layer at these locations is then removed from the wafer surface with a chemical or dry etch to expose the silicon surface. These exposed silicon areas can then be modified to define unique electrical characteristics or junctions by adding contaminants or dopants to the silicon using diffusion or ion implantation. The remaining cross-linked photoresist, which covers the balance of the wafer, is then removed by chemical or plasma etching. The completed layer is then covered with a silicon oxide coating to insulate that layer of the circuitry. This series of steps, which is called photolithography, photomasking, or patterning, is repeated time after time, with an insulating coating of silicon oxide placed over each layer of circuitry (Figure 23.2). Electrical connection of the layers is accomplished by providing small interlayer openings and connecting them not with wire, as in conventional electronics, but by laying down a conductive metal film with a metallizing process. When the wafer is completed and the electrical characteristics of the chips on the wafer are tested, the wafer is cut into the individual die or chips for mounting in a sealed envelope or package.

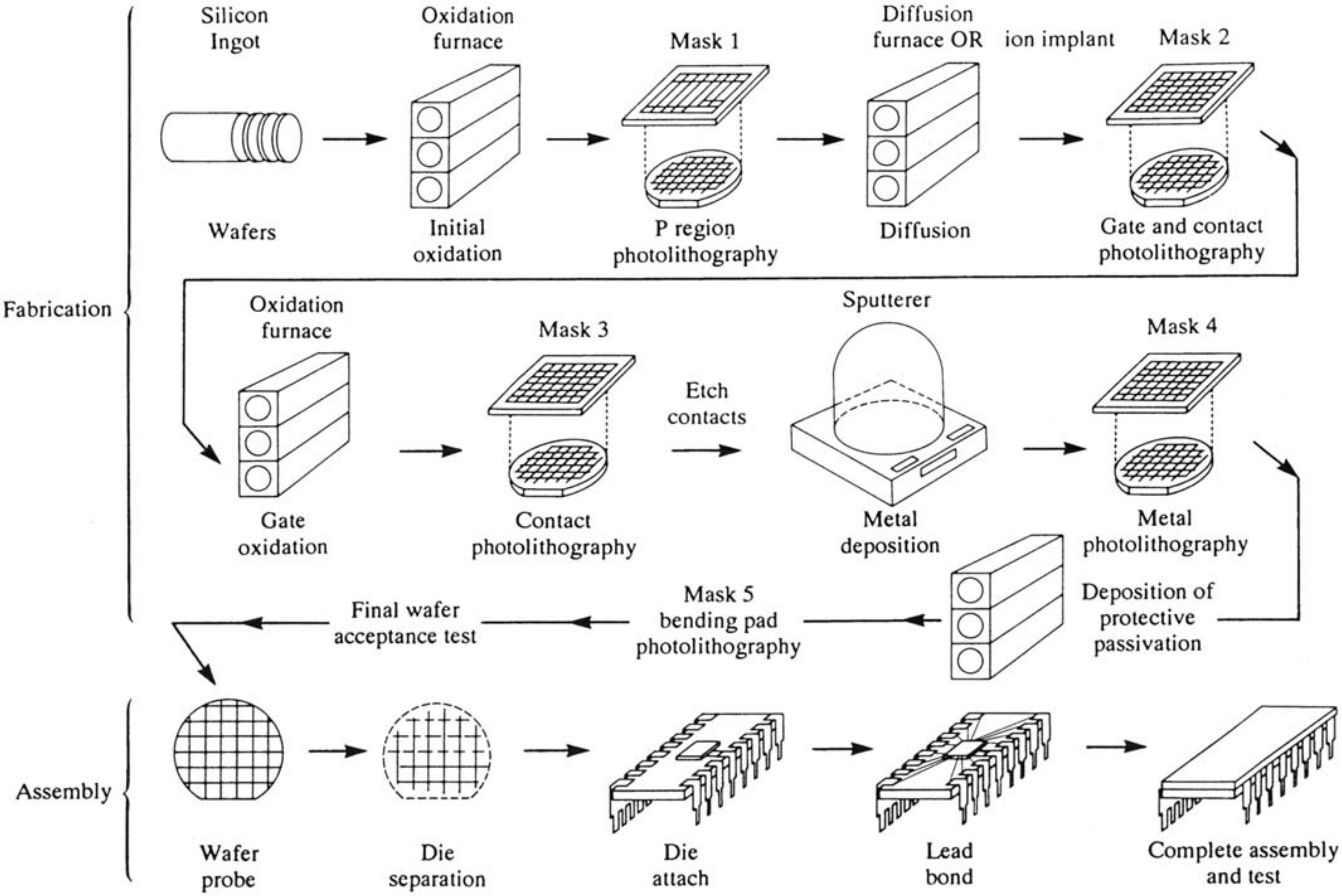

Figure 23.1 Flow diagram of semiconductor operations.

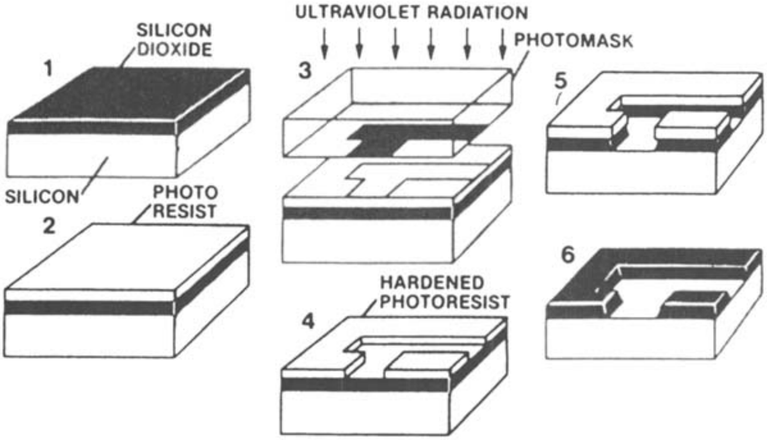

Figure 23.2 A schematic of a positive photolithographic process. (1) The surface of the silicon wafer is oxidized and (2) a positive resist is applied to the surface. (3) A photomask or microstencil with the open area shown in black is positioned over the wafer. The UV light irradiates the exposed area of the photoresist and softens it. (4) The balance of the wafer surface shielded from the UV light by the stencil is hardened. (5) Treatment of the surface of the wafer with a developer such as potassium or sodium hydroxide removes the softened photoresist and the silicon dioxide layer is etched away revealing the silicon substrate with the precise geometry defined for diffusion or implantation of dopants. (6) The hardened photoresist covering the balance of the wafer surface is removed chemically to uncover the silicon dioxide surface. Source: Courtesy of Technomic Publishing Co., Lancaster, PA.

23.3 OPERATIONS AND TOOLS

23.3.1 Wafer Cleaning

The first active step in the production of semiconductors is oxidation of the silicon surface. To accomplish this, the wafer must be meticulously clean. It is first etched in hydrofluoric, sulfuric, hydrochloric, nitric, or chromic acid. The wafer is then rinsed in deionized water and cleaned with an ultraclean solvent. Until recently the solvents were chlorinated hydrocarbons or CFCs. However, because these solvent are being phased out, pursuant to the Montreal Agreement, a variety of other solvents are now in use. The etching and the various cleaning rinses are done at wet benches, a term used in the semiconductor industry to describe a workstation for processing wafers in small baths or tanks, as shown in Figure 23.3 (see Section 23.4.3). The operations may be done manually, or in a high-production operation, a robotic transfer system may be used to move the wafers from one tank to another.

Data from over 1500 area and personal air samples reflecting fab and nonfab operations have been compiled by the Semiconductor Industries Association (Scarpace et al., 1989) and have demonstrated very low concentrations of solvent vapors from cleaning wafers.

23.3.2 Initial Oxidation

The conversion of the silicon wafer surface to a silicon dioxide surface is initially carried out after cleaning and repeated after each junction step (e.g., after doping the silicon). A number of techniques are used in the wafer oxidation process, but all include placing the wafers in special atmospheres in high-temperature furnaces. The wafers are loaded in refractory boats or holders and placed in a quartz furnace operating at 800–1000°C in either a steam or oxygen environment. The most common technique continues to be the use of steam at high temperatures in a tube furnace. Other approaches to provide the oxide layer include the decomposition of silane or other silicon-based compounds or the use of a plasma containing oxygen. Although the health hazards in the oxidation process operation are limited, Stewart (1989) reminded the semiconductor community of the explosion hazard from hydrogen.

23.3.3 Application of Photoresist

The process of defining selected portions of the wafer for treatment is called patterning, photomasking, or photolithography. It includes the sequence of photoresist coating, exposure, developing, hard bake, etch, strip, and clean. These steps are critical since poor quality chips may result from surface contamination and poor alignment during the photolithography sequence.

The photoresist is applied in an automatic system which takes a wafer from the cassette, positions it on a vacuum chuck, applies the photoresist, and spins the wafer to distribute the liquid photoresist evenly at an optimum thickness. The wafer is then heated to evaporate the residual solvent and cure the resin system to obtain a thin, hard film. A photomask (microstencil) is aligned on the wafer and the photoresist surface is exposed to UV light from a high-pressure mercury lamp, as shown in Figure 23.2. (The alignment process uses a benchmark established on the wafer so that all subsequent positioning and layering will be precise.)

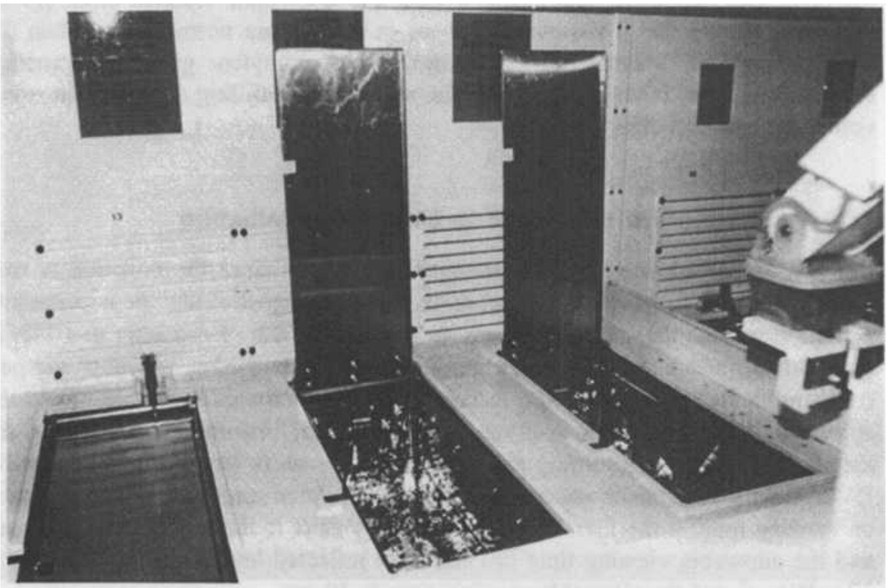

Figure 23.3 Wet bench in a fab with lateral slot exhaust and rear plenum exhaust.

The photoresist application process has caused occupational health concerns since a commonly used positive photoresist solvent, ethylene glycol monomethyl ether, was recognized as a potential reproductive hazard in the 1980s. Recently this solvent was replaced in the process. In addition, photoresist coaters routinely complain of the offensive odor of negative photoresist solvents, including xylene and *n*-butyl acetate (Baldwin et al., 1993a). Application is now carried out in an exhaust hood in the fab with little chance for major release of the photoresist.

If a positive photoresist is used, UV radiation causes the photoresist to become soluble in a chemical called a developer. The positive photoresist can therefore be removed by the developer in those areas that have been irradiated by UV light. If a negative photoresist is used, the photoresist exposed to the UV light is cross linked so that it will not be removed by the developer. The vast majority of processing is now done with positive-acting resists. Hallock et al. (1993) stated that a typical positive photoresist composition was 60% 2-ethoxyethyl acetate (2EEA), 5% *n*-butyl acetate (NBA), 5% xylenes, and 30% resins. A second photoresist contained 70% propylene glycol monomethyl ether acetate (PGMEA) and 30% resin. The authors stated that owing to the potential dangerous reproductive effects of 2EEA, the industry has been substituting PGMEA in the formulations.

The exposed silicon dioxide is etched away by wet or dry etching using electron beam or plasma techniques. The fresh silicon surface is then available for subsequent doping by diffusion or implantation. Wet etching, by far the most common technique, uses a variety of acid mixtures to remove the silicon dioxide layer. The chemicals available for wet etching of the oxidation surface, and the other surface applied later in the process coatings, are shown in Table 23.1. The TWA exposures of coater personnel to four photoresist solvents are all negligible, as shown in Table 23.2 (Scarpace et al., 1989). The average peak exposures were 0.5, 2.2, 2.4, and 3.3 ppm. The maximum peaks ranged from 9.8 to 32 ppm. Hallock et al. (1993) also have shown that TWA concentrations in the fab are normally less than 0.1 parts per million, although peak concentrations of propylene glycol monomethyl ether acetate were in the parts per million range while refilling a photoresist reservoir in the service chase.

23.3.4 Exposure of the Wafer to Ultraviolet Radiation

The risk of UV exposure to fab personnel is neglible since the radiation is conducted in an enclosure. However, when the lamp is aligned it may be necessary to operate it outside the cabinet, placing the operator at risk of exposure to UV-B in excess of the occupational exposure limit. Safeguards including screening and personal protective equipment are necessary in this circumstance. As noted by Horowitz (1994), one could easily exceed the ACGIH TLV for UV radiation if the actinic filter is removed during maintenance. In a specific device, the exposure to UV-B/C with the filter in place is less than 0.1 μW/cm^2 and there is no restriction on viewing time. If the filter is removed, the exposure to direct UV is 10^4 μW/cm^2 and the allowable viewing time is 1 sec. The reflected level with the filter off is 10^2 μW/cm^2 and the allowable viewing time is 30 sec.

TABLE 23.1 Chemicals used in Wet Etching

Material to be Etched	Etchants
Polycrystalline silicon (Si)	Hydrofluoric acid Nitric acid Acetic acid Iodine Potassium hydroxide Ethylene diamine/catechol Ammonium fluoride Glacial acetic acid Nitric acid
Silicon dioxide (SiO_2)	Buffered oxide etch (BOE) Hydrofluoric acid Ammonium fluoride BOE Ethylene glycol Monomethyl ether Hydrofluoric acid (P-etched) Nitric acid (P-etched)
Silicon nitride (Si_3N_4)	Phosphoric acid Hydrofluoric acid
CVD oxide or pad etch	Ammonium fluoride Acetic acid Hydrofluoric acid
Aluminum (Al)	Phosphoric acid Nitric acid Acetic acid Hydrochloric acid Sodium hydroxide Potassium hydroxide
Chromium/Nickel (Cr/Ni)	Ceric ammonium nitrate Nitric acid Hydrochloric acid Nitric acid
Gold (Au)	Hydrochloric acid (aqua regia) Nitric acid Potassium cyanide (KCN) Hydrogen peroxide (H_2O_2) Ferric chloride ($FeCl_3$) Hydrochloric acid
Silver (Ag)	Ferric nitrate ($FeNO_3$) Ethylene glycol Nitric acid

Source: Adapted from Chelton et al. (1991).

TABLE 23.2 Air-Sampling Results—Photoresist Application

Contaminant	No. of Samples	Concentration of Contaminant (ppm) Geometric Mean	SD	PEL
N-Butyl acetate	288	0.82	4.71	150
Xylene	108	0.32	6.07	100
2-Ethoxy ethanol	43	0.36	3.65	200
2-Ethoxy ethyl acetate	98	0.02	4.82	100

Source: Adapted from Scarpace et al. (1989).

23.3.5 Developing and Etching

The term "developing" in semiconductor operations refers to the softening and removal of the photoresist in the UV-irradiated area of the wafer (if the photoresist is positive) using a series of baths at a wet bench station. The developing solvents wash away the irradiated photoresist, leaving the desired patttern of silicon dioxide exposed. The developers for positive photoresists are potassium or sodium hydroxide and those for negative photoresists are sulfuric and chromic acid.

After the polymeric photoresist is removed, the silicon oxide layer is etched away to permit the addition of junction-forming dopants to the silicon substrate. Both wet and dry etching is done. Wet etching of silicon dioxide is done with hydrofluoric acid or ammonium fluoride. Later in the process metal surfaces will be removed with phosphoric, nitric, or acetic acids, as noted in Table 23.1. The gases used in dry etching are listed in Table 23.3. High-energy ions from the plasma impinge on the surface and are directed to specific locations.

23.3.6 Diffusion and Ion Implantation

Dopants are now added at the junction locations (those areas where etching has removed the silicon dioxide layer) by diffusion or implantation. The diffusion process is still widely used; however, there is a trend to utilize ion implantation since the dopant can be more closely controlled with better reproducibility.

The diffusion process is conducted in a quartz tube furnace. A common configuration of this tool, shown in Figure 23.4, has three specific sections. In the left

TABLE 23.3 Dry-Etching Gases

Material	Etch Gases
Photoresist	0_2
SiO_2, Si_3N_4	CF_4, $CF_4 + H_2$, C_2F_6, C_3F_8, CHF_3
Si	CF_4, $CF_4 + O_2$, SF_6, $SF_6 + O_2$, NF_3, Cl_2, CCl_4, CCl_3F, CCl_2F_2, $CClF_3$
Al, Al-Si	CCl_4, $CCl_4 + Cl_2$, $SiCl_4$, BCl_3
Al-Cu	$BCl_3 + Cl_2$

Source: Mueller and Kunish (1989). Reprinted with permission from Lewis Publishers. Copyright. Lewis Publishers, a subsidiary of CRC Press, Boca Raton, FL.

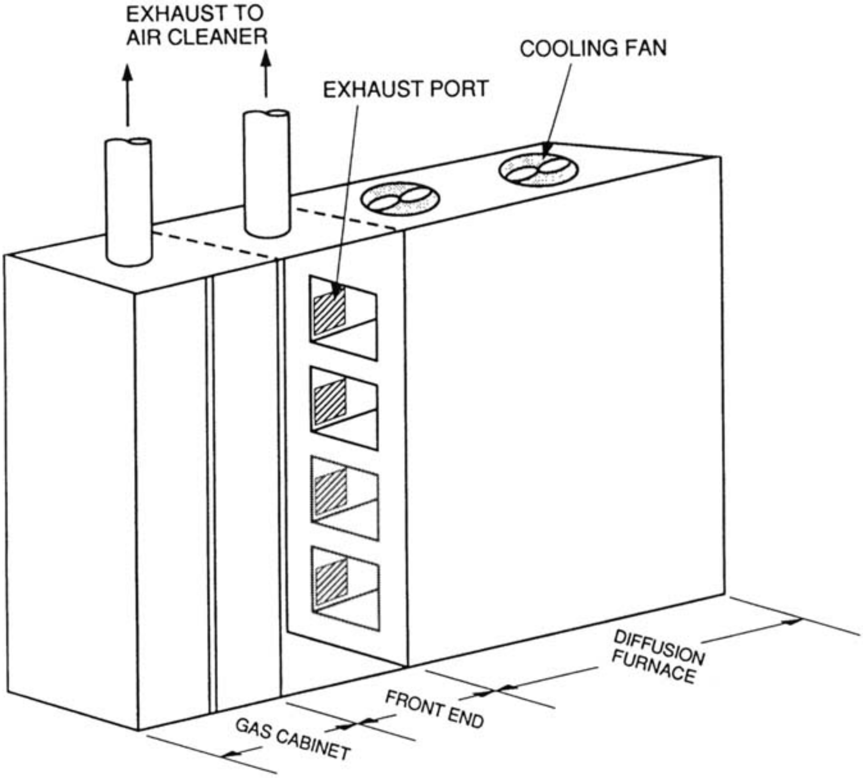

Figure 23.4 A diffusion furnace.

cabinet, gases and liquid dopants are staged for delivery to the diffusion furnaces. It is exhausted in the same manner as a gas cabinet. The next section is the front or loading end of the quartz furnaces, where the wafer boats are loaded in the furnaces. This location is provided with local exhaust ventilation to handle any contaminant lost during loading. In addition, a small exhaust port is located at the end of each furnace to capture any fugitive losses. The third section houses the furnaces, which typically operate at 900–1200°C (1650–2190°F). The total ventilation for the three sections include: gas cabinet, 600 cfm; scavenger gas exhaust, 75 cfm at each of the four ports next to the furnaces and 300 cfm at the canopy at the front end of the furnaces. The third section is provided with a cooling air sweep but it is not exhausted.

A variety of boron, arsenic, and phosphorous compounds are used in ion implantation (Baldwin et al., 1988). The phosphorous compounds include phosphorous oxychloride, phosphorous pentoxide, and phosphine. The boron compounds are boron trichloride, boron trioxide, and diborane. The common dopants include 15% arsine, boron trifluoride, diborane and phosphine, with the balance hydrogen. The ion implantation tool shown in Figure 23.5 includes a source of atoms of the dopant and an ion plasma which ionizes the dopant vapor and directs it in a fo-

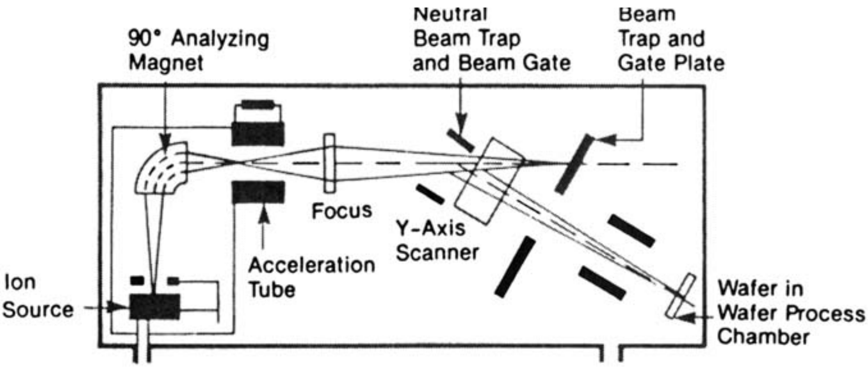

Figure 23.5 Schematic of ion implant equipment.

cused beam (less than 1 mm in diameter) to the wafer substrate. The ion stream first passes through a mass spectrometer which acts as a filter, permitting only ions of a specific mass to pass. The X rays formed during ion implantation are easily reduced to an acceptable level by shielding. Radiation leakage from interlocked access doors warrants attention. A comprehensive list of recommendations for control of ion implantation equipment was noted by Stewart (1989).

In a study of the exposure of operators to arsine and solid-source arsenic implanters, Baldwin et al. (1988) noted a maximum concentration of arsenic of 0.04 $\mu g/m^3$ in a series of eight breathing zone samples. Surface contamination was less than 10 μg of arsenic per 100 cm^2. The authors state that cleaning of ion implantation components contaminated with toxic residues presents the greatest hazard and a rigorous protocol for cleaning should be issued.

Cleaning the solid material source holder has resulted in exposures to arsenic above the occupational exposure limit; however, when wet methods were used the exposures were negligible (Baldwin et al., 1993a). Arsine and phosphine adsorbed on ion implantation equipment may off-gas when removed from the equipment. The authors caution that HEPA filters used for air cleaning on the ion implantation will release the characteristic hydride odor. A series of studies have also demonstrated that arsenic species are released from wafers.

23.3.7 Chemical Vapor Deposition

Chemical vapor deposition (CVD) provides a precise method of depositing a variety of insulating, conducting, and semiconducting layers on the wafer (Figure 23.6). This sophisticated tool is totally enclosed, has remote controls, and presents little opportunity for exposure other than during maintenance. One application is the deposition of both doped and undoped silicon on a wafer system using a gas stream of oxygen, nitrogen, silane, and phosphine. In another application CVD is employed to produce a silicon nitride layer using a blend of silane, ammonia, nitrogen, and hydrogen gases.

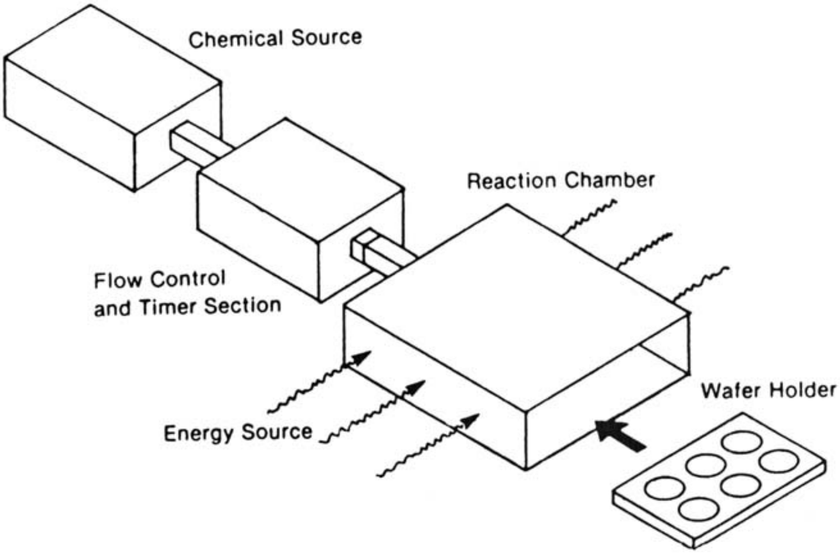

Figure 23.6 Schematic of a CVD system.

The CVD techniques use moderate radiofrequency power supplies under atmospheric or vacuum conditions. Potential emf exposures warrant review, as noted by Baldwin et al. (1993b). The authors state that the use of CVD to deposit gallium phosphide and gallium arsenide involves high concentrations of arsine and phosphine. Exposures above the occupational exposures limits may occur if the prescrubber is opened without appropriate controls. A number of papers are available on the control technology for CVD (Content, 1989; Rhoades et al., 1989; Stewart, 1989; Roychowdhury, 1991).

23.3.8 Metallization

Metallization is used to deposit conductive metal layers on the wafer, principally to make electrical connections. Athough the most frequently used metal is aluminum, others include silver, gold, nickel, chromium, and titanium. The process is done in a bell jar under pressures of 10^{-7}–10^{-8} torr. The metal may be evaporated by one of several methods, including flash evaporation, electron beam, radiofrequency, and sputtering. The principal health hazards arise in the periodic removal of the deposited material from the inside of the bell jar. The cleaning is usually done in two steps—first, the mechanical removal of the metal and second, the final cleanup with a solvent such as methanol. Studies of sputtering equipment demonstrate RF leakages exceeding the occupational exposure limit from the sides and the back of the equipment cabinet (Baldwin and Stewart, 1989).

23.4 SUPPORT EQUIPMENT

23.4.1 Gas Cabinets

In the previous discussion, reference was frequently made to the delivery of various toxic gases, noted in Table 23.4, to the production tools. The storage of these gases may be done directly at the tool, as was the case in the discussion of the diffusion furnace, or remote from the production area to minimize risk from major releases. In either case, the gas is stored in gas cabinets such as those shown in Figure 23.7.

Gas cabinets are designed to contain and remove toxic gases during accidental leaks of a few liters per minute when purging the manifold or replacing the cylinder (Forster and Burgess, 1986). The cabinets are not designed to contain major

TABLE 23.4 Extremely Hazardous Material Used in the Semiconductor Industry[a]

Chemical (Formula)	Hazardous Properties (1)	Physical State (2)	IDLH (ppm) (3)	CEL (ppm) (4)	TLV (ppm) (5)	Typical Conc. Ranges	Typical Quantity Ranges
Ammonia (NH_3)	T, F, C	CG[b]	500	35	25	25 ppm to 100%	<1 g to 23 kg
Arsine (AsH_3)	T, F	CG[b]	6.0	0.2	0.05	25 ppm to 100%	<1 g to 2.3 kg
Chlorine (Cl_2)	T, C, O	LCG	25	3.0	1.0	100%	2.3 kg to 18 kg
Diborane (B_2H_6)	T, F	CG	40	0.4	0.1	5 ppm to 1.0 %	30–190 ft^3
Hydrogen Chloride (HCl)	T, C	CG[b]	100	5.0	5.0	1.0% to 100%	<0.1 kg to 27 kg
Phosphine (PH_3)	T, F, P	CG[b]	200	1.0	0.3	5 ppm to 10%	<1 g to 5.4 kg

Source: Sherin (1989). Reprinted with permission from Lewis Publishers. Copyright Lewis Publishers, a subsidiary of CRC Press, Boca Raton, FL.

[a] Key: (1) T = toxic, F = flammable, C = corrosive, O = oxidizer, P = pyrophoric. (2) CG = compressed gas, LCG = liquified compressed gas. (3) Immediately dangerous to life and health (NIOSH). (4) Community evacuation level (Santa Clara County Fire Chiefs Association). (5) Threshold limit value–time weighted average (American Conference of Governmental Industrial Hygienists).

[b] Will be a liquefied compressed gas if in pure form.

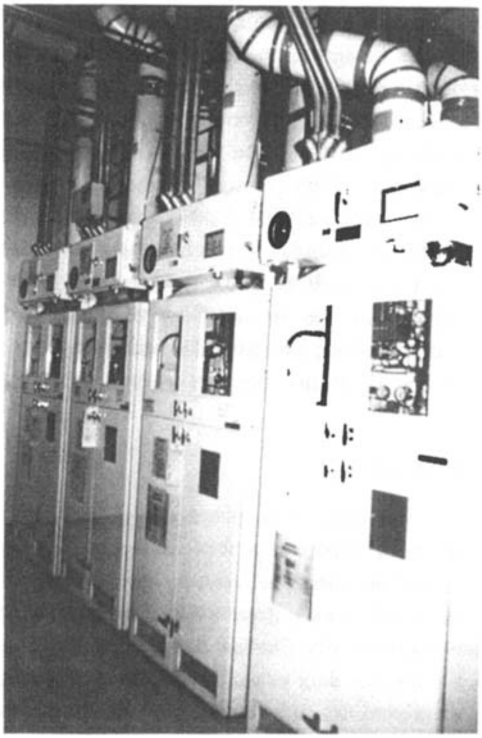

Figure 23.7 A row of gas cabinets.

releases such as would occur if a cylinder valve ruptured. The general airflow path in the most common cabinets is as follows: sweep air enters through a diffuser located near the bottom of the front door, moves vertically over the gas manifold, and exhausts through the top of the cabinet. Downward flow cabinets are also occasionally seen. Manual adjustment of the manifold valving can be made through a small access window in the front door. The cabinet ventilation system is designed to provide an average velocity of 200 fpm through the access window with a 150-fpm minimum at any point and 80 fpm at the cross-sectional area of the cabinet, or alternately 125 cfm per cylinder. The cabinet should be provided with a static tap so that airflow can be monitored at a central station.

A number of major design changes have been made in gas cylinders, valves, and manifolds over the past decade (Karolkoff, 1989). The pressure seal and diaphragm valves, first developed for the welding industry in the early 1900s, are being replaced by pneumatic valves which can be remotely actuated, thereby minimizing risk of exposure during manual operation. Stainless steel diaphragm valves with metal to metal seals are also being considered for gas cylinder application. A further safeguard is the installation of flow-limiting orifices installed in the CGA connection or as part of the cylinder valve to prevent high release rates if downstream components fail (SEMI, 1987). Complex gas manifolds are available to permit automatic purging without worker exposure.

The physical location of the gas cabinet in the semiconductor facility is a critical decision in the facility design. One philosophy is to locate the gas at the processing tool; however, this results in small storage capability with frequent cylinder changes. The second approach is to store the gas in large quantities in a bunker located outside the building; in this case the additional piping increases the opportunity for failures and leaks. The generally accepted practice in the 1990s is to deliver the gas to the tool in double-walled tubing from a remote bunker. The inner tubing carries the gas and the annular space between the inner and outer tubes is pressurized with an inert gas such as nitrogen. Leakage from the toxic gas inner tubing is monitored by continuous air sampling of the gas in the annular space. Loss prevention recommendations on siting for hazardous gas cylinder dispensing locations include preferred locations (Factory Mutual System, 1991).

23.4.2 Pump Enclosures

If prepump scrubbers are not used, it is necesary to collect and dilute vacuum pump discharge since it contains oil mist and process effluents. If pyrophoric materials are used, the dilution gas must be nitrogen. Dilution can be done in a number of different configurations, but in all cases a drain should be included to permit condensed oil mist to be removed periodically. Occasionally, the pump is enclosed and the exhaust duct is designed with low duct velocities to permit draining of the oil. It should be routine to install demisters on pumps and vent the pump discharge to a collection system. It is possible to have off-gassing occur from pump oil and filters and it may be necessary to provide an exhausted workstation for pump maintenance.

23.4.3 Wet Benches

The open wet bench configuration shown in Figure 23.3 is normally installed in Class 100 facilities, whereas the vertical laminar flow variation (Figure 23.8) is used in Class 10 facilities. All wet benches are provided with local exhaust ventilation, although the approaches vary greatly. The bench in Figure 23.3 has lateral slot exhaust on the perimeter of the tanks in addition to a vertical rear exhaust panel to handle contaminant releases when the holder and wafer are removed from the bath. The ventilation design for wet benches is based on the recommendations for electroplating tanks (see Chapter 13). To optimize operations and reduce evaporative losses, the tanks are provided with covers. The cover design noted in Figure 23.3 is poor, since lifting the tank cover pumps vapor-contaminated headspace into the fab.

In critical areas, Class 10 and below, partially enclosed wet benches are designed with a vertical laminar flow, as shown in Figure 23.8. The conventional vertical flow design provides 80–100 fpm of HEPA filtered air across the work surface. This supply and the required tank exhaust must be removed by the exhaust fan. In a typical 5-ft hood, the total exhaust is 1650 cfm, based on 400 cfm for the lateral slot exhaust, 350 cfm to provide 70 fpm inward flow through a 1-ft vertical opening across the 5-ft hood length, and a vertical laminar supply of 900 cfm.

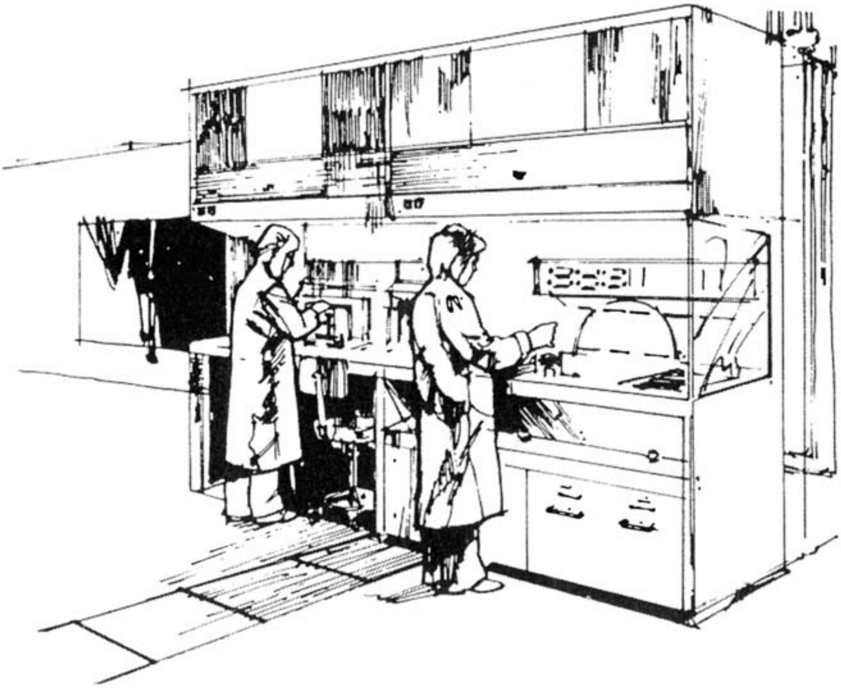

Figure 23.8 A wet bench with laminar flow. Source: Courtesy of Technomic Publishing Co., Lancaster, PA.

The fixed tanks, sinks, and wells of wet benches handling strong acids are commonly constructed of polypropylene. Heated tanks in wet benches have become the site of major fires in the semiconductor industry with property losses amounting to millions of dollars. The source of the problem may be malfunction of the temperature control, but more frequently it is failure to fill the tanks before the heaters are turned on. The result is meltdown of the plastic tanks and subsequent combustion which contaminates the fab and results in prolonged shutdown. Design information for fire protection for wet benches has been provided by Factory Mutual System (1991).

23.5 EXPOSURES AND CONTROLS

A comprehensive list of the potentially significant exposures encountered in the fabrication of semiconductors developed by Baldwin et al. (1993b) is shown in Table 23.5. A listing of the high- and low-exposure tasks in the fab area by Schenker et al. (1993) is also of value in reviewing work operations. An excellent review of the principal control approaches for the major tools is presented by Stewart (1989). The principal controls in the fab are integral to the tool and must be noted in the purchasing specification.

TABLE 23.5 Summary of Significant Exposures in Semiconductor Operations

Process	Activity/Equipment	Substance/Emission
GaAs and InP wafer manufacturing	Weighing arsenic	Arsenic
	Loading furnace	Arsenic
	Cleaning crystal growers	Arsenic
	Bead-blasting GaAs ingots	Arsenic
	Grinding/Sawing ingots	Arsenic
	Sawing GaAs ingots	Arsine
	Sawing InP ingots	Phosphine
	Cleaning work surfaces	Arsenic
Wafer preparation	Washing silicon wafers	Methanol
	Stripping carrier pads	Methylene chloride
Photolithography	Resist filter maint.	EGMEA
	UV lamp alignment	UV radiation
Etching	Plasma etching	RF radiation
	Plasma etcher maint.	RF radiation
	Polysilicon batch etching	Fluorides
	Plasma Al etcher maint	Hexacholoroethane
	Plasma Al etcher maint.	Cyanogen chloride
	Plasma Al etcher maint.	Hydrogen chloride
Diffusion and ion implantation	Deposition furnace maint.	Arsenic
	II source housing maint.	Arsenic
	Annual PM	Arsine
	Quarterly PM	Arsine
	II manipulator maint.	Phosphine
	II cryo pump maint.	Hydride (AsH_3/PH_3)
	HEPA vacuum maint.	Arsenic
	Operating Lintott 3X implanters	X-ray radiation
Chemical vapor deposition	Epi prescrubber maint.	Hydrogen chloride
	GaP CVD prescubber maint.	Phosphine
	GaAs CVD prescubber maint.	Arsine
	GaAs MBE reaction chamber maint.	Arsine
Metallization	Evaporator bell jar maint.	Silver
	Evaporator bell jar maint.	Methyl alcohol
	Operating Perkin-Elmer 4400 series sputterers	RF radiation
Assembly and test	Wave solder maint.	Lead
	Solder pot maint.	Lead
	Degreaser maint.	Degreasing solvents
	Betascope sources	Ionizing radiation

Source: Adapted from Baldwin et al. (1993b).

An impressive control technique recently introduced is the substitution of liquid bubbler generation systems for compressed gas volumetric dispensing. An example is the material substitution of tetraethyl orthosilicate (TEOS) or tetraethoxysilane for silane and dichlorosilane in CVD deposition of silicon dioxide. The manufacturer states that this material is stable, nonpyrophoric, and noncorrosive (Schumacher, 1993). In another case, the difficulties in handling compressed hydrogen chloride can be eliminated by replacing it with *trans*-1,2-*o*-chloroethylene used in a bubbler setup.

As noted above, several typical semiconductor tools use or emit ionizing radiation or nonionizing radiation. The potential X ray, UV, RF/microwave, and laser exposures are normally well controlled for the operator by some combination of interlocks and shielding. One exception may be X rays produced in ion implanters which may be run at several hundred kVP (Baldwin et al., 1993b). Additional lead shielding may be added to bring these exposures close to background levels. Exposures to radiation are more likely during maintenance and service operations when the cabinets are opened and the interlocks are bypassed. It is important to include these operations in all radiation surveys. When potential exposures are found, a combination of procedural work practice and personal protective gear is needed. Examples include remote meters to limit time near a source, protective eyewear for UV radiation from laser sources during alignments, and limiting the number of personnel in close proximity during maintenance and service. Acceptance of new tools should rigorously include assessment of radiation exposures expected during routine and maintenance–service operations.

REFERENCES

Baldwin, D. G., King, B. W., and Scarpace, L. P. (1988), *Solid State Technol.*, **31**, 99–105.

Baldwin, D. G., Rubin, J. R. and Horowitz, M. R. (1993a), *SSA J.*, **March**, 19–23.

Baldwin, D. G., Rubin, J. R., and Horowitz, M. R. (1993b), *SSA J.*, **March**, 24–31.

Baldwin, D. G. and Stewart, J. H., (1989), *Solid State Technol.*, **32**, 131–135.

Chelton, C., Glowatz, M., and Mosovsky, J. A. (1991), *IEEE Trans. Educ.*, **34**, 269–288.

Content R. M. (1989), in *Hazard Assessment and Control Technology in Semiconductor Manufacturing*, ACGIH, Lewis Publishers, Boca Raton, FL, pp. 243–258.

Factory Mutual System (1991), *Loss Prevention Data, Semiconductor Fabrication Facilities*, Factory Mutual Engineering Corp., Norwood, MA.

Forster, F. and Burgess, W. A. (1986), in *Ventilation '85, Proceedings of the 1st International Symposium on Ventilation for Contaminant Control*, October 1–3, 1985, Toronto, Canada, Elsevier, Amsterdam, pp. 175–192.

Hallock, M. F., Hammond, S. K., Kenyon, E., Smith, T. J., and Smith, E. R. (1993), *Appl. Occup. Environ. Hyg.*, **8**, 945–954.

Horowitz, M. H. (1994), personal communication.

Korolkoff, N. O. (1989), *Solid State Technol.*, **March**, 97–104.

Mueller, M. M. and Kunesh, R. F. (1989), in *Hazard Assessment and Control Technology in Semiconductor Manufacturing,* ACGIH, Lewis Publishers, Boca Raton, FL, pp. 179–201.

NIOSH (1985), *Hazard Assessment of the Electronic Component Manufacturing Industry,* DHHS(NIOSH) Publ. No. 85-100, National Institute for Occupational Safety and Health, Cincinnati, OH.

Pastides, H., Calabrese, E., Hosmer, D., and Harris, D. (1988), *J. Occup. Med.*, **30**, 543–550.

Rhoades, B. J., Sands, D. G., and Mattera, V. D. (1989), in *Hazard Assessment and Control Technology in Semiconductor Manufacturing,* ACGIH, Lewis Publishers, Boca Raton, FL, pp. 203–212.

Roychowdhury, M. (1991), *Solid State Technol.*, **34**, 36–38.

Scarpace, L., Williams, M., Baldwin, D., Stewart, J., and Lassiter, D. V. (1989), in *Hazard Assessment and Control Technology in Semiconductor Manufacturing,* ACGIH, Lewis Publishers, Boca Raton, FL, pp. 47–52.

Schenker, M. (1992), Final Report to the Semiconductor Industry Association—Epidemiologic Study of Reproductive and Other Health Effects Among Workers Employed in the Manufacture of Semiconductors, University of California at Davis, CA.

Schumacher (1993), Schumacher Newsletter, Air Products and Chemicals, Inc., Carlsbad, CA.

SEMI (1987), Flow Limiting Guideline, Document 1482, Gases Safety Subcommittee, Semiconductor Equipment Manufacturers Institute, Mountain View, CA.

Sherin, B. J. (1989) in *Hazard Assessment and Control Technology in Semiconductor Manufacturing,* ACGIH, Lewis Publishers, Boca Raton, FL, pp. 115–133.

Stewart, J. H. (1989), in *Plant Practices for Job Related Health Hazards Control,* Vol. 1, L. S. Cralley and L. J. Cralley, Eds., Wiley, New York, pp. 717–734.

Van Zant, P. (1990), *Microchip Fabrication—A Practical Guide to Semiconductor Processing,* 2nd ed., McGraw-Hill, New York.

CHAPTER 24

Batteries

24.1 INTRODUCTION

In the early 1900s the advent of the low-priced automobile and its requirement for a high-current drain, low voltage dc battery introduced a significant lead exposure to workers in battery manufacture. Rapid growth in battery-powered toys, instruments, calculators, and a variety of consumer products in the past 20 years has resulted in a large market for small single-use and rechargeable batteries that involve exposures in manufacture to lead, nickel, cadmium, mercury, and a range of other toxic materials. The environmental impact of these battery systems has been reviewed, particularly in The European Community, and battery redesign has minimized the number and quantity of toxic chemicals in their manufacture.

24.2 LEAD–ACID BATTERIES

The charged battery cell consists of a series of plates: the negative electrode is in the form of spongy metallic lead and the positive plate is lead dioxide (PbO_2). The electrolyte for this battery system is an aqueous solution of sulfuric acid. The equation of the reaction is

$$2Pb + 2PbO_2 + 2H_2SO_4 + H_2O \rightarrow 2PbSO_4 + 2PbO + 3H_2O$$

During charging, the negative plate changes from lead sulfate ($PbSO_4$) to spongy lead, while the positive electrode is oxidized from lead monoxide (PbO) to lead dioxide (PbO_2). The battery discharges with a characteristic voltage of 2.0 V, as shown in the preceding equation.

The battery plant is normally divided into lead oxide production, pasting, finishing, and forming areas. Each production area has a characteristic exposure pattern; however, in small plants the manufacturing sections adjoin one another and the workers normally rotate through all jobs. The main production activities are shown in Figure 24.1 and are discussed in Section 24.2.2 and 24.2.3 (EPA, 1977).

24.2.1 Grid Casting

Molten lead alloy at approximately 370ºC (700ºF) is fed to the grid casting machine where it flows to the individual mold cavities, cools, and solidifies to form the grid. To improve characteristics, lead–antimony alloys ranging from 3.5 to 7% antimony are used as grids, connectors, and posts in lead–acid batteries. The excess lead or flashing is trimmed from the part and returned to the lead melting pot. Since the vapor pressure of lead is low at its melting point, it is not a major source of lead fume; however, the oxidation products on the surface of the pot must be removed and this drossing operation may result in serious exposure.

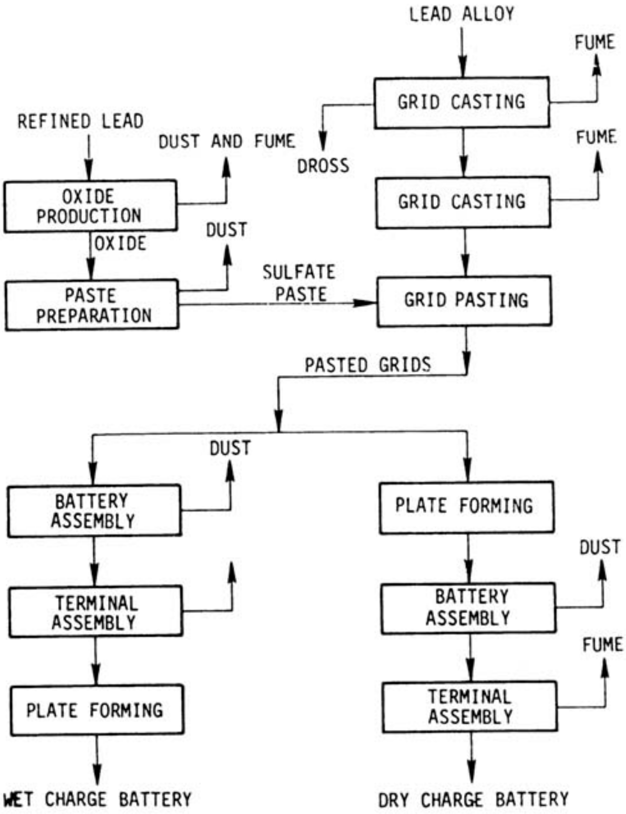

Figure 24.1 Flow diagram of a lead–acid battery plant. Source: EPA (1977).

24.2.2 Paste Production and Application

In small plants, the lead monoxide used in the manufacture of battery plates is purchased from an outside supplier. In large plants, it is prepared on site, usually by one of two methods. In the first process, molten lead is oxidized by an air blast and subsequently ground and sized before being stored for plant use. In the second method, the pig lead is held in a reverberating furnace at controlled temperature to form the oxide. These facilities must be provided with local exhaust ventilation and suitable air cleaning. The lead monoxide is mixed with water, sulfuric acid, and other additives, depending on whether positive or negative plates are being produced. This work must be conducted with local exhaust ventilation at the location where the lead oxide is charged to the mixer.

The cast grids are hand fed to a belt conveyor that passes the plates under a hopper containing the moist paste. The voids in the grids are filled with paste, the paste is pressed in place, and the plates are passed through a low-temperature drying oven. Until the grids or plates enter the oven, the paste is moist. After drying, the material is friable and represents the principal source of lead dust in the workroom. The pasting machine normally is not provided with local exhaust ventilation.

24.2.3 Finishing and Forming

When the plates leave the oven, they are cleaned with a power wire brush to remove excess plate debris and clean the tabs. This is a dusty operation and warrants close attention.

In the production of dry-charge batteries the plates are stacked, electrically connected, and "formed" electrically in a dilute H_2SO_4 bath so that the $PbSO_4$ (anode) is converted to Pb and the negative electrode PbO plate is converted to PbO_2. Then the assembly is placed in a battery case, which is usually cast from hard rubber or plastics such as polystyrene, polypropylene, polyvinyl chloride, or acrylonitrile–butadiene–styrene. Coal or petroleum pitch, asbestos, or other minerals may serve as fillers. Finally, the top of the battery is sealed with asphalt or epoxy resin. In the wet-charge process, the battery is assembled, electrolyte is added, and the plates are "formed."

The lead smelting and reclamation operations associated with battery manufacture present a critical problem and require rigid ventilation control and good housekeeping. The oxide mixing facility must be equipped with a dust control system, and dispensing operations should be designed to minimize exposure to lead.

From the time the lead oxide paste is applied to the plates, control of the exposure becomes more difficult. The application itself presents little difficulty, but as soon as the paste becomes dry, it is easily dispersed into the air. This may occur when the plates are subsequently cleaned, transferred, racked, stacked, trimmed, and split. If the wet paste is allowed to fall on the floor or contaminate equipment, sooner or later it will dry and add to the airborne dust. Good housekeeping is absolutely essential in this industry.

Work tables with downdraft exhaust have proven effective in controlling contamination and resuspension. The plates should be handled manually as little as possible. The plates of ready-charged batteries are handled and shipped dry, ready for service as soon as the electrolyte is added, and these offer more serious dust control problems than plates that are handled and shipped wet.

Controlling lead exposure in storage battery manufacture is not a piecemeal problem, but one that requires a well-rounded health maintenance program, including (1) competent engineering control, (2) preemployment examinations with biological monitoring, (3) periodic surveys of atmospheric contamination, (4) periodic determinations of lead levels in the blood of persons in potentially hazardous workplaces, (5) education of employees about personal hygiene, good health practices, and safe working procedures, and (6) transfer of overexposed workers to a position of minimum exposure (NIOSH, 1973).

Floors must be surfaced and covered for easy cleaning. Vacuum cleaning must be used; protective clothing and suitable eating and sanitary facilities divorced from the production area are necessary.

The battery charging room is subject to contamination by hydrogen and acid mist, and since battery grids often contain from 5 to 10% antimony, production of stibine is at least theoretically possible. Dilution ventilation is the conventional control technique in the charging area.

The air and blood concentrations of lead on various jobs in a United Kingdom battery plant are shown in Table 24.1 (Williams et al., 1969). A survey of a large battery plant by NIOSH showed that grid mold, pasting, battery assembly, and lead reclamation areas had airborne levels that exceeded 100 $\mu g/m^3$. One quarter of the samples taken in grid molding, battery assembly, and reclamation exceeded 200 $\mu g/m^3$ (NIOSH, 1977).

24.3 NICKEL–CADMIUM BATTERIES

In the nickel–cadmium battery, both negative and positive electrode materials are contained in porous plates. The negative electrode is cadmium hydroxide [$Cd(OH)_2$] and the positive electrode is nickel hydroxide [$Ni(OH)_2$]; the electrolyte in this system is an aqueous solution of potassium hydroxide (KOH). The charge-discharge equation is

$$\mathrm{Cd} + 2\mathrm{H_2O} + 2\mathrm{NiOOH} \quad \underset{\text{Charge}}{\overset{\text{Discharge}}{\rightleftarrows}} \quad 2\mathrm{Ni(OH)_2} + \mathrm{Cd(OH)_2}$$

When charged, $Cd(OH)_2$ is reduced to cadmium metal and $Ni(OH)_2$ is converted to NiOOH.

Cadmium and nickel plate materials can be manufactured in a number of ways and the hazards in their manufacture have not been published in the open literature. It is common to have the prepared active electrodes shipped to a plant for assembly of vented and sealed battery cells. In a plant surveyed by NIOSH in a Health Hazard Evaluation, the major exposures to nickel and cadmium were from the handling of nickel containers and the active ingredients on the plates (NIOSH,

TABLE 24.1 Representative Mean Lead Exposures and Biologic Lead Levels for Workers in the Storage Battery Industry

Job	Number of Workers	Mean Air Lead Concentration (mg/m^3)	Mean Blood Lead Concentration (g/100 g blood)
Machine pasting	6	0.218	74.2
Hand pasting	8	0.150	63.2
Forming	9	0.134	63.0
Casting	6	0.052	—
Plastics Dept. A	5	0.012	27.2
Plastics Dept. B	5	0.009	29.1

Source: Williams et al. (1969).

1976). Cobalt hydroxide [$Co(OH)_2$] may also be present in the positive electrode material. In this assembly plant, the electrode stock is cut to size, terminals are welded to the plates, and the plates are interleaved with separators. The assembly is placed in a container, electrolyte is added, and the cells are sealed. Air concentrations of cadmium and nickel routinely exceeded 0.10 mg/m^3 and 1.0 mg/m^3, respectively.

The investigators recommended that cracker machines and terminal welding stations in this plant be provided with local exhaust ventilation. As in the case with lead–acid batteries, compressed air and sweeping should not be used for cleaning; rather, a central vacuum system should be utilized.

24.4 DRY-CELL BATTERIES (LECLANCHE)

The negative electrode of the dry cell is the zinc can, which also serves as the structural container for the battery. The positive electrode is manganese dioxide (MnO_2), with an electrolyte consisting of an aqueous solution of ammonium chloride (NH_4Cl) and zinc chloride ($ZnCl_2$), which infuses the manganese dioxide. An organic paste inner lining on the negative electrode also is saturated with NH_4Cl and $ZnCl_2$. This sleeve contains small quantities of mercuric chloride ($HgCl_2$), which forms an amalgam on the inner surface of the zinc can. A carbon rod embedded in the positive electrode material acts as the current collector. The discharge reaction of the battery is

$$2MnO_2 + 2NH_4Cl + Zn \rightarrow ZnCl_2 \cdot 2NH_3 + H_2O + Mn_2O_3$$

Heavy-duty zinc–carbon cells have the same construction and reaction as the standard Leclanche cell except that the electrolyte is based solely on zinc chloride.

In the alkaline manganese cell, the negative electrode is finely divided zinc amalgamated with mercury. A highly conductive alkaline KOH electrolyte is used to impregnate the electrode mass. The positive electrode is based on an electrolytically produced MnO_2. Electrolyte is also absorbed into the positive electrode mass and a metal current collector is immersed in the electrolyte. The charge–discharge reactions for this battery are shown as both a primary and rechargeable system.

Primary

$$2Zn + 2KOH + 3MnO_2 \rightarrow 2ZnO + 2KOH + Mn_3O_4$$

Rechargeable

$$Zn + KOH + 2MnO_2 \rightleftharpoons ZnO + Mn_2O_3 + KOH$$

The principal hazard in dry-cell manufacture is attributed to MnO_2 dust generated from the initial powder mixing and later handling. In a study of workplace protection factors of a disposable respirator in an alkaline dry cell plant, Wallis et al. (1993) obtained a total of 99 personal air samples to define the outside mask concentration of manganese dioxide. A summary of this extensive data set for the major job classifications in the plant is shown in Table 24.2. There can also be exposure to ammonium and zinc chloride during weighing, mixing, and dispensing, however, once the electrolyte is added, the dust exposure is minimized. The use of mercury and its salts has been reduced due to environmental concerns but still presents a potential hazard and warrants air sampling and biological monitoring.

The controls required during preparation of the depolarizer include ventilation, wearing of personal protective clothing, and rigorous housekeeping based on vacuum cleaning of the area.

TABLE 24.2 Geometric Mean Exposures to Mn by Categories

Category	Job	Exposure to Mn GM (mg/m^3)	Range (mg/m^3)
Transfer, virgin powder	Bag Slitters	13.3[a]	8.7–20.35[a]
Processing	Mechanics Rework Operators	1.02	0.14–3.50
Transfer, processed powder	Powder drop Operator	2.19	0.21–7.00
Powder, insertion into cans	Press operators Beader operators Material handlers Extrusion operators	0.87	0.14–13.2

Source: Wallis et al. (1993). Courtesy of American Industrial Hygiene Association.

[a] In calculating the GM, a single measurement of 77.4 mg/m^3 was excluded because it was obtained under non-typical conditions. If the measurement of 77.4 mg/m^3 is included, then GM = 18.9 mg/m^3.

24.5 MERCURY CELL

The mercury battery has a negative electrode of powdered zinc and a positive electrode of mercuric oxide (HgO). An aqueous solution of potassium hydroxide (KOH) is infused in both electrodes and the necessary separators. The discharge reaction is

$$\mathrm{Zn + HgO + KOH \rightarrow ZnO + Hg + KOH}$$

The manufacturing process takes place in four specific phases. In the oxide plant, HgO is formed by first cleaning the mercury and then combining it with chlorine and sodium hydroxide in enclosed reactors. The oxide is transferred from the reactors, dried, and packaged. The major exposures during this operation are to HgO dust and metallic mercury vapor.

The negative zinc–mercury amalgam is formed in the anode room and pelletized in the geometry required for battery assembly. The principal exposure occurs during handling and charging of the zinc–mercury materials, with limited exposure during press operations.

Material for the positive electrode is made by mixing manganese oxide, graphite, and cadmium and pressing the mixture into the battery case. Exposure to mercury vapor and dust from the various electrode components occurs in the depolarizer room.

The two electrodes and associated piece parts are assembled mechanically. Exposure to mercury vapor is negligible in this area.

The principal exposures in this operation are to particulate zinc–mercury amalgam and elemental mercury vapor. The range of airborne levels shown in Table 24.3 were noted by NIOSH in a Health Hazard Evaluation survey (NIOSH, 1979). These data indicate major exposures to mercury in the depolarizer room, anode room, and oxide plant. The air-sampling data were supported by elevated mercury in urine data.

TABLE 24.3 Air Concentrations of Mercury Vapor

Location	Job	Average Exposure (mg/m^3)	95% LCL–UCL (mg/m^3)
Depolarizer room	Press operator	0.56	0.41–0.71
	Slugger operator	0.77	0.51–1.03
	Mechanic	0.50	0.26–0.72
Anode room	Amalgam blender	0.26	0.11–0.41
	Press operator	0.09	0.05–0.13
Oxide plant	Process operator	0.45	0.04–0.96
	Material handler	1.29	0.5–3.09

Source: NIOSH (1979).

REFERENCES

EPA (1977), *Control Techniques for Lead Emissions*, Vol. 4, Appendix B, US Environmental Protection Agency, EPA 450/2-77-012, Research Triangle Park, NC.

NIOSH (1973), *Criteria for a Recommended Standard—Occupational Exposure to Inorganic Lead*, Publ. No. HSM 7-11010, National Institute for Occupational Safety and Health, Cincinnati, OH.

NIOSH (1976), Health Hazard Evaluation Report No. 74-16-272, National Institute for Occupational Safety and Health, Cincinnati, OH.

NIOSH (1977), Health Hazard Evaluation Report No. 77-28-552, National Institute for Occupational Safety and Health, Cincinnati, OH.

NIOSH (1979), Health Hazard Evaluation Report No. 78-26-560, National Institute for Occupational Safety and Health, Cincinnati, OH.

Wallis, G., Menke, R., and Chelton, C. (1993), *Am. Ind. Hyg. Assoc. J.*, **54**, 576–583.

Williams, M. K., King, E., and Walford, J. (1969), *Brit. J. Ind. Med.*, **26**, 202–207.

PART EIGHT

MINERALS

CHAPTER 25

Quarrying

25.1 INTRODUCTION

The term quarrying refers to the open pit removal of a wide range of mineral products. A number of commodity rock products are quarried in bulk by drilling, blasting, and transferring the rubble by heavy earth moving equipment to a crushing plant for sizing and packaging. The bulk materials include traprock, crushed stone, kaolin clay, limestone, and mica. Other materials, including slate, marble, and granite, may be quarried for dimensional architectural or construction purposes. The common health hazards of quarried bulk materials are discussed together, while the quarrying of dimensional stone is discussed using granite as an example.

Although the minerals listed above vary in composition, they all present a dust exposure which frequently includes a significant quartz component depending on the quarried mineral and its deposit bed. The quartz content in a range of mineral commodities quarried in North Carolina (Rice et al., 1984) is shown in Table 25.1. It is the presence of quartz that presents a consistent health hazard in all quarrying operations. Rock drilling is the one operation discussed in detail since this dust-generating operation is encountered in all bulk and dimensional stone quarrying.

25.2 ROCK DRILLING

Rock drilling is done by air-powered percussion drills that deliver power to the cutting bit through a combination of rotation, impact, and thrust. If deep holes are required, steel rods are used to connect the power conversion unit, or drifter, to the bit. Compressed air causes the drill mechanism to rotate while rapid blows are delivered by a piston to a striker bar and transmitted through the "string" of drill steels to the

TABLE 25.1 Average Quartz Content of Settled Dust Samples, by Commodity and Production Location

Mineral Commodity	Location	Number of Samples (n)	Percent Free Silica Mean ± SD
Crushed stone	Plant	51	29.32 ± 14.40
Granite	Plant	44	25.38 ± 14.59
	surface	6	27.02 ± 16.77
Hard rock	Plant	1	13.40
Kaolin	Plant	17	30.27 ± 15.20
Lithium	Plant	1	34.60
Other	Plant	32	18.01 ± 17.35
	Surface	1	11.80
Pyrophyllite	Plant	30	49.05 ± 17.22
	surface	1	53.90
Talc	Plant	3	1.49 ± 0.06

Source: Adapted from Rice et al. (1984).

bit. Thrust is provided by a separate air motor through a chain drive to the drifter or by hand in the case of hand-held drills such as jackhammers. Cuttings are blown from the hole by blow air introduced through the center of the drill steel and bit.

Sinker drills, or jackhammers, shown in Figure 25.1, are designed to drill holes from 1.3 to 6.4 cm (1/2–2 1/2 in.) in diameter and are primarily used for secondary drilling in breaking up boulders, general excavation, and other jobs where short, small-diameter holes are required. Jackhammers will pulverize up to 20 in.^{3} of rock per minute, which is cleared from the hole by the blow air.

Track drills consist of larger drills mounted on self-propelled crawler carriers that can be driven over very rugged terrain (Figure 25.2). Most blast hole drilling is done with these machines. Power is supplied through a flexible hose by an air compressor that can be towed by the track drill. The typical drill rig requires approximately 0.28 m^3/s (600 cfm) at 620 Pa (90 psig) distributed as follows: blow air, 0.05 m^3/s (100 cfm); feed or thrust air, 0.01 m^3/s (25 cfm); rotation air, 0.06 m^3/s (125 cfm); and percussion or drill air, 0.18 m^3/s (350 cfm). Most track drills are designed to drill holes up to about 11.4 cm (4 1/2 in.) in diameter and larger equipment is available for holes up to 15.2 cm (6 in.) in diameter. These drills pulverize 800–4000 cm^3 (50–250 in.^{3}) of rock per minute. After drilling, the blasting operations are commonly done with ammonium nitrate–fuel oil (an-fo). Unlike underground mining, the resulting gases do not present a significant exposure in open pits.

Considerable work has been done in controlling dust in rock drilling. The most common dust control technique for track drills is water mist injection. In this method, water, either alone or with a wetting agent such as a detergent, is introduced as a mist into the blow air. The dust collected by the water mist forms small damp pellets that drop out at the edge of the hole. If too much water is used, the pellets form a mud "collar" or a bridge between the steel and the sides of the hole. On the other hand, too little water is ineffective for dust suppression.

Figure 25.1 Jackhammer or sinker drill. *Source*: Courtesy of Ingersoll-Rand Co., Woodcliff Lake, N.J.

The water injection system has no parts exposed to dust abrasion and its efficiency is constant throughout the life of the system. It is also more economical than other control techniques. However, not all the dust is trapped and there are other disadvantages as well. Track drills are frequently operated far from any source of water, thus water supply can be a problem. Water tends to displace the lubricant in the system, causing increased wear and maintenance costs. The drilling rate is usually reduced with water injection. The slurry tends to harden and form "collars" or irregularities in the hole behind the bit. The collars have to be broken before the bit will come out, sometimes damaging or losing the steel or bit in the process. In northern latitudes, antifreeze must be used to keep the system from freezing. These problems result in significantly higher operating costs for extra rigs and operators to maintain production.

Mechanical collectors using a reverse airflow through the drill steel or an exhaust hood around the drill steel at the hole collar and powered by air ejectors or mechanical blowers have been developed. Systems are now available with small air-cleaning packages for application on small drills and large track

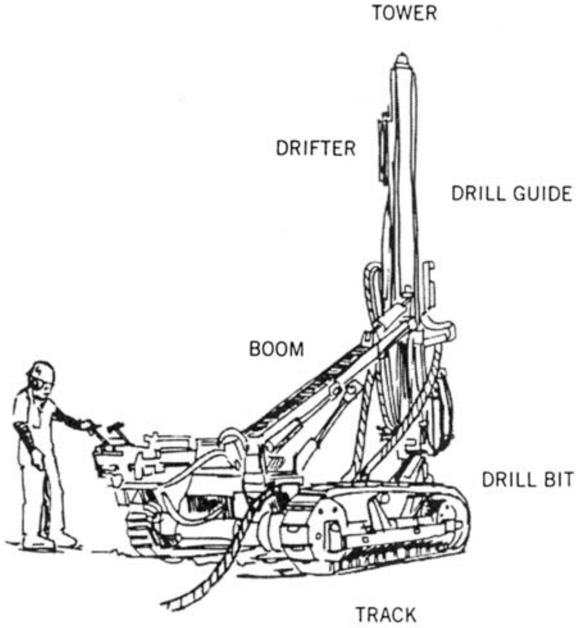

Figure 25.2 Track drill showing major components.

drills (Figure 25.3). Dry collectors require less attention than and have a number of advantages over wet drilling: penetration rate and bit life are better; air alone is more effective in cleaning and stemming blast holes; and the mechanical problems of freezing and transport of water are avoided. The installation is more expensive, however, and internal parts are subject to wear from abrasion, leading to decreased efficiency and higher maintenance costs. Low air volume–high velocity dust capture systems offered by certain manufacturers present a second ventilation approach to dust control on pneumatic rock drills.

Noise and vibration are normally associated with the operation of rock drills. Great advances have been made in the design of air compressors and drills to reduce worker exposure, although exposures may still exceed 90 dbA. In a telling chronicle, Taylor et al. (1984) recall that in 1917 Alice Hamilton identified vibration white finger (VWF) in stonecutters using pneumatic drills in limestone quarries in Indiana. She called for an immediate redesign of the tools to eliminate this occupational disease. The author visited the same quarries in 1978 and found 24 out of 30 stonecutters had VWF. No change had been made in the design of the pneumatic drills and all drills exceeded occupational exposure limits for vibration. Only in the past decade have manufacturers introduced drills that have improved vibration isolation.

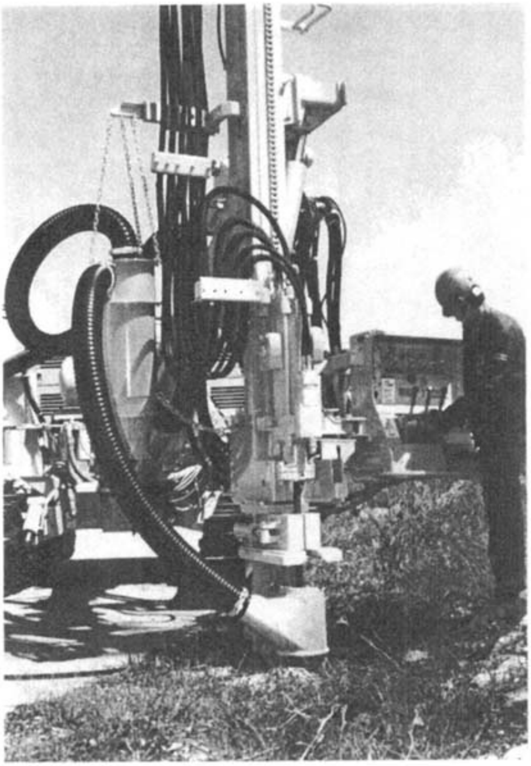

(a)

Figure 25.3 Dust control system on track drill using local exhaust ventilation. (*a*) Exhaust collar around drill steel. (*b*) Cartridge-type air cleaner (next page). *Source*: Courtesy of Ingersoll-Rand

25.3 BULK MINERAL QUARRYING

Open quarries resemble small versions of open pit metal and coal mines. Frequently heavy overburden as deep as 100 ft must be removed to establish quarry face heights of 30–200 ft. Loose gravel can be removed directly by earth-moving shovels and construction-type hauling equipment. The health and safety issues involved in such operations are well described by Burns et al. (1962) and include noise, vibration, heat, and dust. Few data are available on dust exposures in mineral commodity quarries, although these operators are exposed to dust which frequently has high quartz content.

The bulk materials are either processed directly at the quarries, in the case of crushed stone for road construction, or transported to a mill for crushing and subsequent milling. An example of such a processing plant is shown in Figure 25.4.

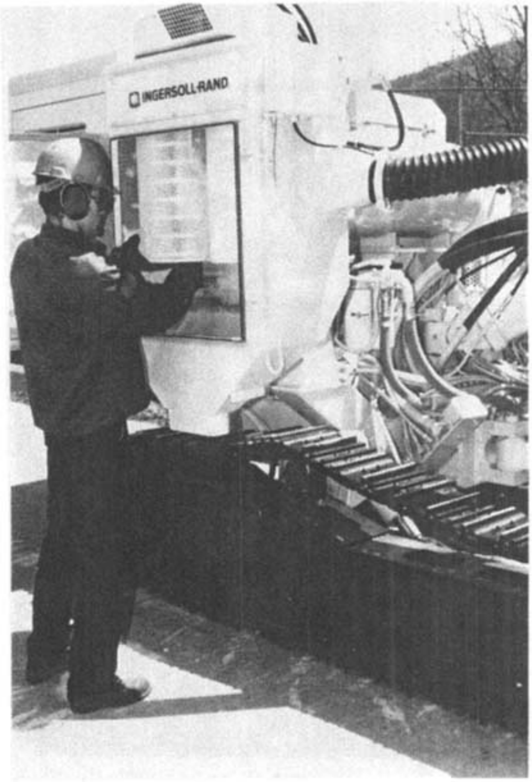

(b)

Figure 25.3*b* (Continued)

The plant receives quarried traprock, processes it through a primary and secondary crusher, and then sizes it using graduated screens with oversized materials returning to the crusher. The principal problem in such a plant is dust control at crushers, screens, storage hoppers, and most importantly at the transfer points on the bucket and belt conveyors. Initial attempts at dust control at rock crushers were based on the use of enclosing hoods with a face velocity at all open areas in the range of 150 to 200 fpm. In many installations these recommendations did not provide adequate control. A subsequent design approach, still cited in the ACGIH ventilation manual, specifies a face velocity at open areas with the total airflow not to be less than a second design criterion, such as 350–500 cfm/ft of conveyor belt width, 0.5 cfm/ft^3 of bin volume, or 50 fpm/ft^2 of screen area. Many of the installations based on these designs do not provide adequate control since the designs do not anticipate the large quantity of air induced into the system by the falling stone. Techniques are now available that permit calculation of the induced flow under most of the conditions encountered in rock crushing plants (Burgess et al., 1989).

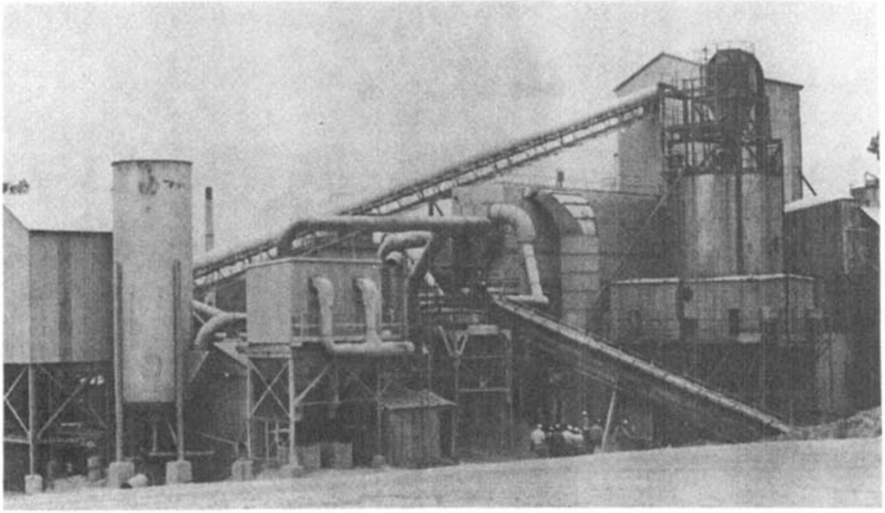

Figure 25.4 Crushing plant at a roofing firm.

In addition to quartz dust, there has been concern that rock quarries may contain asbestos in the overburden or the rock strata. A NIOSH study of 9 limestone, 5 granite, and 5 traprock quarries showed that asbestos was present in only one traprock quarry and that the airborne concentrations were below occupational exposure limits (Kullman, 1987). However, in 10 out of 19 quarries, the exposure to crystalline quartz exceeded the NIOSH REL of 50 $\mu g/m^3$ and 1 out of 7 workers was overexposed to quartz.

25.4 DIMENSIONAL STONE QUARRYING

In the early quarrying of dimensional stone such as granite (Figure 25.5), the material was removed solely by drilling and blasting operations. This was quite wasteful of rock, and a variety of new quarrying techniques were developed, some of which present occupational health hazards. The degree of hazard in quarrying dimensional stone depends on the characteristics of the parent rock and, most importantly, its free silica content.

In the early 1900s, core drilling was used to block out an island of granite for subsequent removal. This procedure has been replaced by flame cutting using channel burners (Figure 25.6). A channel burner is essentially a large blow torch on a long handle fueled by compressed air and diesel oil. The operator moves the tip of the burner over the granite and the hot flame spalls the rock, generating a kerf of a few inches. The maximum noise exposure is noted when cutting is started and the burner is operating in open air (118–122 dbA). The minimum

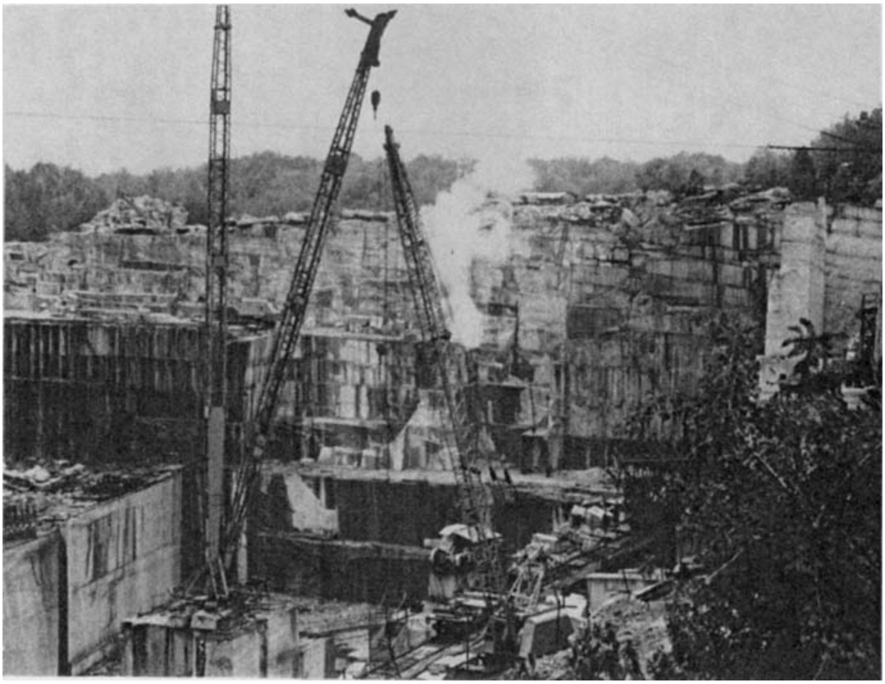

Figure 25.5 A large New England granite quarry.

exposure occurs when the burner is deeply immersed in the cut (114–116 dbA). With an impressive 20-dBA reduction with muff-type ear protection, the worker will still have a exposure above 100 dbA. For this reason, in 1990 OSHA described a number of alternatives to oil–air channel burners with a declared time period to evaluate the alternatives. Operating with oxygen at a lower pressure reduces the noise level by 5 dbA—not an adequate reduction. A number of quarries are using automated burners which permit the operator to stand some distance from the burners. Another attractive alternative is the use of high pressure water jets to cut the stone.

The channel burners generate a particulate cloud consisting of a crystalline respirable dust, a submicrometer rock fume, and fused micrometer-sized spheres, as shown in Figure 25.7 (Burgess and Reist, 1969). After the channel cuts have been made, the island of stone is cut into slabs or blocks using a fluted flat wire saw that carries a silicon carbide abrasive to the cut. This operation does not present a health hazard, although erecting the cutting towers can be dangerous. In-quarry cutting provides a semifinished product that can be removed from the quarry using lifting eyes inserted into holes drilled in the individual slabs or blocks. If this drilling is done dry, a significant dust exposure may occur.

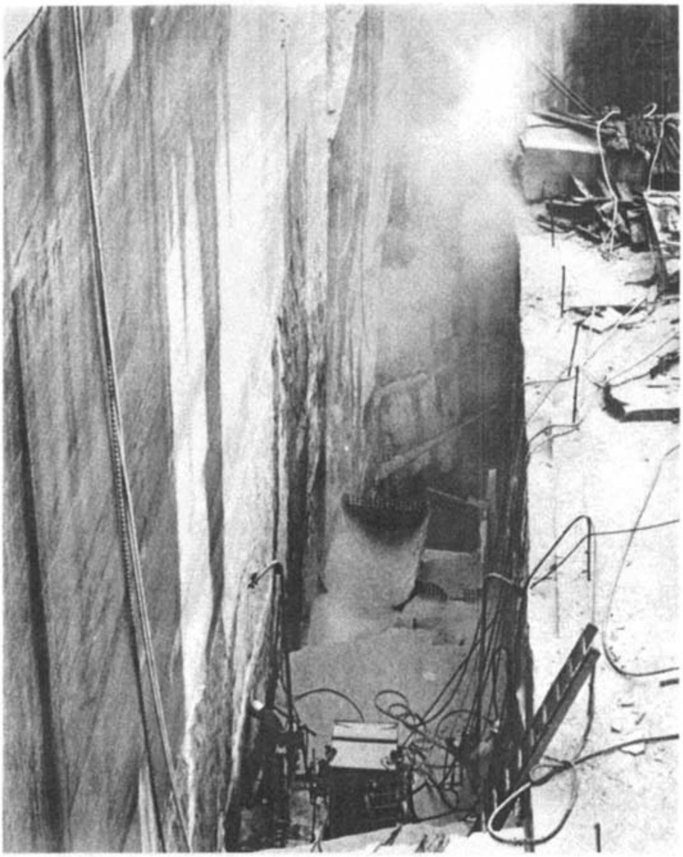

Figure 25.6 Channel burning in a granite quarry. The burner, suspended from a boom, is cutting deep in the kerf. The dust and burner emission plume is visible in the upper right hand corner.

The dimensional stone is usually processed at a mill located close to the quarry. The production techniques used for architectural products include most of the common hazards. In small job-shop operations, the quarry stone is cut to shape by a small wire or diamond saw (Figure 25.8). Until recently, granite road curbing was cut by first drilling with gang drills, then splitting the stone with wedges. Now, high production of such items as curbstone is done by guillotine splitters. All these operations may be dusty, although the wire and diamond saw, wire saw, and gang drilling usually can be controlled by wet methods. Guillotine cutting is done dry, and the work area must be equipped with local exhaust ventilation.

The finishing operation in the mills includes surfacing with pneumatic tools (Figure 25.9), small fuel oil–oxygen burners, and polishing tables using various

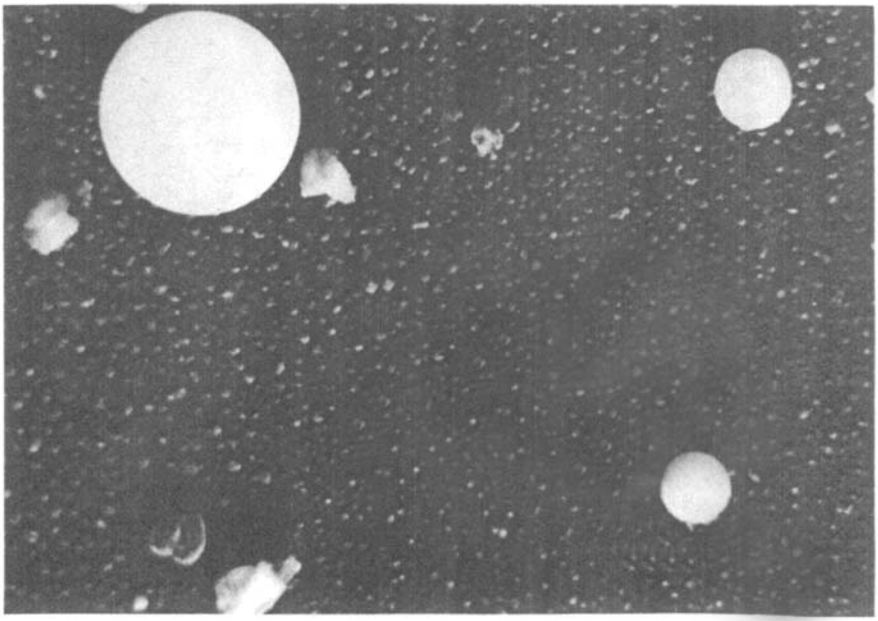

Figure 25.7 Airborne particles from a channel-burning operation.

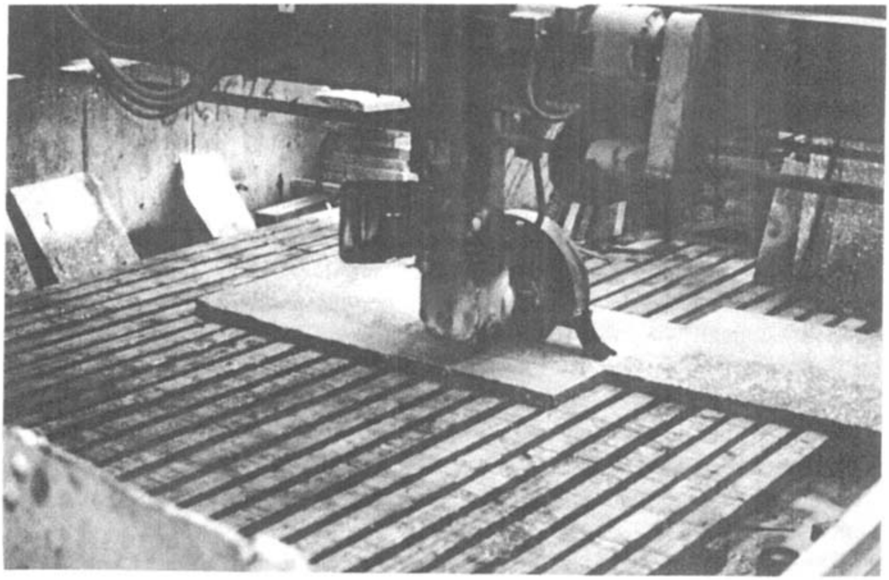

Figure 25.8 Diamond saws operating with water.

Figure 25.9 Granite cutting with local exhaust ventilation.

wet abrasives. Sculpting is done by burners, pneumatic tools, and abrasive blasting. The hazard varies with the quartz content of the parent rock. Most of these finishing operations, except polishing, require excellent local ventilation control. Flame surfacing has not been adequately studied and warrants monitoring.

Dimensional stone quarries frequently have a crushing plant for recovery of scrap. As in the case of bulk quarrying described above, the crushers, transfer points, and screening operations all require ventilation control. The dustiest operation is usually bagging, though modern bagging equipment now available includes integral exhaust hoods.

In evaluating dust exposures in quarries, it is extremely important that personal monitoring be conducted; personal experience has shown that there is little relationship between fixed location and personal monitoring. In siliceous dust such as that encountered in granite and slate quarries, the silica exposure should be measured by analysis of respirable mass on personal air samples. It is not uncommon for the parent rock to contain 30% free silica and the respirable sample only 10% free silica.

REFERENCES

Burns, A. F., Ottoboni, F., and Mitchell, H. (1962), *Am. Ind. Hyg. Assoc. J.*, **23**, 273–281.

Burgess, W. A., Ellenbecker, M. J., and Treitman, R. D. (1989), *Ventilation for Control of the Work Environment*. Wiley, New York.

Burgess, W. A. and Reist, P. (1969), *Am. Ind. Hyg. Assoc. J.*, **30**, 107–112.

Kullman, G. J. (1987), Industrial Hygiene Study of Crushed Stone Workers, presented at the 1987 American Industrial Health Conference, Montreal, Quebec.

Rice, C., Harris R. L., Lumsden, J. C., and Symons, M. J. (1984), *Am. Ind. Hyg. Assoc. J.*, **10**, 689-696.

Taylor, W., Waserman, D., Behrens, V., Reynolds, D., and Samueloff, S. (1984), *Brit. J. Ind. Med.*, **41**, 289–295.

CHAPTER 26

Mining

26.1 INTRODUCTION

Diverse minerals are mined in both underground and surface mines. The health hazards include dust exposures to the mineral being recovered and its associated rock, natural and man-made gases and vapors, and a gamut of physical hazards. In this chapter, a variety of occupational health problems that occur in all mining operations are identified; specific attention is given to coal mining because of its large underground employment and the range of hazards that exist.

It is convenient to class mines as coal, metal, and nonmetal. The total number of miners in the United States in the late 1980s was 465,000, with the largest sector coal mining, employing 208,000. The balance was made up of 93,000 in nonmetal mining, copper and iron mining employed 57,000, and there were 107,000 support personnel who did not work in the mines. The 208,000 coal miners produced more than 700 million tons of coal. About 140,000 miners worked underground and produced 38% of the total coal; the balance was produced by less than 70,000 surface miners.

Other than coal, few minerals are mined primarily underground and most of those are of low tonnage. Antimony, lead, and tungsten are mined almost exclusively underground; 62% of molybdenum is mined underground, as is a like percentage of silver. It is believed that almost two-thirds of the underground miners in the United States are working in coal mining. Ninety-five percent of all metallic ores and 75% of all crude nonmetallic ores come from surface mining.

26.2 TYPES OF MINES

Surface mines may be developed in a number of ways to remove metal or coal. Area mining conducted on flat terrain is the simplest and most efficient method of mineral removal (Figure 26.1*A*). The mineral may be just below the surface or, as in the case of coal mining in Wyoming, 100–200 ft of earth and rock overburden must be stripped away to reveal the target seam. Contour mining is another surface mining technique typified by mining coal outcroppings in the mountains of West Virginia (Figure 26.1*B*). The side of the mountain is notched or cut away as if one were building a road. The exposed coal seam, ranging from 2 to 12 ft high, is removed and frequently a large auger is used to follow the seam up to 150 ft into the side of the hill. A third type of surface mine is the open-pit mine; a good example is a large copper mine in Utah (Figure 26.1*C*.). The mining process in open-pit mining is similar to that encountered in large earth-moving jobs in that blast holes are drilled, blasting occurs, the rubble is picked up with large earth movers, and the ore is trucked to a crushing plant.

Underground mining may also be done in three ways. Drift mines are used to mine outcroppings on the sides of mountains by following the seam horizontally by tunneling into the mountain (Figure 26.2*A*). In slope mines, the ore body is accessed by a tunnel slanting downward from the surface to the ore body or the coal seam (Figure 26.2*B*). Shaft mines are accessed by vertical shafts which may reach depths of 1 mi, as in the case of metal mines in Colorado (Figure 26.2*C*). A series of tunnels spread out from the shaft in a geometry designed by the engineer.

26.3 MINING HEALTH ISSUES

The equipment and processes in surface mining are identical to those encountered in very large construction jobs and exposures include roadway dust, dust from the ore body and the supporting material, noise, vibration, and ergonomic stresses.

The underground mining hazards can be classed as naturally occurring or generated by the mining activity. Among the former, oxygen deficiency (blackdamp), especially in old workings when a reducing ore exists or organic material is decomposing, can be a major hazard. Significant radon progeny concentrations occur not only in uranium mines but also in mineral mines that have not been worked recently. The physical hazards in mining include extremes of temperature and humidity, poor lighting, noise and vibration, and ergonomic issues including working posture and repetitive motion. The rock temperatures underground increase at a rate of 1°C for each 100 m of depth. The high rock temperature in deep mines and the humid conditions that exist because of the extensive use of water for dust suppression may cause a serious heat stress problem. In the deep mines of South Africa, air-conditioning plants are installed underground to deliver cool air to the working faces. Personal cooling systems have also been developed based on frozen water garments.

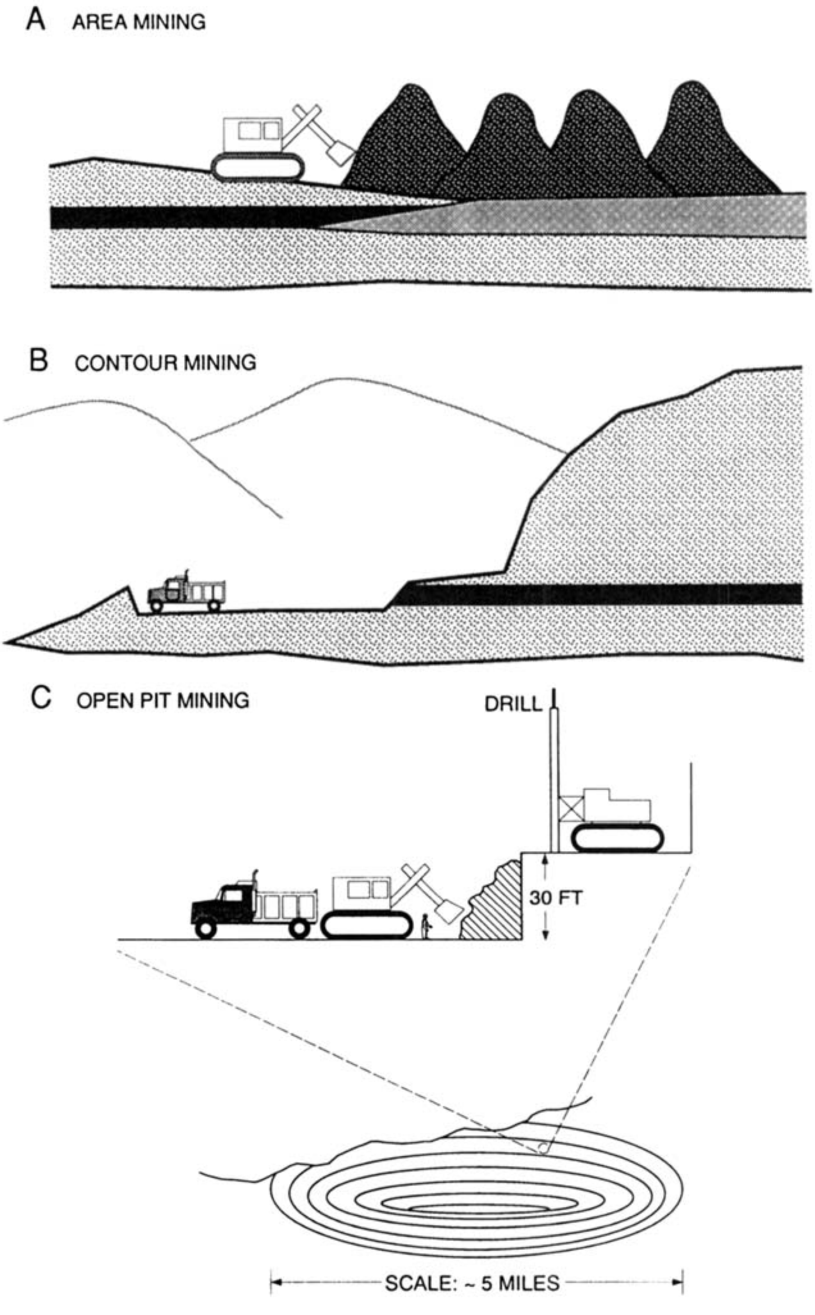

Figure 26.1 Surface mining techniques: (*A*) area mining; (*B*) contour mining; (*C*) Open-pit mining. In Figure 26.1A and B the ore body is represented by the solid black area.

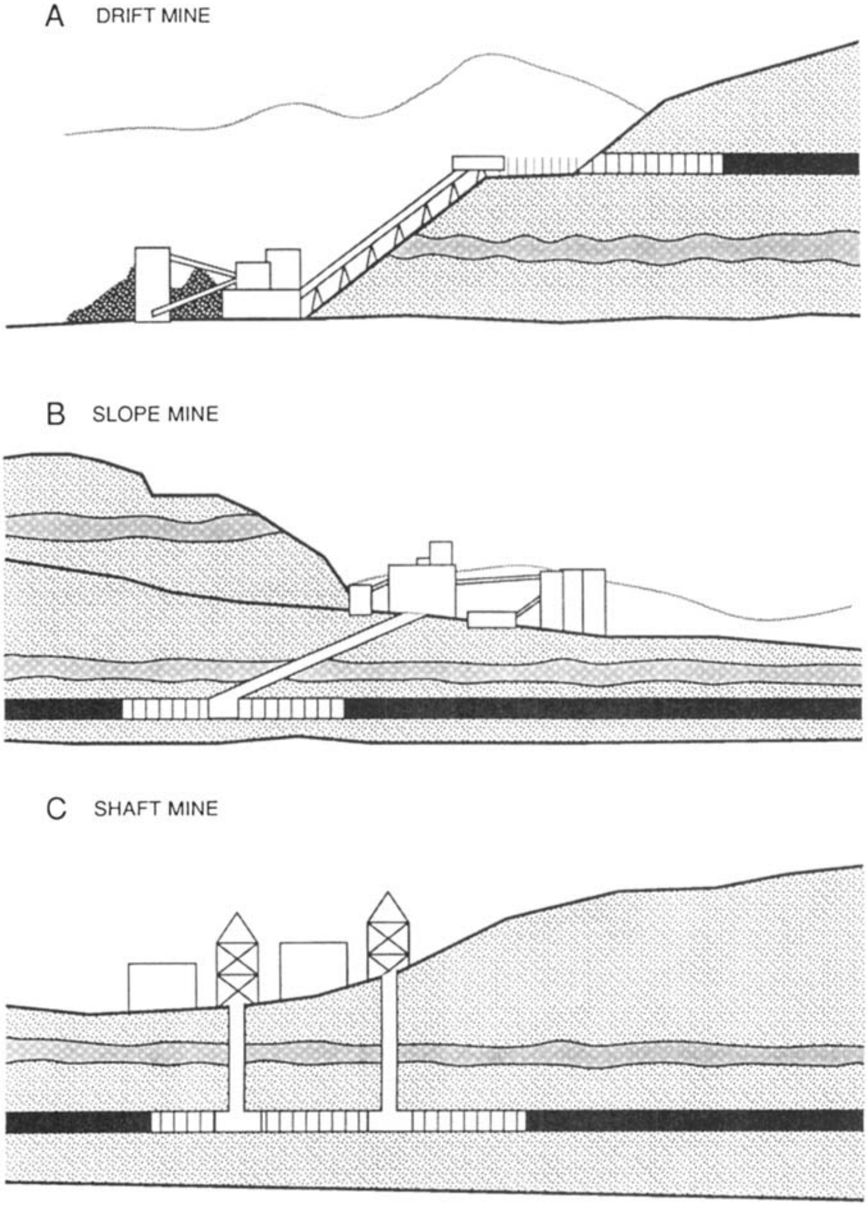

Figure 26.2 Underground mining techniques: (*A*) drift mines; (*B*) slope mines; (*C*) shaft mines. The ore body is represented by the solid black area.

In addition to natural sources, man's underground activity generates other toxic gases and vapors. Straight dynamite (100% nitroglycerin) is not employed underground, but a blend of dynamite and ammonium nitrate or other explosives, compounded to minimize the release of toxic gases, is in common use. A current practice is to use ammonium nitrate prills saturated with fuel oil and fired with

TABLE 26.1 Common Names of Mine Gases

Type of Gas	Common Name
Methane	Fire damp
Carbon monoxide	Whitedamp
Hydrogen sulfide	Stinkdamp
Oxygen deficiency	Blackdamp
Gases from explosives	Afterdamp

dynamite caps. The principal gaseous contaminants from blasting are carbon monoxide (whitedamp) and nitrogen dioxide (afterdamp). The common names for mine gases are shown in Table 26.1.

The increased use of diesel engines underground contributes particles and exhaust gases containing aldeyhdes, nitrogen dioxide, and carbon monoxide. A series of epidemiological studies in the 1980s have shown a small but consistent increase in lung cancer attributable to diesel exhaust in other work settings (Schenker et al., 1992). The International Agency for Research in Cancer has stated that diesel exhaust is a probable human carcinogen (IARC, 1989). This information has resulted in a concern with regard to the extended use of diesels underground. Scrubbers are used frequently on diesels to remove exhaust gases and particles.

The use of percussion drills and other compressed air tools presents a serious noise hazard to the underground miner. This problem can be controlled fully only by equipment redesign, which will be prompted by rigorous purchasing specifications. Serious loss of hearing has been noted in mining populations. A comprehensive study of VWF in this population has not been attempted to date. A range of ergonomic problems exist in underground mining from high work rate, difficult working positions, and repetitive motion.

A dust problem is usually related to the mineral being extracted or the materials associated with the ore body. Silicosis is not a major problem for coal miners, however, hard rock metal miners do have significant exposures. In 1915 the prevalence of silicosis in hard rock mining was 65.5%; a 1960 study showed it to be 3.4%. One should know the complete geological characteristic of the ore body, not merely the main mineral constituents, to evaluate this dust exposure properly.

26.4 UNDERGROUND COAL MINING

Coal workers pneumoconiosis (CWP), commonly called black lung, is a chronic lung disease caused by the inhalation of coal dust. The disease was deemed a compensible disease in England in the 1930s. A 1963–1965 survey in US coal mines showed CWP in 9.8% of working miners and 18.2 % of nonworking miners in the Appalachia fields (Breslin and Niewiadomski, undated). The Federal Mine Health and Safety Act of 1969 and the Federal Mine Safety and Health Amendments Act of 1977 have as a major objective the prevention of CWP. These acts set a respirable mass coal dust standard of 2 mg/m^3 based on respirable mass sampling with a per-

Figure 26.3 An underground coal miner wearing two personal air samplers during a respirator test.

sonal sampler (see Figure 26.3). In addition, they provide compensation for miners disabled from CWP and for the survivors of CWP victims. Since the original act was passed, nearly one-half million miners have received compensation at a total cost in excess of 12 billion dollars. It is estimated that 55% of currently working coal miners have a nondisabling stage of CWP.

26.5 COAL MINING TECHNIQUES

26.5.1 Conventional Mining

Although it is being replaced by other techniques, conventional coal mining in a room and pillar setting continues to produce 10–15% of the underground coal mined in the United States. The first step in conventional mining is to cut a slot about 6 in. high and 10 ft deep at the base of the seam with the cutter machine shown in Figure 26.4. The cutter head looks like a very large chain saw positioned to make a horizontal cut. A number of holes for ammonium nitrate explosive are then drilled in the coal face using a track-mounted drill. The area is cleared, the charge is detonated and about 50 tons of coal are pulverized and drop to the mine floor. A loading machine (Figure 26.5) with gathering arms and an integral short conveyor element loads a shuttle car for transport to a belt conveyor. When the pile of coal rubble is cleared from the mine floor, the roof is bolted to prevent rock falls and rock dusting is carried out. These important support activities are discussed below.

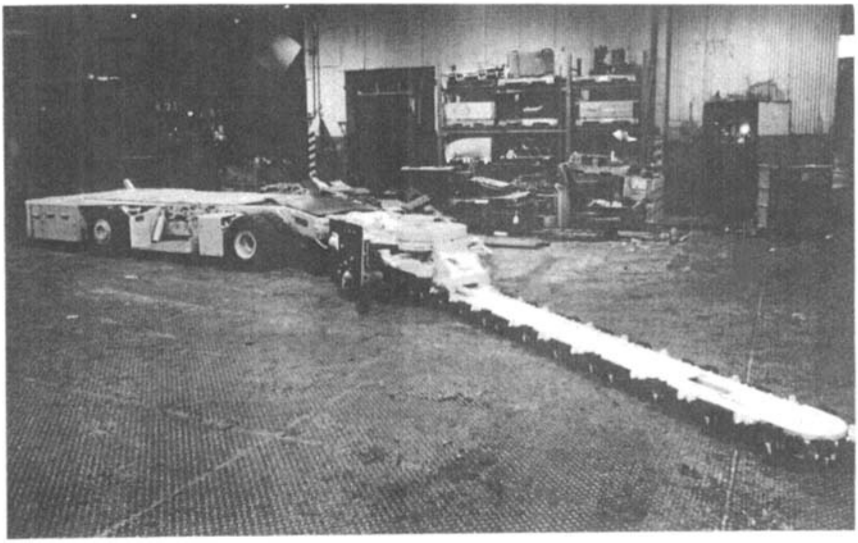

Figure 26.4 A conventional mining cutter in a repair shop.

26.5.2 Continuous Mining

The continuous miner, which accomplishes all of the operations done in conventional mining with a single piece of equipment, accounts for two-thirds of all coal mined in the United States. The cutting head is a rotating cylinder about 2 ft in diameter and 2–10 ft long, covered with sharp picks (Figure 26.6). This head is raised to the top of the seam and makes a downward sweep, cutting out

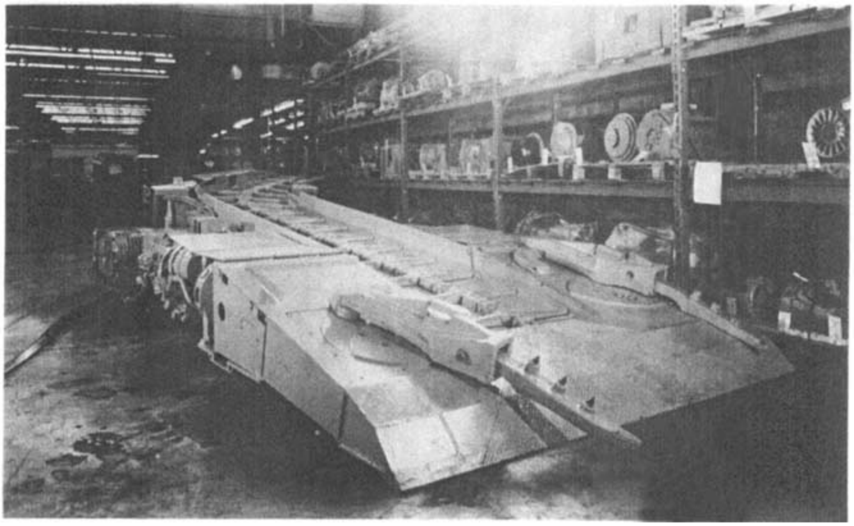

Figure 26.5 A conventional mining loader.

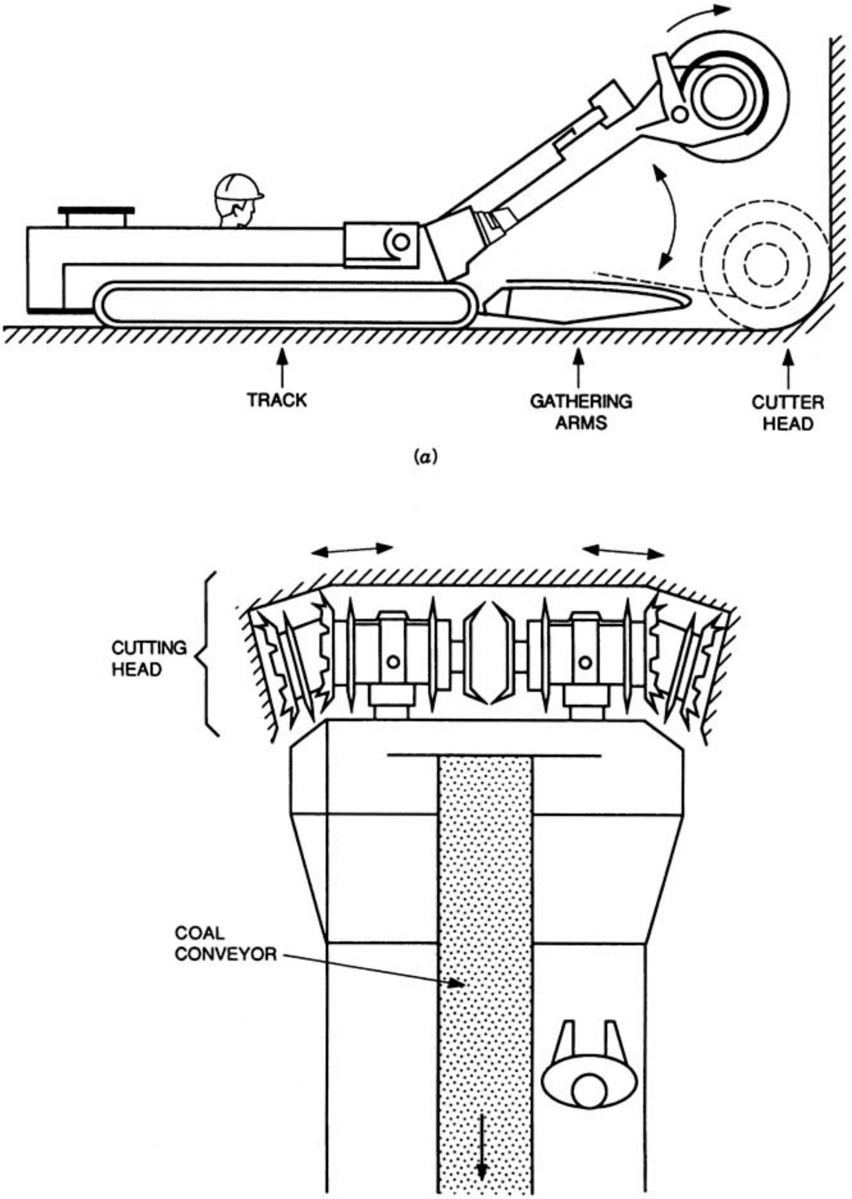

(*a*)

(*b*)

Figure 26.6 A continuous miner: (*a*) side view; (*b*) top view.

a swath of coal which is gathered by sweeping arms and directed first to a conveyor mounted on the continuous miner and then to the main conveyor. The room is mined, the continuous miner moves to another position and the roof bolter and rock duster do follow-up work as discussed below (Marovelli and Karhnak, 1982).

26.5.3 Long-wall mining

Long-wall mining, which now accounts for 10–12 % of US underground coal production in the United States, is an extremely efficient mining method if one has seam geometry which permits its use. The long wall shearer system requires considerable setup time, as shown in Figure 26.7. In our example the block of coal to be removed is isolated by using a continuous miner to cut two roadways 800 ft

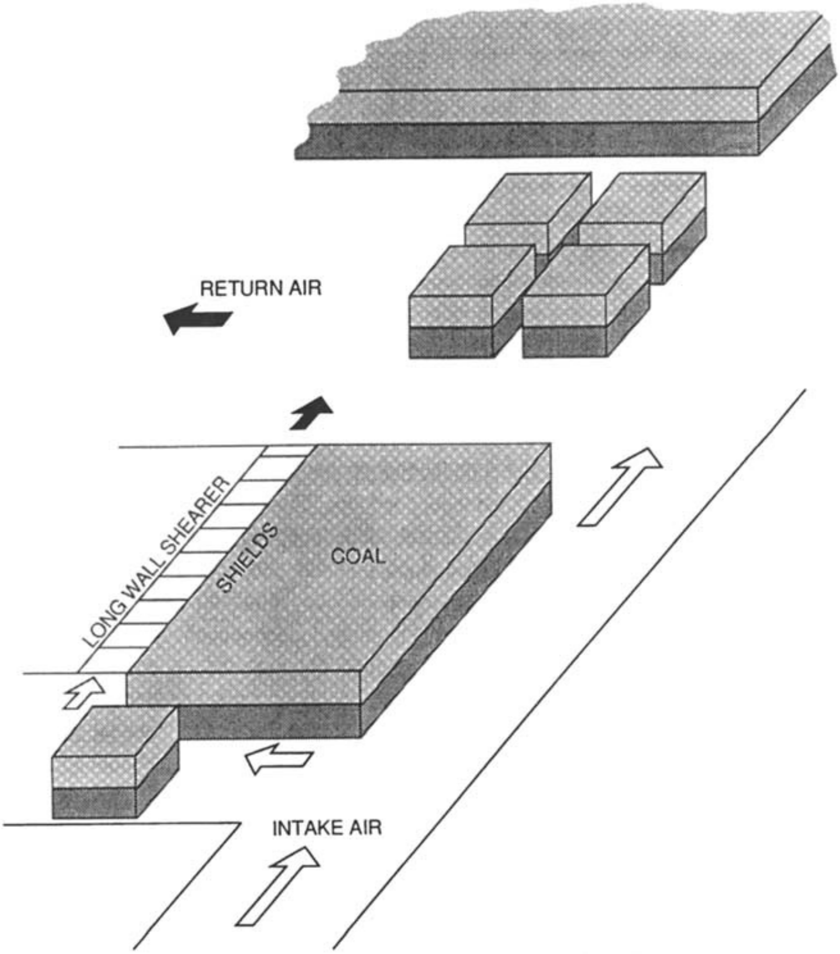

Figure 26.7 Long-wall mining.

apart and 1–2 mi deep. The long-wall mining equipment, consisting of roof support shields, face conveyor, and cutting machine, is set up to traverse the 800-ft face. The cutter, equipped with two counter-rotating shearers, traverses across the seam face while making a cut; the coal drops to the conveyor, which transports it to a main haulage conveyor. When the first cut is completed, the shields move forward toward the face for the next cut; the roof, previously supported by the shields, collapses. The machine requires two operators, and owing to the geometry of the operation, dust control at the operator's location is difficult.

26.5.4 Support Activities

In early coal mining practice, roof falls were common and frequently resulted in deaths. The solution was to prop up the roof with wooden timbers. This inefficient and dangerous practice has been replaced by roof bolting. After the room is mined, crews drill vertical holes on 4-ft centers into the ceiling and 4- to 6-ft long roof bolts are inserted. The bolts are held in place by expansion shells, in a fashion similar to a moly bolt, or with polyester resin. Once positioned, the roof bolts bond the rock strata together and support the roof as a continuous member. Since the rock overburden may contain significant concentrations of quartz, this drilling operation may present a significant exposure. To control the dust, the drilling may be done wet or the drill can be equipped with exhaust, as described in Chapter 25.

After the rock drilling is completed and the roof is stabilized, rock dusting is done. This sounds like a counterproductive idea in a mine where one wishes to keep the dust concentration down. Why is it done? Highly mechanized cutting of coal enhances the release of methane (firedamp) from the fresh coal face. In gassy mines it is possible to see methane bubbling up through standing water on the floor. The methane production in some mines is so impressive that there has been serious attention given to the collection and liquefaction of the gas as a fuel. Methane has an explosive range of 5–15%. If a source of ignition is present, the methane will explode, with catastrophic results. The primary methane explosion will resuspend all settled coal dust in the mine and that dust cloud will then explode with tremendous force, killing miners at the site instantaneously and generating lethal concentrations of carbon monoxide (whitedamp). For this reason, coal miners must have an emergency self-rescuer immediately available. This device is either an air-purifying or a self-contained respirator to permit emergency escape in case of an explosion. This chain of events can be interrupted in several ways. The first technique is to provide dilution ventilation to prevent the buildup of methane to the lower explosive limit. More will be said about this later. A second technique is to ensure that there is no source of ignition. This practice is followed in a number of ways in the mine, but one source, electrically powered mining equipment, cannot be eliminated. In this case, sensors can be installed on all powered equipment which shut it down if concentrations of methane exceed a certain limit. Rock dusting is a final control. Powdered limestone is distributed throughout the freshly mined area by a small blower. The settled coal dust is covered with the inert limestone dust, and if resuspended, the coal dust will not sustain an explosion. The mandatory dusting procedure explains why underground coal mines are white, not black.

26.6 DUST CONTROL

As a part of its responsibility under the Federal Mine Safety and Health Amendments Act, the Bureau of Mines must conduct research on primary dust reduction measures, for example, through new cutting methods, and secondary reduction methods, achieved through face ventilation, dust collection, water spray, and respirators.

The foremost hazard, dust exposure to the toxic mineral dust or silica exposure from the host rock, calls for special attention. Wet methods are a principal control, and water is used with percussion drills, to infuse working faces at the cutting head of continuous miners, and to wet down loose rock. Wetting agents are used to improve the effectiveness of the wet procedures. Comments are made on the effectiveness of wet drilling in Chapter 25. New designs for cutting and drilling tools, including integral exhaust, can be helpful in reducing exposure. The effects of dust from blasting is minimized by conducting this operation when the miners are not in the area. Wetting down with water before and after blasting is important also.

The principal dust control is, of course, ventilation. The two conventional methods of providing ventilation at the cutting face are shown in Figure 26.8. Brattice or line cloth, a heavy plastic curtain material, is used in mines to define the airflow path. Two alternate positions are shown. In one case the brattice is set up to blow air across the face and in the other the air is exhausted across the face. In practice, the blowing air does a better job of controlling methane and the exhaust air provides better dust control at the face. In the exhaust configuration the miner is upwind of dust generation at the face. The exhaust system is the primary dust control method in continuous mining operations and it usually permits compliance

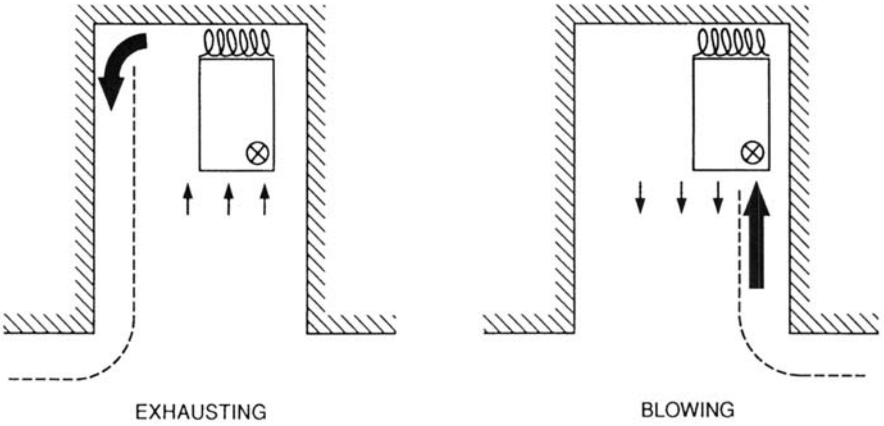

Figure 26.8 Ventilation at a working face showing continuous miner cutting at the face. The dotted line represents the brattice cloth (curtain) defining the airflow path.

with the dust standard. Dust control on long-wall mining is more difficult. Selective use of brattice to more effectively direct the sweep air across the machine helps, but the most effective method uses water sprays to induce airflow across the operator's station to reduce dust exposure.

REFERENCES

Breslin, J. A. and Niewiadomski, G. E. (undated), Improving Dust Control Technology for US Mines, A Bureau of Mines Impact Report, US Bureau of Mines, Pittsburgh, PA.

Hamrick, C. H. (1992), *Appl. Occup. Environ., Hyg.*, 7, 14–16.

IARC (1989), *IARC Monograph on the Evaluation of Carcinogenic Risks to Humans, Diesel and Gasoline Engine Exhausts*, International Agency for Research on Cancer, Geneva.

Marovelli, R. and Karhnak, J. M. (1982) *Sci. Am.*, **247**, 91–100.

Schenker, M. B., Kado, M. Y., Hammond, S. K., Samuels, S. J., Woskie, S. R., and Smith, T. J. (1992), *Env. Res.*, **57**, 133–148.

CHAPTER 27

Smelting

27.1 INTRODUCTION

This discussion covers only primary smelting of copper and lead since these operations demonstrate the range of occupational health hazards that exist in this industry.

27.2 COPPER

The principal processes in copper refining include mining, concentrating, and smelting (Nelson et al., 1977). Copper ore is available as either an oxide or sulfide ore (Table 27.1) and usually is surface mined. Ore beneficiation is conducted near the mining site by grinding the crushed ore in a ball mill to form a slurry to which flotation "assists" are added. The froth containing the copper is skimmed off, dewatered, and shipped to the smelter as a 16–32% concentrate with approximately the composition shown in Table 27.2. The workplace exposures in a copper smelter are identified in Table 27.3 and the major steps are portrayed in Figure 27.1.

The initial operation at the smelter is roasting, which dries the ore concentrate and controls the sulfur content. The calcine formed is fed to the reverberatory furnace with recycled precipitates, converter slag, flue dust, limestone, and silica flux (Figure 27.2). Matte, a mixture of cuprous and ferric sulfide, is formed along with a slag of various metal silicates. The matte, which contains 35% Cu, is charged by ladle to the converter with silica flux. Air is blown into the hot metal through tuyeres and metal silicate slag is formed on top of the cuprous sulfide. The slag is recycled periodically to the smelting operation to recover the remaining copper. The blister copper formed in the converter is approximately 98.5% pure. This interme-

TABLE 27.1 Composition of Copper Ores

Oxides		Sulfides	
Malachite	$CuCO_3 \cdot Cu(OH)_2$	Chalcocite	Cu_2S
Azurite	$2\ CuCO_3 \cdot Cu(OH)_2$	Chalcopyrite	$Cu_2S \cdot Fe_2S_3$
Cuprite	Cu_2O	Covallite	CuS
Atacamite	$CuCl_2$	Bornite	$FeS \cdot 2\ Cu_2S \cdot CuS$
Brochantite	$CuSO_4 \cdot 3\ Cu(OH)_2$		

Source: Adapted from Nelson et al. (1977).

diate is further refined in a gas-fired furnace and the copper is poured into molds to form slabs of blister copper. This product is refined electrolytically in a copper sulfate–sulfuric acid electrolyte bath with the blister copper as the anode and a thin plate of pure copper as the cathode. The copper from the blister copper slab is deposited as 99.5% copper on the cathode.

Since ore, flux, and by-product granular material are handled in large quantities in copper smelting, there is a dust exposure to siliceous dust and metal fumes. In almost all operations, sulfur dioxide is present, as is carbon monoxide from the combustion processes. Noise and heat stress are the principal physical hazards, the latter due primarily to radiation from furnaces. Representative data on sulfur dioxide and metal fume concentrations are presented in Tables 27.4 and 27.5 (NIOSH, 1975). The metal fume exposures depend on the composition of the feedstock.

Dust emission is controlled by local exhaust ventilation at material transfer points; sulfur dioxide exposures are controlled by both local exhaust and dilution ventilation. Respirators for particulate and acid gas protection are worn routinely.

27.3 LEAD

The processing of lead includes all common smelting and refining techniques. The flow sheet for lead smelting is shown in Figure 27.3 and the workplace exposures are tabulated in Table 27.6 (EPA, 1977).

TABLE 27.2 Composition of Copper Ore Concentrate

Element	Percent
Copper	16–32
Arsenic	0.001–6.7
Lead	0.003–1.3
Zinc	0.004–2.2
Cadmium	0.001–0.04
Molybdenum	0.1–0.5

Source: Adapted from Nelson et al (1977).

TABLE 27.3 Copper Smelting Reactions and Exposures

Operation	Purpose	Equipment	Reactions	Workplace Exposures
Roasting	Dries ore concentrate Controls S content Produces calcine	Roasters Multiple hearth Fluid bed	$2Cu_2S + 3O_2 \rightarrow 2Cu_2O + 2SO_2$ (calcine)	Ore dust SO_2 CO Heat
Smelting	Produces Cu–Fe sulfide matte (35% Cu) and siliceous slag Charge is concentrate or calcine, recycled precipitates, converter slag, flux dust, limestone and silica flux	Furnace Reverberatory Electric	$Cu_2S + 2CuO \rightarrow 4Cu + SO_2$ $2Cu + FeS \rightarrow Cu_2S + Fe$ (matte)	Lead-containing dust (8%) Flux dust CO Matte dust/fume SO_2
Converting	Produces blister copper (98.5%) Charge is matte and silica flux	Converter	$2Cu_2S + 3O_2 \rightarrow 2Cu_2O + 2SO_2$ $Cu_2S + 2CuO \rightarrow 4Cu + SO_2$ (blister Cu)	Lead-containing dust (1–8%) Flux dust CO SO_2 Metal dust/fume
Refining	Produces domestic copper (>99.5% Cu)	Electrolytic refining	Electrolytic bath of $CuSO_4 + H_2SO_4$ Cu(impure) → Cu_2 → (pure) Impurities come off as slimes	H_2SO_4 mist

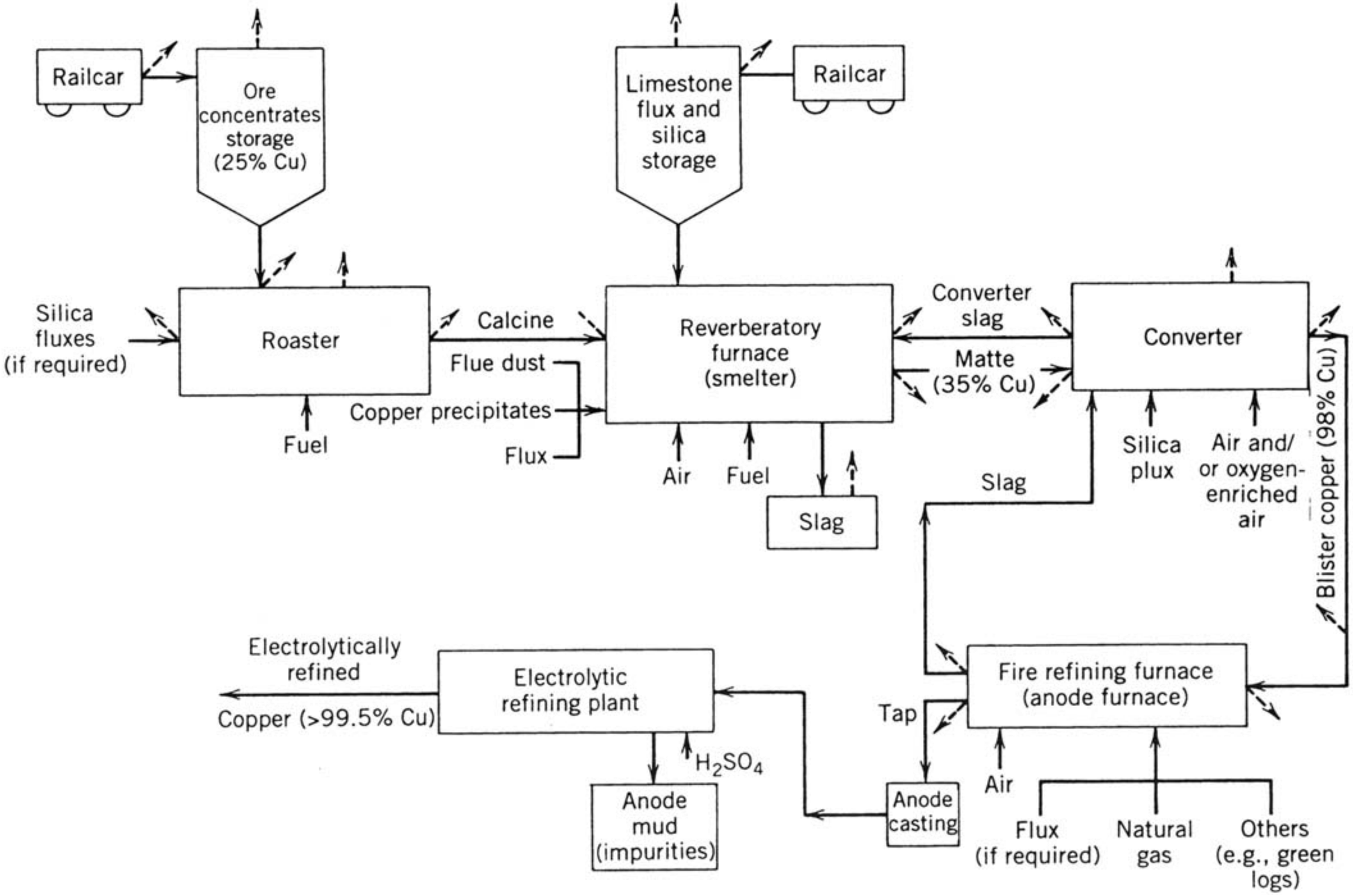

Figure 27.1 Process flow diagram for primary copper smelting showing fugitive emissions. *Source*: EPA (1977).

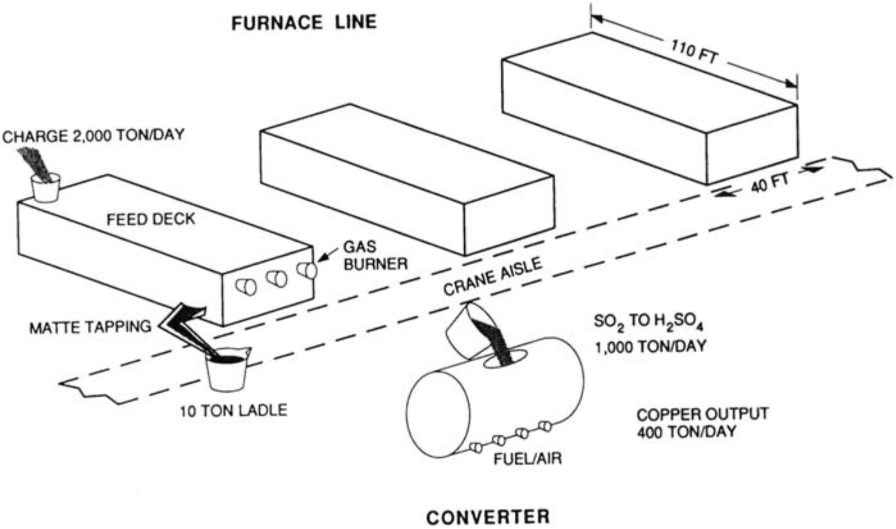

Figure 27.2 Layout of a primary copper smelter showing the reverberatory furnace and the converter. *Source*: Courtesy of T. Smith.

The crushed and ground ore, which may contain 3–8% lead along with other heavy metals, is concentrated using differential flotation. The concentrate is mixed with limestone, silica sand, and iron ore, and is then pelletized. The pelletized product is sintered and in the process the sulfur content is reduced by oxidation of the sulfur to sulfur dioxide and the lead sulfide is converted to the oxide. The sulfur dioxide gas is recovered by an acid plant. Sinter coke, limestone, silica, litharge, and slag-forming materials are charged to a blast furnace for smelting, and the lead is reduced to metallic lead. The molten lead and slag are run off, and the two materials are separated by gravity. The slag, which is rich in zinc that was present in the ore, is removed to the zinc plant. The molten lead bullion is cooled, the slag, matte, and speiss are removed for metal recovery. The bullion is purified by the addition of sulfur which forms a copper sulfide matte sent to a plant for recovery of the copper.

TABLE 27.4 Sulfur Dioxide Concentrations in Copper Smelting, Area Samples

Area	Concentration (ppm)
Reverberatory furnace charging deck	13.2
Reverberatory furnace operators deck	4.4
Converter	4.0
Anode casting	1.3

Source: NIOSH (1975).

TABLE 27.5 Concentrations in Air in Copper Smelting, Personal Sampling[a]

	mg/m^3					
Area	Pb	Zn	ZnO (Calculated)	Cu (Dust and fume)	Cd (Dust and fume)	Mo (Total)
Reverberatory furnace charging deck	0.07	0.12	0.15	3.4	0.005	0.003
Reverberatory furnace operators deck	0.07	0.07	0.09	1.3	0.006	0.03
Converter	0.03	0.04	0.05	0.11	0.004	No data
Anode casting	0.01	0.01	0.01	0.07	0.001	No data
Current OSHA standard	0.05	—	5	Dust 1.0 Fume 0.1	Dust 0.2 Fume 0.1	Soluble 5 Insoluble 15
NIOSH recommended standard	0.15	—	5	Dust 0.04	Fume 0.04	—

Source: NIOSH (1975).

[a] Industry-wide, not representative of any one location.

The second step is the refining of the lead produced by the smelting operation. Several processes for refining the bullion are available. In one process, the bullion is charged to a reverberatory furnace in an oxidizing atmosphere, and arsenic, antimony, and tin are removed. Zinc and silver are recovered by other techniques. In another process, lead is refined electrolytically or by using molten sodium hydroxide and sodium nitrate as a substitute for furnace softening. Silver and gold are recovered from the zinc slag.

Industrial hygiene hazards in lead smelting are similar to those encountered in copper smelting. The crushing and grinding of ore creates a dust hazard that must be controlled by local exhaust ventilation and the use of water for dust suppres-

TABLE 27.6 Lead Smelting Reactions and Exposures

Operation	Purpose	Equipment	Reactions	Workplace Exposures (Emission Concentration)
Sintering	Convert sulfides to oxides and sulfates	Sintering machine 1000°C (1830°F)	$2\ PbS + 3\ O_2 \rightarrow 2\ PbO + 2\ SO_2$	SO_2 (0–6.5% in stream) Lead-containing dust (20–65%)
Smelting	Removes impurities, reduces compounds to Pb (bullion) containing 94–98% Pb and slag	Lead blast furnace	$2\ PbO + 2\ C \rightarrow 2\ Pb + 2\ CO$ $PbO + CO \rightarrow Pb + CO_2$	CO (2%) SO_2 (0.01–0.25%) Siliceous dust Pb dust Other metallic oxides
Drossing	Remove Cu, S, As, Sb, and Ni from solution	Dross kettles	Various	Impurities in bullion Cu, Sn, Bi, As, Cu CdO, Sb CO SO_2 Pb dust

Source: EPA (1977).

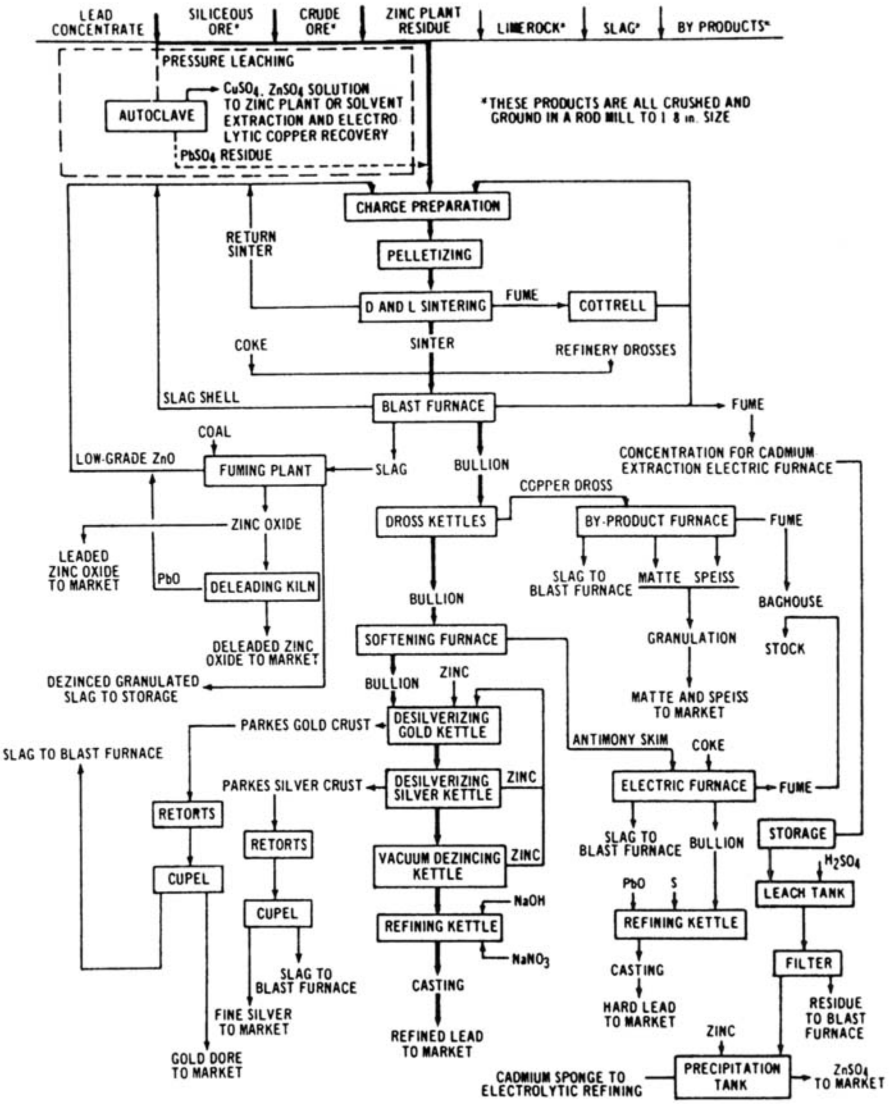

Figure 27.3 A typical flow sheet of pyrometallurgical lead smelting. *Source*: EPA (1977).

sion. These operations can also constitute severe noise hazards. On the other hand, the concentration by flotation process creates little dust exposure, and few workers are involved.

Sintering at high temperature releases the sulfur as sulfur dioxide and results in an exposure in the workplace. The hazards in blast furnace operations are exposure to metal dust, fume, carbon monoxide, sulfur dioxide, and heat stress. Arsenic is also released in this operation.

REFERENCES

Nelson, K. W., Varner, M., and Smith, T. J. (1977), in *Air Pollution*, Vol. 4, 3rd ed., A. C. Stern, Ed., Academic Press, New York.

NIOSH (1975), *Environmental Conditions in U.S. Copper Smelters*, Publ. No. (NIOSH) 75-108, National Institute for Occupational Safety and Health, Cincinnati, OH.

EPA (1977), *Control Techniques for Lead Air Emissions*, Vol. 2, Chapt. 4, Appendix B, Publ. No. EPA-450/2-77-012, US Environmental Protection Agency, Research Triangle Park, NC.

CHAPTER 28

Asbestos Products

28.1 INTRODUCTION

The widespread application of asbestos to building materials, pipe insulation, fireproofing, textiles, and friction products makes it difficult to summarize completely the potential health hazards from this material. Hopefully, the attention given this substance by occupational health researchers will supplement this brief coverage. In 1990, it appeared that a widespread ban on the application of asbestos by EPA would be implemented. However, that ban was rescinded and the use of asbestos continues, although at a markedly reduced annual rate compared to the 1960s.

The types of asbestos used commercially are shown in Table 28.1. Canada is a major chrysotile producing country, with more than 8000 persons employed in mines and mills.The amphiboles, amosite and crocidolite, are mined and processed in South Africa, with a total employment of 15,000. Chrysotile is the most widely used type, representing more than 90% of the total use; crocidolite has been banned in the United States and in the European Community.

28.2 MILL OPERATIONS

Asbestos ore deposits contain from 3 to 30% asbestos. The crushing operations and the various milling operations are shown in Figure 28.1 with the major dust generation points that require local exhaust ventilation (ACGIH, 1973). After primary and secondary crushing by jaw and cone crushers, the stock is dried and stored for processing. In the mill, the rock is taken from storage bins and the fibers are released by mechanical attrition in fiberizers. The stock is then screened, and the airborne mix of fibers and granular material is conveyed to a cyclone where the fibers are separated from the stream and collected as "floats." The granular material collected by the cyclone is classified by fiber length in graders.

TABLE 28.1 Types of Asbestos

Chrysotile
Amphiboles
Amosite
Anthophyllite
Crocidolite
Tremolite
Actinolite

In the initial phases of the mill operation, the bulk material is transferred by mechanical equipment including conveyor belts and skip hoists. Rigorous ventilation control is required at all material transfer points to establish control (Rajhans and Bragg, 1978; ACGIH, 1992). Once the fibers are released, the product flow is achieved by pneumatic conveying, and off-streams, including cyclone exhausts, represent potential dust generation points.

The average air concentrations of fibers in an early six-mill study were 11.0 fibers/ml for crusher and dryer operators, 11.5 fibers/ml for mill operators, and 11.3 fibers/ml for blender, bagger, and packer workers (Schultz et al., 1973).

The physical dimensions of the fiber play an important role in respiratory uptake and the potential for the occurrence of mesothelioma. An impressive study conducted in three mines and six mills in Canada and South Africa has provided comparisons of the size and shape of crocidolite, amosite, and chrysotile (Hwang, 1983). The diameters, lengths, and aspect ratios of all three types shifted upward as the mineral was processed. The median true diameters at the end of mill processes (the bagging area) of airborne crocidolite, amosite, and chrysotile was 0.09, 0.26, and 0.06 μm respectively. The median lengths of crocidolite, amosite, and chrysotile in the bagging area were 1.16, 2.53, and 0.55 μm respectively. The median aspect ratios were 13.2, 8.8, and 8.0 for crocidolite, amosite, and chrysotile.

28.3 PRODUCT MANUFACTURE

The asbestos textile operations in Figure 28.2 are similar to those of the cotton industry and include carding, spinning, twisting, weaving, and braiding. Since the operations are conducted dry with relatively friable fibers, significant dust concentrations may be encountered. The conventional exhaust is typified by the complete enclosure of the card machine shown in Figure 28.3 (Goldfield and Brandt, 1974). Dust concentrations noted in a United Kingdom textile facility in the 1970s ranged from 0.5 to 6 fibers/ml with carding and spinning the dustiest operations (Smither and Lewinsohn, 1973).

A second common use of asbestos is in the manufacture of asbestos–cement pipe and panels. These operations are characterized by the mixing of asbestos, silica, and cement as a slurry that is poured on mandrels or platens and the excess moisture is removed by vacuum. The wet product shape is removed from the form and air cured at an elevated temperature. A conventional pipe-manufacturing process

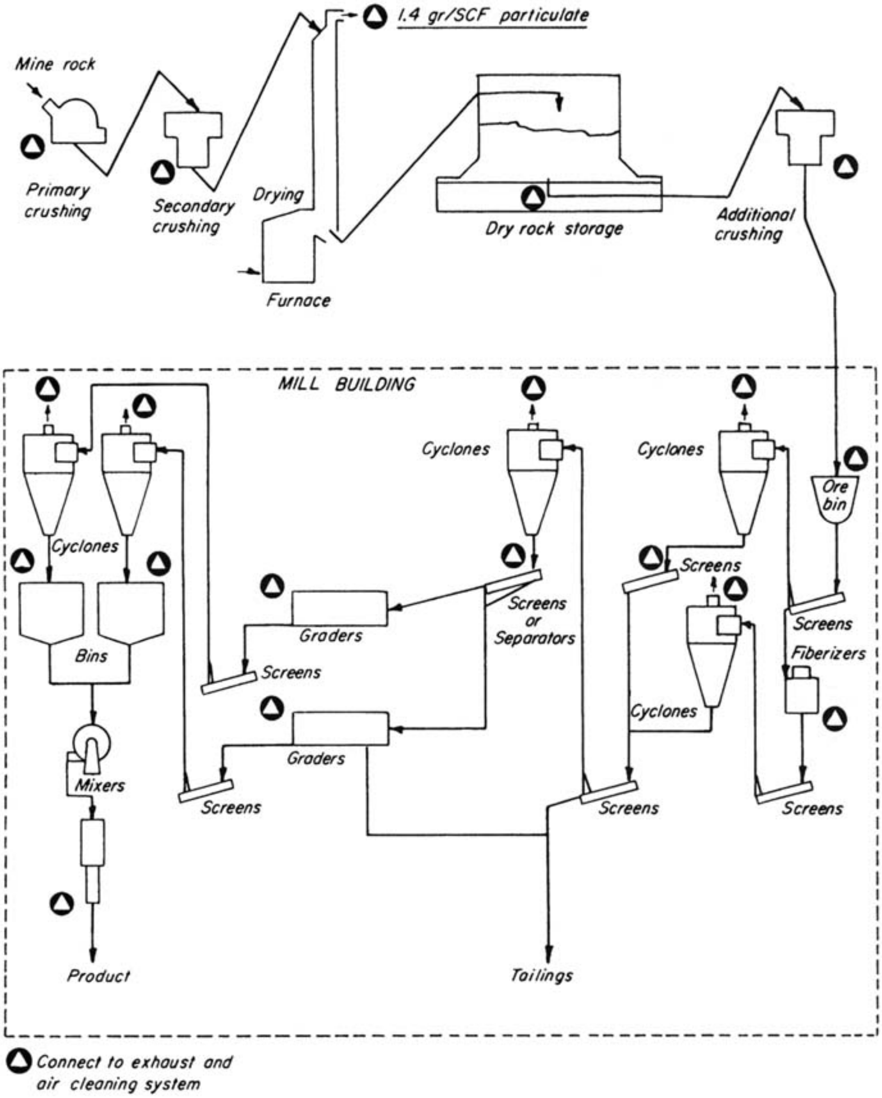

Figure 28.1 Flow diagram for milling of asbestos ores. Source: Courtesy of American Conference of Governmental Industrial Hygienists (1973).

that has all the elements of this type of manufacture is shown in Figure 28.4 (Slwis-Gremer, 1965). The only dry operations, the initial debagging and mixing and the final finishing or machining operations, represent the significant sources of asbestos dust. A NIOSH study of seven asbestos pipe plants shows the highest mean concentration of 6.3 fibers/mL to be in the mixing operation (NIOSH, 1972).

One of the principal uses of asbestos is in the manufacture of vehicle brake friction pads. This operation, shown in Figure 28.5, again presents an initial dust exposure during the mixing of asbestos and the other components (Slwis and Gremer,

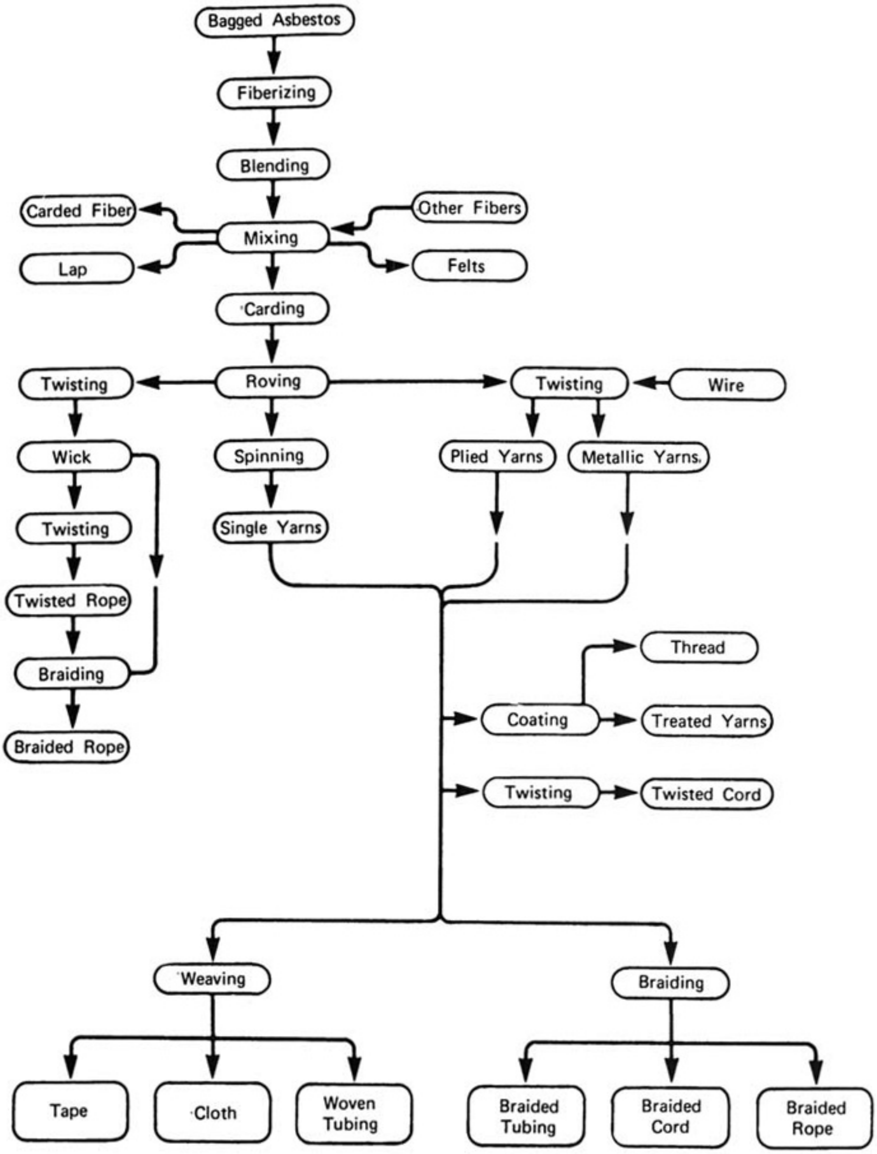

Figure 28.2 Flow diagram for asbestos textile manufacture. Source: Courtesy of Asbestos Textile Institute (1967).

1965). The pad stock is formed in presses and initially cured. It is cut to shape, and a final cure is achieved in an oven. The second major source of asbestos dust exposure occurs during the final finishing operations when the product is ground to dimension and various machining operations, including drilling and countersinking, complete the process. As one would anticipate, the highest asbestos fiber

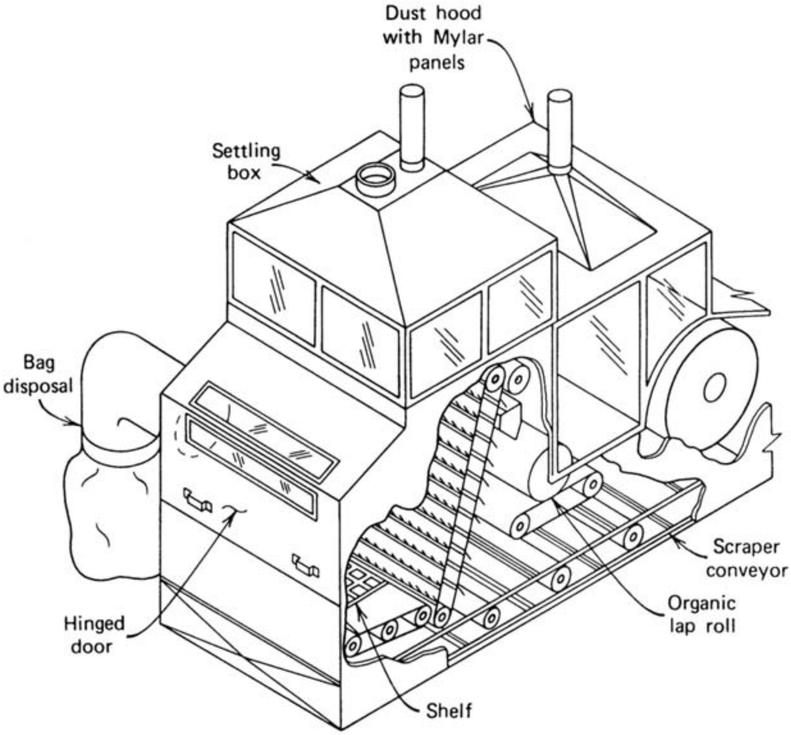

Figure 28.3 Textile card machine feed box. Source: Goldfield and Brandt (1974). Courtesy of *American Industrial Hygiene Association Journal.*

concentrations have been noted in cutting and drilling operations (14.4 fibers/ml) and during the mixing and preparation at the front end of the process (11.0 fibers/ml) (NIOSH, 1972). Again, exhaust ventilation must be applied to such operations as debagging, mixing, and machining. The control of asbestos dust can be accomplished by proper choice of manufacturing method coupled with effective local exhaust ventilation, air cleaning, and work practices. A compilation of guidelines for use in designing local exhaust ventilation systems has been prepared by Rajhans and Bragg (1978).

28.4 FIELD APPLICATION AND CONTROL

The field use of these asbestos products is a matter of great concern. Installation of brake linings at a small garage facility usually is uncontrolled and can result in short-term exposure to high levels of asbestos. The field installation of asbestos insulation at stationary power plants and on shipboard also is difficult to control. In these cases, the control of asbestos taxes the ingenuity of the industrial hygienist. In many situations, control can be achieved by substituting other materials, including fibrous glass and ceramic insulation, for asbestos. The suitability of as-

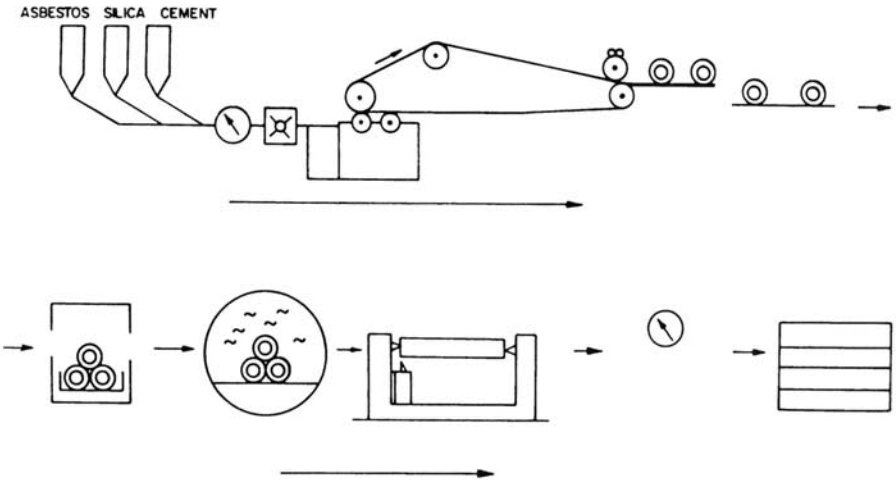

Figure 28.4 Flow diagram for asbestos pipe manufacture. Source: Sluis-Cremer (1974). Courtesy of New York Academy of Sciences.

bestos substitutes depends on their temperature application range, as noted in Figure 28.6 (EEUA, 1969). Product design that minimizes the need for dry forming and machining operations is also important.

The introduction of new techniques for doing a job also can be effective—for example, the use of a preweighed asbestos–cement insulation blend packaged in a plastic bag. Water is added at the job, and the material is hand kneaded. This technique eliminates the open mixing of asbestos cement, which is one of the very dusty jobs in the industry. The introduction of portable low volume–high velocity exhaust systems has made possible the control of asbestos dust from cutting asbestos pipe cover and pads in field operations. Housekeeping and rigorous personal hygiene, including the use of clothing changes and showering, are also necessary to control asbestos. Vacuum cleaning should be used in place of dry sweeping, and other trades should be prohibited from the workspace during active insulation work.

A greater problem exists in the removal of installed asbestos material. Asbestos fibers are released to the air when vinyl–asbestos floor tile is sanded to provide a bonding surface before the floor is recovered (Murphy et al., 1971). In a study of spray buffing of vinyl asbestos tile, Edwards et al. (1994) found that airborne asbestos levels as determined by transmission electron microscopy, were increased during buffing. The application of sprayed asbestos for fireproofing structural steel in the 1960s has resulted in ceilings and walls that are covered with a loosely bonded asbestos blanket that can release fibers. If this material is applied to the air supply plenum surfaces in a building, it may result in a low-level asbestos exposure to occupants. Removal of the material, encapsulation, or mechanical enclosure is difficult and expensive, but may be necessary. The removal or "rip-out" of degraded insulation from high-pressure steam lines can also result in significant short-term exposures. Wet methods of removal are helpful in controlling this problem (Fontaine and Trayer, 1975).

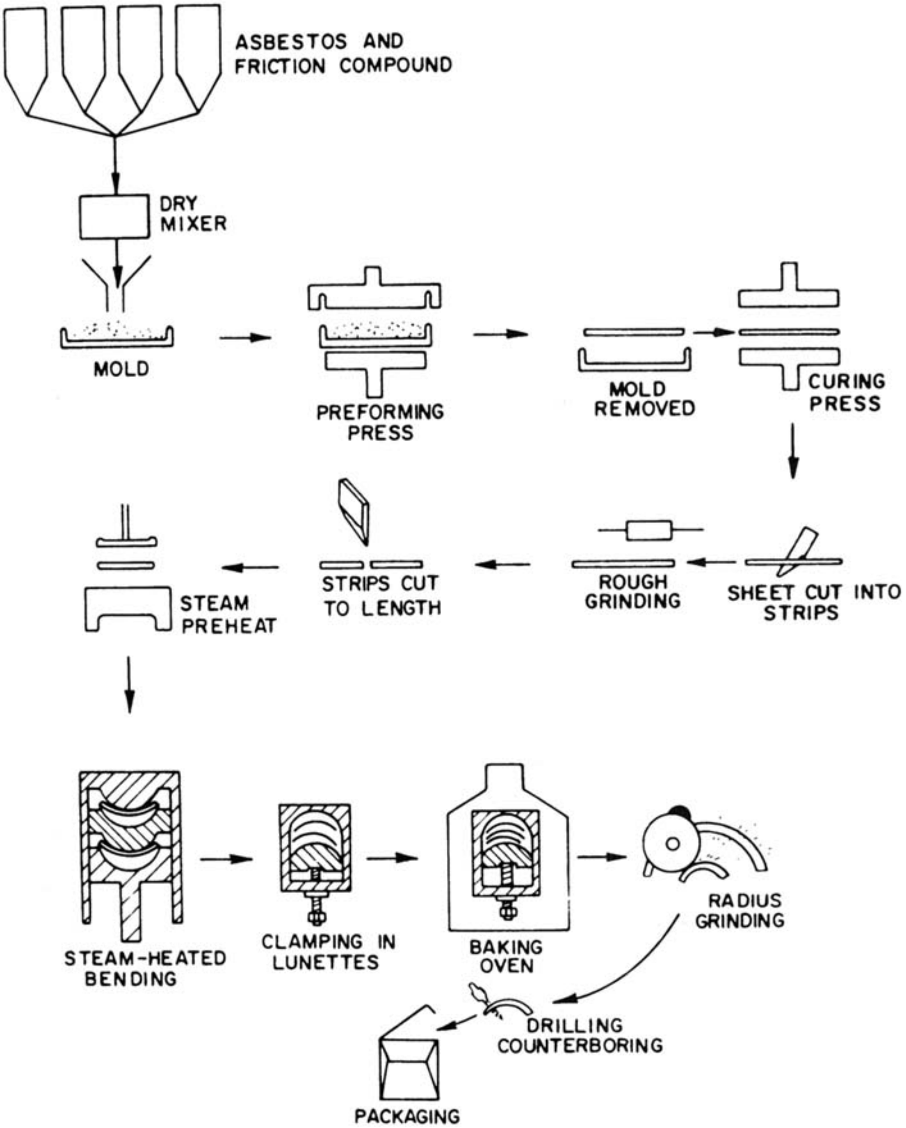

Figure 28.5 Manufacture of automobile brake pads. Source: Sluis-Cremer (1975). Courtesy of New York Academy of Sciences.

Currently, rip-out of asbestos is done with complete protective clothing and either a full-facepiece, air-purifying respirator or a powered air-purifying respirator, with a tight-fitting respiratory inlet enclosure. Heavy work in such protective ensembles results in heat stress which can be monitored by heart rate or body core temperature.

The mandate by EPA in the 1980s requiring agressive action in the removal of asbestos in American schools has resulted in a new cadre of workers with signif-

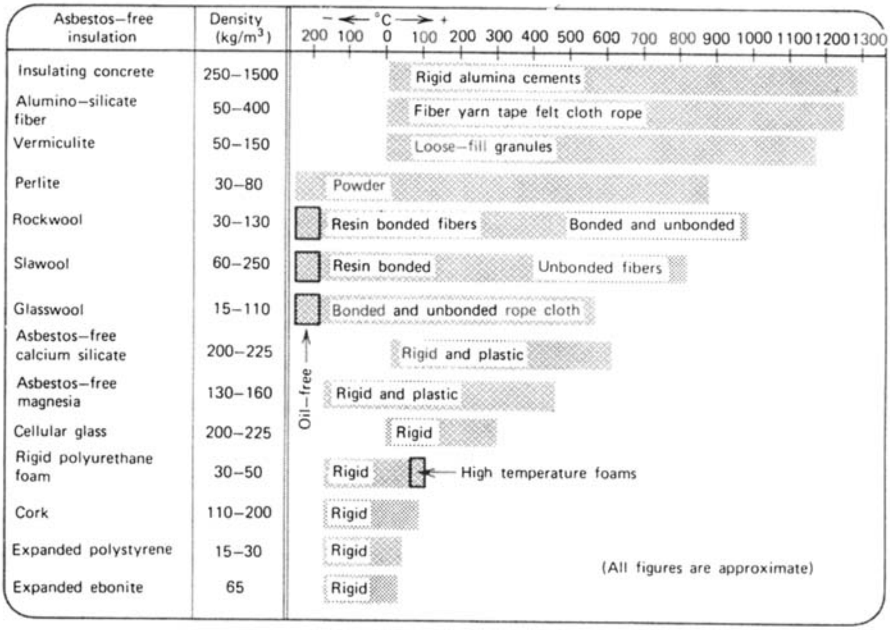

Figure 28.6 Substitutes for asbestos. Source: Courtesy of the Engineering Equipment Users Association, London, England.

icant exposure to high concentrations of asbestos fibers. The need for rip-out in many of these circumstances has been aggressively attacked and the debate continues on appropriate action in handling deteriorating asbestos in our nation's buildings. It would appear that encapsulation and enclosure may be appropriate in many instances.

REFERENCES

ACGIH (1973), *Process Flow Diagrams and Air Pollution Emission Estimates*, American Conference of Industrial Hygienists, Cincinnati, OH.

ACGIH (1992), *Industrial Ventilation: A Manual of Recommended Practice*, 16th ed., American Conference of Industrial Hygienists, Cincinnati, OH.

Asbestos Textile Institute (1967), *Handbook of Asbestos Textiles*, 3rd ed., Pampton Lakes, NJ.

Edwards, A., Kominsky, J. R., and Freyberg, R. W. (1994), *Appl. Occup. Environ. Hyg.*, **9**, 132–138.

EEAU (1969), *Recommendations for Handling Asbestos, Handbook No. 33*, Engineering Equipment Users Association, London.

Fontaine, J. and Trayer, D. (1975), *Am. Ind. Hyg. Assoc. J.*, **36**, 126–131.

Goldfield, J. and Brandt, F. (1974), *Am. Ind. Hyg. Assoc. J.*, **36**, 799–808.

Hwang, C. Y. (1983), *Brit. J. Ind. Med.*, **40**, 273–279.

Murphy, R. L., Levine, B. W., Al Bazzaz, F. J., Lynch, J. J., and Burgess, W. A. (1971), *Am. Rev. Resp. Dis.*, **104**, 576–580.

NIOSH (1972), *Criteria for a Recommended Standard—Occupational Exposure to Asbestos*, Publ. No. 72-10207, National Institute for Occupational Safety and Health, Cincinnati, OH.

Rajhans, G. S. and Bragg, G. M. (1978), *Engineering Aspects of Asbestos Dust Control*, Ann Arbor Science, Ann Arbor, MI.

Schultz, L. A., Bank, W., and Weems, G. (1973), *Airborne Asbestos Fiber Concentrations in Asbestos Mines and Mills in the United States*, Technical Progress Report 27, US Bureau of Mines, Pittsburgh, PA.

Sluis-Cremer, G. (1965), *Ann. NY Acad. Sci.*, **132**, 215–234.

Smither, W. J. and Lewinsohn, H. C. (1973), in *Biological Effects of Asbestosis*, International Agency for Research on Cancer, Lyon, France.

CHAPTER 29

Asphalt Products

29.1 INTRODUCTION

The term “asphalt” applies to a naturally occurring deposit or a product recovered from crude petroleum by a refinery process. The material can be separated into three groups: asphaltenes, resins, and oils. The resins form a cover over the particulate asphaltenes, and the paraffinic, naphthenic, or naphtha-aromatic oils are the suspending oils. The great bulk of asphalt is now obtained from petroleum, and the refinery process permits production of material ranging from viscous liquids to solids.

In the United States, straight petroleum asphalt is used. In Europe, however, coal tar pitch is used to dilute the petroleum-based asphalt. The difference in toxicity between these asphalts is significant since the coal-derived products contain much higher concentrations of polycyclic aromatic hydrocarbons than the petroleum-derived materials. As is noted below, the asphalts used in road and roofing products in the United States are air-blown to improve their performance. The IARC (1989) has concluded that there is inadequate evidence to prove the carcinogenicity of undiluted (not diluted with coal-derived asphalt) air-refined bitumens in experimental animals. However, steam-distilled asphalts have demonstrated carcinogenicity. Since there continues to be concern about the potential carcinogenicity of asphalts, it is prudent to conduct medical evaluations of workers who handle petroleum-derived asphalts.

A summary of handling procedures for asphalts based on petroleum asphalt “cut” with coal tar pitch from Sanderson and Jelfs (1978) is noted below. Although the level of hazard connected with asphalts in the United States is not as great as the hazard for the European products for which these guidelines were prepared, precautions do seem appropriate for all asphalts based on present knowledge.

1. Avoid prolonged and repeated skin contact with bitumen materials.
2. Wear suitable protective clothing, especially gloves, and do not wear heavily soiled garments. Dry cleaning is recommended for soiled clothing.
3. Never put dirty rags or towels in pockets.
4. Remove bitumen contamination from the skin by thorough washing with skin cleanser and warm water. Wash hands thoroughly before and after going to the lavatory. Kerosene and other solvents must not be used for normal skin cleansing purposes.
5. Obtain medical advice if any skin changes are noticed, particularly if these occur in areas that have been exposed to bitumen–coal tar products.

29.2 PAVING PLANTS

A major use of petroleum asphalt is in paving products for roads and runways. Since the final product cannot be shipped long distances, a large number of paving plants of the type shown in Figure 29.1 are scattered throughout the United States. Sand and gravel, the major aggregates, are quarried near the plant and dumped directly into hoppers by truck or the aggregate is stockpiled and transferred to hoppers by crane or front-end loaders.

The granular material is dried in an oil- or gas-fired rotary drier. The hot aggregate is screened and held in a bin directly over the mill. When a truckload of asphalt is to be prepared, a given blend by weight of aggregate, filler such as fly ash, limestone, or Portland cement, and hot asphalt from a heated asphalt storage tank are dumped into the mixer and blended for 1–2 min. The blended mix is dropped into a truck for transport to the paving site.

During this sequence the operator of the plant may have a serious heat, noise, dust, and asphalt fume exposure, depending on the design of the facility and the availability of enclosed, air-conditioned control rooms. Equipment operators may be exposed to significant dust concentrations if they operate with open cabs. Maintenance personnel may have serious exposures to heat, noise, dust, and asphalt fume exposure depending on the design of the facility equipment. The health hazard from the exposure to mineral dust depends on the free silica content of the rock and sand. Air concentration data are not available in the open literature on asphalt paving plants. The principal dust control technique is local exhaust ventilation at the material transfer points identified in Figure 29.1 (ACGIH, 1992, Burgess et al., 1989).

29.3 ROOFING PLANTS

A second major application of asphalt is the production of asphalt roofing products. In this process, originally felted paper and more commonly a fiberglass mat are impregnated with asphalt, coated with mineral granules to improve weather-

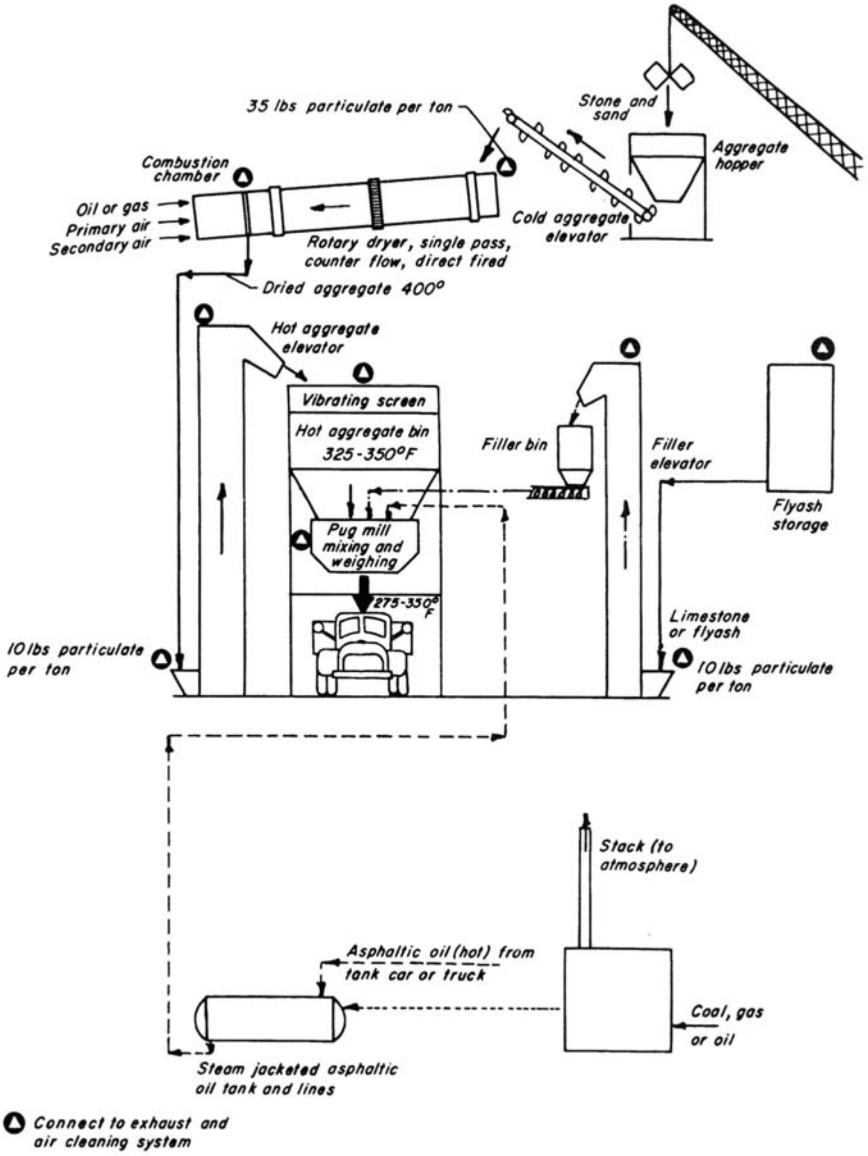

Figure 29.1 Flow diagram for an asphalt paving plant. Source: ACGIH (1973). Courtesy of the American Conference of Governmental Industrial Hygienists, Cincinnati, OH.

ing characteristics, and cut to form conventional roof shingles, roll covering, or sidewall shingles. The impregnant is a petroleum asphalt prepared at the plant site by "air blowing." In this process, air is bubbled through liquid asphalt for 8–16 hr to oxidize the asphalt, increase its melting point, and improve its weathering durability.

A schematic of a continuous roofing product manufacturing line is shown in Figure 29.2. Four component preparation lines meet to form the final product: rock dust, mineral granules approximately 1–2 mm in diameter, mat, and asphalt. The mat is fed from an unwind station to a saturator where it is impregnated by asphalt spray, dip, or in some cases by both techniques, as shown in Figure 29.2. The impregnated mat is dried on steam-heated drums and is fed to a wet looper or accumulator. The saturation process usually results in worker exposure to asphalt fumes. Control normally is achieved by an enclosed canopy with roof exhauster.

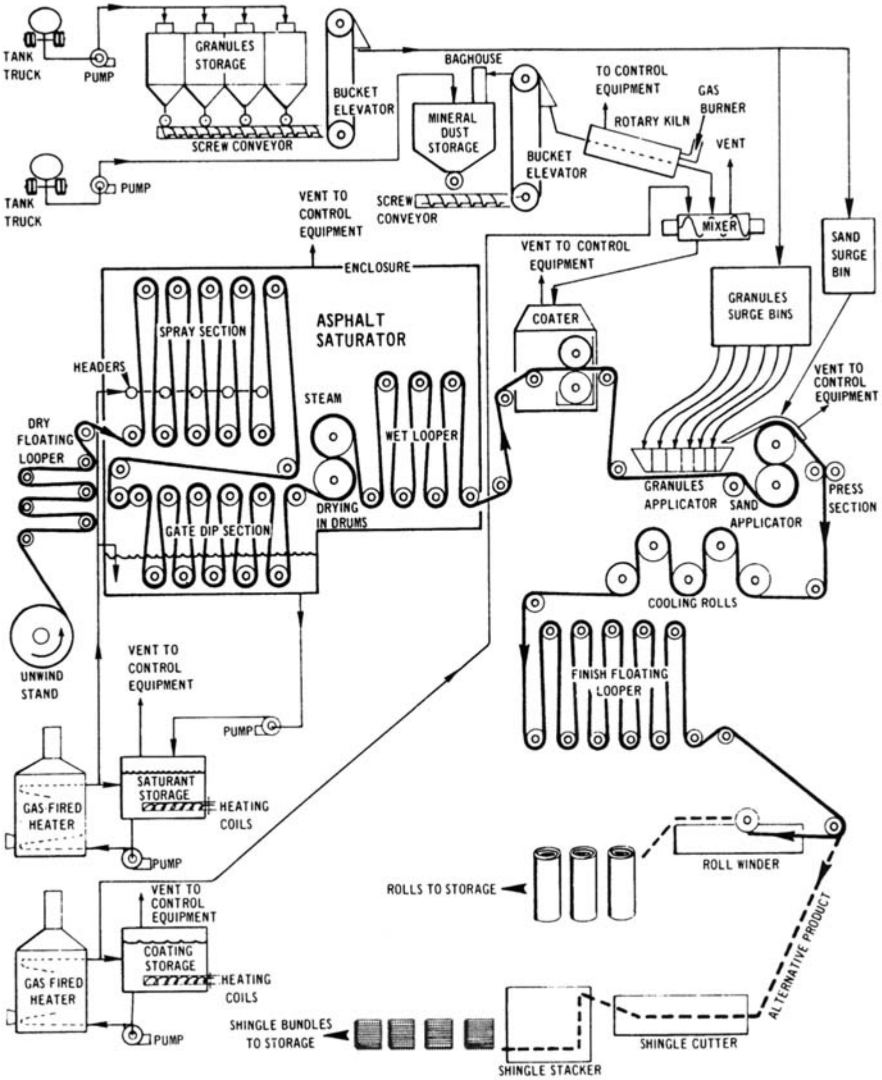

Figure 29.2 Schematic of a continuous roofing product manufacturing line. Source: Danielson (1973).

The warm asphalt is then "filled" with mineral dust obtained as a by-product during crushing of the granules. Talc, soapstone, mica, or sand is applied to the rear of the mat to keep it from sticking. The filled mat then passes to a granule applicator station where pigmented granules are pressed into the dust-filled asphalt on the mat. These two operations may be dusty, and involve dust exposure to the range of minerals used in the coater and granule applicator. After cooling, the continuous roll is cut to form either roll roofing or shingles.

The acceptable exposure limit to mineral dust depends on its mineralogical identity and its crystalline silica content. If special fillers such as asbestos and fibrous glass are used, these exposures must be evaluated. If talc is used as an antisticking agent on the rear of the product, it should be evaluated to ensure that it is nonfibrous and to determine its free silica content. Nonasbestos talcs with less than 1% free silica are available for this application. The adhesive used to seal one shingle to another on the roof is applied in the plant and its composition should be identified. In many cases it is merely a dab of asphalt.

In a NIOSH Health Hazard Evaluation of an asphalt shingle plant, air samples were collected for asbestos, crystalline silica, formaldehyde, asphalt, aromatic hydrocarbons, and total aliphatic hydrocarbons (NIOSH, 1978). The percentage of crystalline quartz in respirable dust samples taken on various operations in this roofing plant ranged from 0 to 33.3%; the percentage in the total dust samples was 49.8–55.5%. The respirable dust concentrations on the granule application and tab seal operations varied from 0.13 to 0.20 mg/m^3 and, for total dust, 0.89–3.1 mg/m^3. Asphalt fume concentrations on these operations were 3.25 and 2.10 mg/m^3; however, the authors stated that additional sampling demonstrated serious inconsistencies in the sampling procedure. Aromatic hydrocarbons were not detected and total aliphatic hydrocarbon (C7–C12) concentrations on the coaters were 3.4 and 5.2 mg/m^3 and on the saturator coating, 4.8 and 25.4 mg/m^3. The authors state that the content of polynuclear aromatic hydrocarbons in petroleum-based asphalts are highly variable and found only in trace amounts. Benz(a)pyrene (BAP) and benz(a)anthracene were found in microgram per cubic meter levels in the saturator. BAP was found in two out of seven samples in the general work area (0.35 μg/m^3 and 0.10 μg/m^3).

Asphalt processes in roofing plants release dense white clouds of hydrocarbon oils, which must be controlled by local exhaust ventilation at the asphalt storage tanks, saturator, drying drums, and wet looper. Dust from the sand, mica, and talc used in the process may require ventilation control at the coater and granule applicator. The saturators, drying-in drums, and wet loopers are usually ventilated by enclosure-type hoods. Air cleaning in the form of incinerators and scrubbers is required.

REFERENCES

ACGIH (1973), *Process Flow Diagrams and Air Pollution Emission Rates*, Committee on Air Pollution, American Conference of Governmental Industrial Hygienists, Cincinnati, OH.

ACGIH (1992), *Industrial Ventilation, A Manual of Recommended Practice*, 21st ed., Committee on Industrial Ventilation, American Conference of Governmental Industrial Hygienists, Cincinnati, OH.

Burgess, W. A., Ellenbecker, M. J., and Treitman, R. D. (1989), *Ventilation for Control of the Work Environment*, Wiley, New York.

Danielson, J., Ed. (1973), *Air Pollution Engineering Manual*, 2nd ed., Publ. No. AP-40, GPO, Washington, DC.

IARC (1989), *IARC Monograph on the Evaluation of Carcinogenic Risk of Occupational Exposures in Petroleum Refining*, Vol. 47, International Agency for Research on Cancer, World Health Organization, Switzerland.

NIOSH (1978), Health Hazard Evaluation Report No. 77-56-467, National Institute for Occupational Safety and Health, Cincinnati, OH.

Sanderson, J. T. and Jelfs, E. C. G. (1978), *Med. Bull. Exxon Corp.*, **38**, 27.

CHAPTER 30

Abrasive Products

30.1 INTRODUCTION

The application of abrasives for heavy-duty cleaning of metal surfaces, machining, grinding, buffing, and polishing is discussed in Chapter 3; the manufacture of the abrasive grains and products is discussed here. The abrasives commonly in use in modern industry are shown in Table 30.1. The naturally occurring abrasives have been replaced to a major degree by two synthetic abrasives, aluminum oxide (Al_2O_3) and silicon carbide (SiC). These are used in loose granular form for abrasive blasting, in bonded grinding wheels for dimensional and nondimensional work, and in coated products such as abrasive paper and cloth. Two specialty abrasives, industrial diamonds and cubic boron nitride, are coated in a thin layer in a soft metal matrix for grinding hard metals and other abrasives.

A number of epidemiologic studies have been conducted to define the effects of exposure in the abrasive industry. Shaver and Riddell (1947) first reported that pulmonary fibrotic changes and emphysema occurred in aluminum oxide abrasive workers. It was not definitely shown if the causal agent was aluminum oxide or the silica fume produced in the process. A number of recent studies have shown that aluminum oxide acts as an inert dust when inhaled.

A proportional mortality study of more than 1000 workers in a single plant manufacturing abrasive wheels and coated products from granular aluminum oxide and silicon carbide revealed excess deaths from digestive cancer and respiratory disease (Wegman and Eisen, 1981). The plant work involved crushing bulk abrasives, sizing and grading the abrasive grains, and the subsequent molding and firing of abrasive wheels in both vitreous and organic bonding materials of the types described in Chapter 3.

TABLE 30.1 **Natural and Synthetic Abrasives**

Abrasive	Formula	Manufacturer Identification
Natural		
Quartz	SiO_2	Silica sand, sandstone, flint, tripoli
Natural aluminum oxide	Al_2O_3	Corundum, emery
Iron oxide	Fe_2O_3	Rouge, crocus
Synthetic		
Aluminum oxide	Al_2O_3	Alundum, aloxite
Silicon carbide	SiC	Carborundum, crystolon
Diamond	Pure C	Man-made
Cubic boron nitride	BN	Barozon

In a review of the health status of 171 men who worked in a silicon carbide manufacturing facility, Peters et al. (1984) found chest X-ray abnormalities and a decrement in pulmonary function. A study by Osterman et al. (1989) revealed a dose-dependent relationship between sulfur dioxide exposure and respiratory complaints including phlegm, wheezing, and dyspnea. Dufresne et al. (1993) found that silicon carbide workers have chest radiograph abnormalities and reduced pulmonary function. A correlation between quartz exposure and respiratory disease was not shown. The authors reviewed the fibrogenic activity of silicon carbide fibers found in abrasive manufacturing facilities and hypothesized that the fibers have the potential to induce interstitial lung disease.

30.1 PRODUCTION OF ABRASIVE GRAINS

Aluminum oxide is made by calcining bauxite (aluminum oxide ore) to remove water and then firing the bauxite in an electric furnace with coke and iron chips that purify the batch. After the material is fired at a temperature of 2040°C (3700°F), the fused mass or pig is crushed, granulated, and sized for a given abrasive product. The product has a range of colors from the purest white to yellow, green, and blue, depending on the metal compounds added to improve cutting properties. The potential hazards in the manufacture of aluminum oxide include exposures to carbon monoxide, particulates, heat, and noise.

The description of the manufacture of silicon carbide by Smith et al. (1984) is the basis for the following discussion. The principal operations are shown in Figure 30.1. As noted, the raw materials are crystalline silica, sawdust, and petroleum coke. After appropriate sizing and drying, the three materials are mixed and become the new mix charge for the furnace. The Acheson furnaces are powered by a low voltage–high current, dc supply through powdered graphite placed in a strip within the new mix charge (Figure 30.2). Old mix, which is the residue from previous processes not converted to silicon carbide, contains 80% sand and 20% low-grade silicon carbide. The carbon from the coke and the silica react to produce silicon carbide and carbon monoxide. Since the petroleum coke contains sulfur, the reaction products include sulfur dioxide.

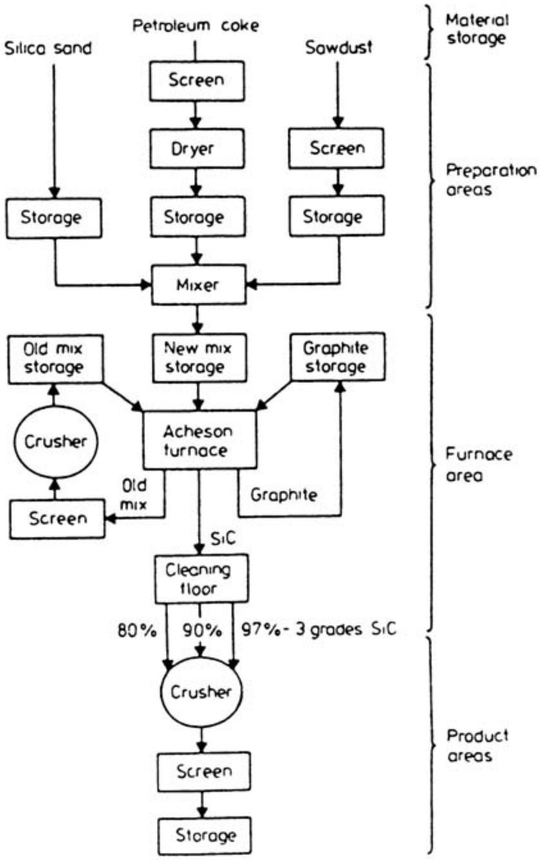

Figure 30.1 Flow diagram for production of silicon carbide. Source: Smith et al. (1984). Courtesy of *British Journal of Industrial Medicine.*

A plethora of hydrocarbon species are formed by the pyrolysis of the coke in a manner which Smith et al. liken to that produced in coke ovens. After firing, the furnaces are disassembled by removing the sides and the silicon carbide is removed in large lumps to be broken up with jackhammers for subsequent crushing and sizing. The color of the abrasive varies from green to black depending on the impurities present. The graphite is reused and the part of the charge that is not converted to silicon carbide becomes the old mix for the next run. Smith et al. state that this process has not changed in over 50 years.

Diamond and boron nitride are extremely hard specialty abrasives that have up to 100 times the life of aluminum oxide and silicon carbide. The diamond abrasive material is formed by heating graphite and a catalyst such as nickel to 1500–2000°C (2730–3630°F) at 6.5–9 MPa. Cubic boron nitride is formed from hexagonal boron nitride with a lithium compound as a catalyst at 2000°C (3630°F) under

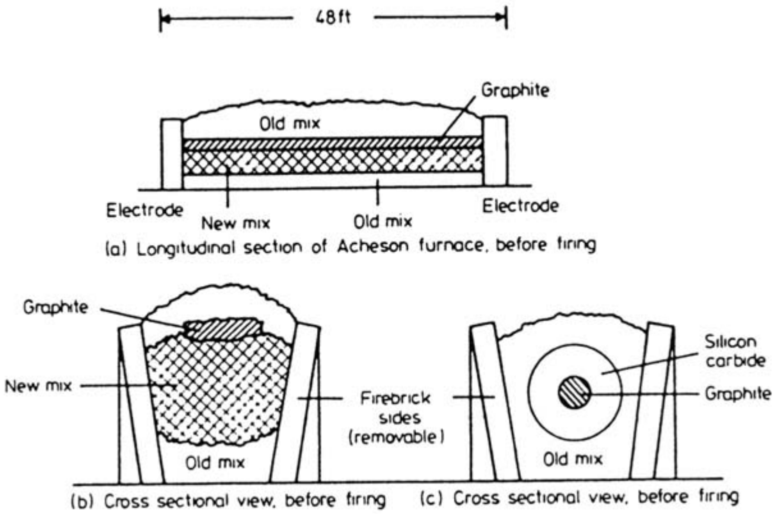

Figure 30.2 Firing of silicon carbide in an Acheson furnace. Source: Smith et al. (1984). Courtesy of *British Journal of Industrial Medicine.*

8 MPa pressure. In the open literature, no data on the potential health hazards from these operations are available.

30.3 ABRASIVE PRODUCTS

Silicon carbide and aluminum oxide may be formed into abrasive grinding wheels by various bonding techniques, the most common of which are vitrified and resinoid bonds. To manufacture a vitrified bonded wheel, the abrasive is mixed with clay or feldspar. This mix is then poured into a mold, pressed to shape, and fired at 430–650°C (800–1200°F) to form a structurally strong wheel with a glass or ceramic bonding matrix. The batch material for resinoid wheels shown in Table 30.2 includes the abrasive and a resin such as phenol-formaldehyde. The blended material is pressed to shape and heated at 160–200°C (320–390°F). The cured rough wheels are then trued or dressed to shape and a center bushing is added using lead or babitt metal.

The coated abrasive products are manufactured by applying the abrasive grains to paper or cloth covered with hide glue or phenolic resin. As noted in Chapter 3, polishing wheels are flexible disks of laminated cloth or leather and the abrasive is added to the perimeter surface of the wheel using a resin glue to bond the abrasive. The potential exposures include particulates and the volatile components from the adhesive system.

During the manufacture of abrasive products there may be exposure to clays and fillers, such as feldspars in the manufacture of vitrified bonded wheels, and

TABLE 30.2 Typical Materials for Resinoid Wheel

Solids
- Olivine sand
- Synthetic cryolite
- Quicklime
- Litharge
- Activated charcoal
- Abrasive granules
- Resins
  - Phenolic resin
  - Thoric acid
  - Potassium sulfate
  - Iron pyrite

Liquids
- Furfural
- Creosote
- Liquid resins
  - Polymerized phenol-formaldehyde
  - Free phenols
  - Sodium hydroxide catalyst

Source: NIOSH (1975).

shellac, rubber, and various resins systems in the production of resinoid and other bonded wheels. Strict ventilation control of dust should be maintained during crushing, grinding, and screening of the bulk abrasive as well as in the edging, facing, and shaving of grinding wheels. A dermatitis problem may exist depending on the resin systems and adhesives in use.

30.4 EXPOSURE ASSESSMENT

Smith et al. (1984) conducted a comprehensive review of personal exposures of various air contaminants in the manufacture of silicon carbide. The sulfur dioxide concentrations varied depending on the sulfur content of the petroleum coke. It ranged from less than 0.1 to 1.5 ppm. The respirable particulate exposures ranged from 0.01 to 9.0 mg/m^3 with the bulk of the particulate believed to be silicon carbide. The quartz concentrations were less than the occupational exposure limit of 100 μg/m^3. Polycyclic aromatic hydrocarbons were present, but quantitative assessment of their concentration was not made. The average carbon monoxide concentrations ranged from 10 to 25 ppm, although short-term concentrations exceeded 100 ppm in the overhead crane.

REFERENCES

Dufresne, A., Loosereewanich, P., Harrigan, P., Sebastien, P., Perrault, G., and Begin, R. (1993), *Am. Ind. Hyg. Assoc. J.*, **54**, 327–330.

NIOSH (1975), Health Hazard Evaluation Report No. 73-18-171, National Institute for Occupational Safety and Health, Cincinnati, OH.

Osterman, J. W., Greaves, I. A., Smith, T. J., Hammond, S. K., Robins, J. M., and Theriault, G. (1989), *Brit. J. Ind. Med.*, **46**, 629–635.

Peters, J. M., Smith, T. J., Bernstein, L., Wright, W. E., and Hammond, S. K. (1984), *Brit. J. Ind. Med.*, **41**, 109–115.

Shaver, C. G. and Riddell, A. R. (1947), *J. Ind. Hyg. & Tox.*, **29**, 145–157.

Smith, T. J., Hammond, S. K., Laidlaw, F., and Fine, S. (1984), *Brit. J. Ind. Med.*, **41**, 100–108.

Wegman, D. H. and Eisen, E. A. (1981), *J. Occup. Med.*, **23**, 748–754.

CHAPTER 31

Glass Products

31.1 INTRODUCTION

Nearly every element in the periodic table has been utilized in modern glass technology, and the hazards associated with each have been experienced. The major ingredient of all glass, however, is still silica sand. The common glasses such as soda–lime–silica glass, lead–potash–silica glass, and borosilicate glass contain, in addition to silica sand, the following major constituents: limestone, soda ash, salt cake, lead oxide, boric acid, and crushed glass. Minor constituents include arsenic, antimony, fluoride salts, salts of chromium, cobalt, cadmium, selenium, and nickel, sodium silicafluoride, and rare earths. Soda-lime glass represents 90% of the glass produced in the United States.

Since the major component of each batch of glass is sand, this material would seem to present a potentially serious silicosis hazard. In most cases, however, washed sand is used, with a substantial portion of the fine particles removed. It is common to find that airborne dust from the mixed batch contains only from 1–5% crystalline silica. Although silicosis is rare in modern glass plants, the methods of handling certain types of sand can still present a dust hazard. The manual unloading of dry sand from boxcars may produce dangerous quantities of fine dust. When wet-washed sand is obtained in hopper cars and unloaded by gravity or pneumatically in a totally enclosed system with exhaust ventilation, exposure is minimal. In modern plants, preblended batch materials are obtained in hopper cars, thereby eliminating dust exposure from in-plant handling and mixing.

In the manufacture of optical glass and certain decorative glasses, lead is an important source of employee exposure. Handling of this material, usually in the form of lead oxide, requires personal hygiene procedures and the use of local exhaust ventilation with appropriate air cleaning. The other major constituents of glass do not normally present a health hazard, although dermatitis may occur.

The minor constituents have caused adverse health effects, with arsenic the principal offender. Perforation of the nasal septum or severe skin effects due to exposure to arsenic and to highly alkaline constituents of the batch were common occurrences in the past. Modern methods of handling and ventilation control have eliminated most of these problems.

31.2 GLASSMAKING*

The various types of glass manufactured in the modern glass industry are made by two processes: the pot process or the more modern, and now common, tank method. The pot process now serves mainly for the manufacture of high-quality glass, such as optical and mirror glass, and for small quantities of specialty glass. In the past, the pot process was responsible for the major portion of the silicosis in the glass industry from refractory dust since pot melting of glass necessarily introduces the hazard of hand shoveling and filling of the pots. Optical and specialty glasses frequently contain heavy metals such as lead, barium, and manganese. Close attention must be given to potential exposure to these toxic materials during the hand-filling process. The tank process permits enclosed, continuous feeding of batch ingredients, thereby reducing dust exposure at the batch end of the tank. With the introduction of the more efficient tank melting system, the hazards of the pot melting process have been eliminated.

The refractory blocks and bricks used in the construction and repair of the furnaces and tanks contain free silica. Silica brick contains tridymite as its principal constituent. When evaluating the exposure to such dusts during furnace installation and repair, care should be taken to determine the air concentrations of tridymite and cristobalite as well as quartz. In the past, furnace blocks and parts were cut to fit at the installation site by contract personnel with minimum dust control. Now, large, well-ventilated, mechanized shops are used to prefabricate refractory furnace parts, which are shipped to the furnace site for installation. Only occasional cutting should be done at the construction site under present day methods.

Glass objects may be formed by blowing, pressing, casting, rolling, and drawing and also by a float method. After forming, all glass objects must undergo a process of annealing to reduce internal stresses in the formed object. This is accomplished in most cases by introducing the objects into long, continuous, annealing chambers called lehrs. Because of their size and the quantity of heat generated, the furnaces introduce a major heat problem.

*Section 31.2 on glassmaking was adapted from material written by the late J. Dunn for *Patty's Industrial Hygiene and Toxicology*, Wiley, New York, 1963.

After the glass has been formed and annealed, it is frequently finished by labeling, smoothing of rough edges, and other processes. Glass grinding is usually done by wet processes using abrasives such as silicon carbide. Polishing is done wet with synthetic abrasives as the polishing agent. Glass dust itself is not toxic, since silica is in the combined or silicate form. Abrasive blasting is sometimes done in enclosed exhausted cabinets with nonsiliceous abrasive materials. Application of decorative enamels by spraying or silk-screen processes introduces the possibility of exposure to solvent vapors, which must be controlled by exhaust ventilation.

In summation, the dust hazards in conventional glass manufacture are associated principally with the handling of bulk materials in specialty or small-run pot production. Tank processes do not, in general, present hazardous dust concentrations. The major dust hazards are the quartz sand and special additives listed in Table 31.1.

The concentration of furnaces and the handling of the molten glass do present a heat stress hazard in the industry, primarily due to the radiation load on the worker. This industry was one of the first to apply quantitative heat stress indices to identify the heat load to the worker and to demonstrate the importance of reflective shielding to reduce heat stress.

Selected workers in this industry, including those who operate furnaces and ovens, have a significant IR exposure. A study of the Swedish glass industry indicates that glass workers with an IR exposure have an increased risk of vision impairment due to cataracts and a 12-fold risk that an operation for cataracts will be necessary (Lydahl and Philipson, 1984).

TABLE 31.1 Glass Additives

Process	Materials
Color	Salts of Chromium Cobalt Cadmium Manganese Nickel Selenium
Remove bubbles	Salts of Arsenic Antimony
Accelerate melting	Fluorine Calcium fluoride Sodium silicafluoride
Improve optical properties	Rare earth metals Thorium

31.3 FIBROUS GLASS

31.3.1 Health Effects

In general, studies of the health status of fibrous glass workers has not demonstrated interstitial fibrotic changes nor decrement in pulmonary function. An ongoing retrospective study of a large population of fibrous glass workers has demonstrated a small increase in respiratory cancer (Enterline, 1991). A European cohort of 25,000 in a study of man-made mineral fibers showed increased lung cancer in only the rock and slag wool workers and not in fibrous glass workers (Simonato et al., 1987). The IARC chose to classify fibrous glass as Group 2B, that is, possibly carcinogenic to humans (IARC, 1988). Occupational exposure limits are now under review in an attempt to appropriately weight the following factors: durability in physiologic fluids, respirable size, and aspect ratio.

To meet federal mandates on wastewater discharge, fibrous glass plants in the United States started to recirculate cooling and wash water in the mid-1970s. This procedure resulted in high concentrations of gram negative bacteria in the water and correspondingly, a significant exposure to airborne endotoxin from the mist generated in the manufacturing process. Endotoxins are a class of lipopolysaccharide molecules that are a component of the outer membrane of gram negative bacteria. They are commonly identified as lipopolysaccharides (LPS) or simply as endotoxins. Since gram negative bacteria flourish in the fibrous glass washwater, the membrane debris of the bacteria including the endotoxin will also be present. In other industries where workers have been exposed to endotoxin concentrations in excess of 10 ng/m^3, there have been outbreaks of "mill fever" and "humidifier fever" involving flu-like symptoms with chest tightness and pulmonary function decrement. There is also evidence that exposures to endotoxins may cause chronic obstructive lung disease and emphysema. A study in the early 1990s has determined that respiratory disease is present in the fibrous glass work population and is probably due to endotoxin exposure (Milton et al., 1993).

31.3.2 Processes

In the manufacture of glass fibers for textiles, gas or oil-fired regenerative furnaces melt and refine the batch materials. The molten glass is then fed to a forehearth and through a bushing or orifice plate to extrude a fiber of a given size. The organic binders or "sizes" applied to the fibers prevent fiber abrasion and act as bonding agents. The product is then cured or annealed in a furnace and wound on a spool as a continuous fiber or yarn.

Fibrous glass wool products used for insulation and acoustical treatment are formed by air, steam, or flame blowing or by a centrifugal forming technique (Figure 31.1). The binder is applied to the hot product and then it is collected on a flat moving bed and conveyed to a curing oven. A schematic of the major equipment for both the flame jet and centrifugal forming of fibers is shown in Figure 31.2.

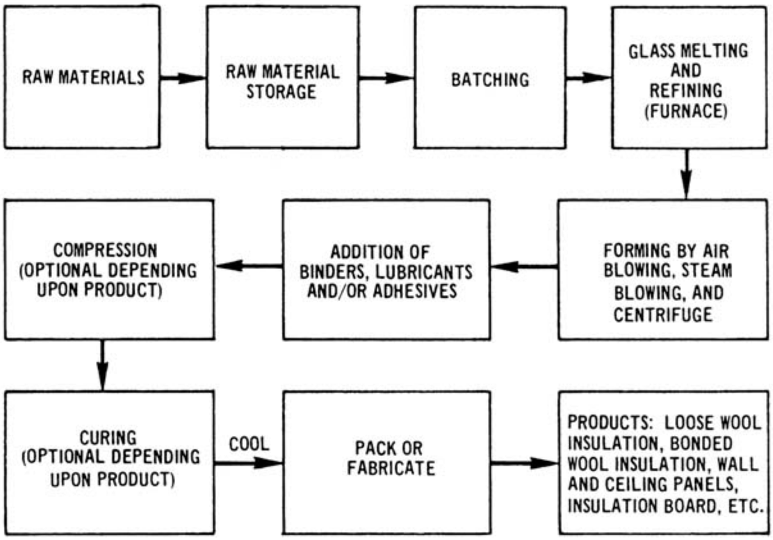

Figure 31.1 Typical flow diagram of wool-type glass fiber production process.

The borosilicate glass, the type commonly used for fibrous wool manufacture, is conveyed pneumatically from storage silos to mixers; minor components are loaded manually to the batch. The mixed material is charged to the furnace. The glass is formed at 1370°C (2500°F) and fed to a refractory tank, or forehearth, where it is held at 1230°C (2250°F). In the flame jet process (Figure 31.2), the molten glass flows through a bushing plate located at the bottom of the forehearth and forms a large-diameter filament. This primary fiber is heated by a gas flame and the fiber diameter is established by tension on the filament. Once the fiber diameter is established, it is cooled with water, a phenol-formaldehyde binder (Table 31.2) is sprayed on the moving fiber bundle, and the fibers are collected as a blanket on a moving grate. If the product is to be used for home insulation, it is cured at 200–260°C (400–500°F) in an oven; other product lines may not be cured.

In the centrifugal process (Figure 31.3), fibers are formed by feeding the glass from the forehearth to centrifugal spinners where the fiber is forced out of small orifices in the spinner head. The fiber is blasted with cold air or cooling water to attenuate it, the binder is sprayed on the fiber, and the mat of fibers collected on a conveyor grate is cured in an oven at approximately 260°C (500°F).

Pipe insulation, air ducts, and other products are formed from the fibrous mat described earlier. Loose fibrous material is collected and processed through breakers, blenders, and cards to form a low-density web that can be coated with a powdered resin. A mat is formed and the product is cured.

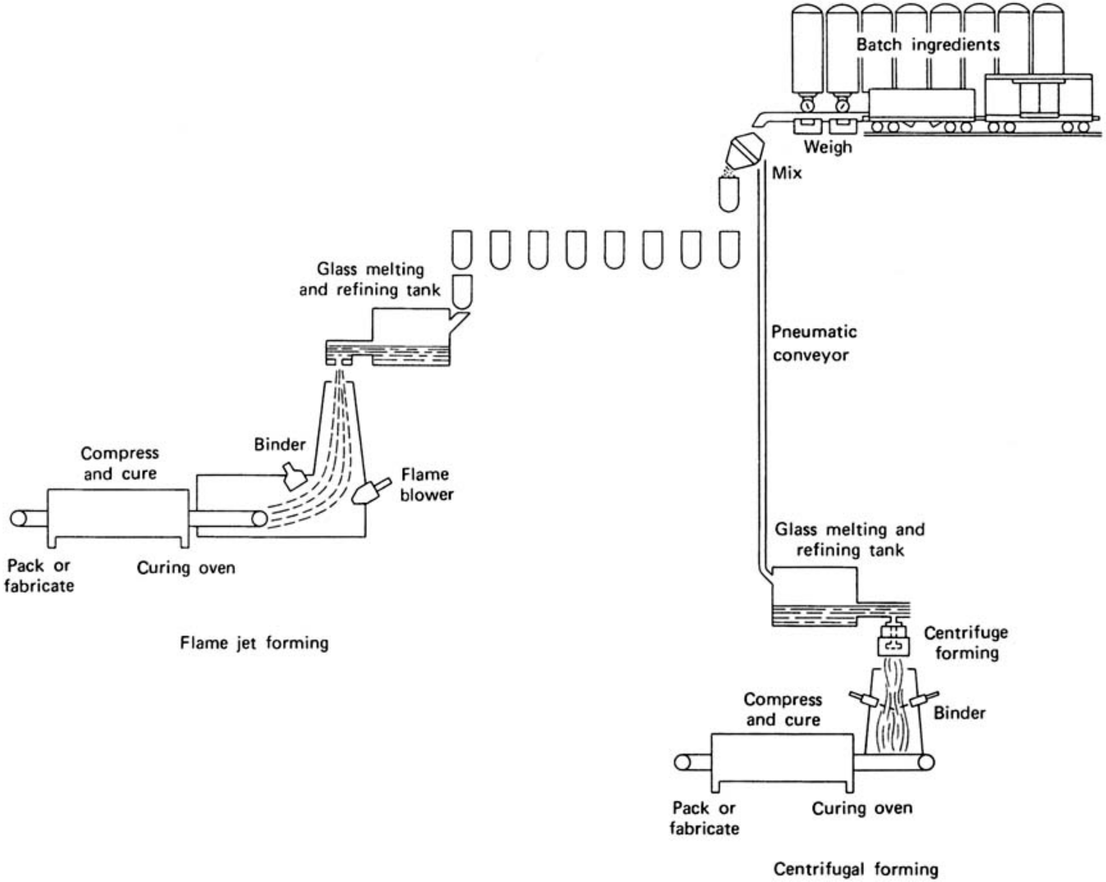

Figure 31.2 Schematic of glass-forming operations. Source: Courtesy of P. Reist.

TABLE 31.2 Composition of Binder

Constituent	Amount
Water	80–97%
Resin	2–20%
Urea	0.5–8%
Formaldehyde (free)	0.1–0.5%
pH	8–9

Source: Reprinted with permission of M. Walters (1993).

31.3.3 Exposures and Control

Esmen et al. (1979) conducted a major survey of particulate fiber concentrations in fibrous glass plants and their data are summarized in Table 31.3. Organic vapors and gases may also be airborne during curing; their composition depends on the composition of the binder and the spraying technique used to coat the fibers with binder. Fluoride concentrations vary based on the type of flux used in the operation. Combustion products from furnaces depend on the fuel in use and may include sulfur dioxide and carbon monoxide.

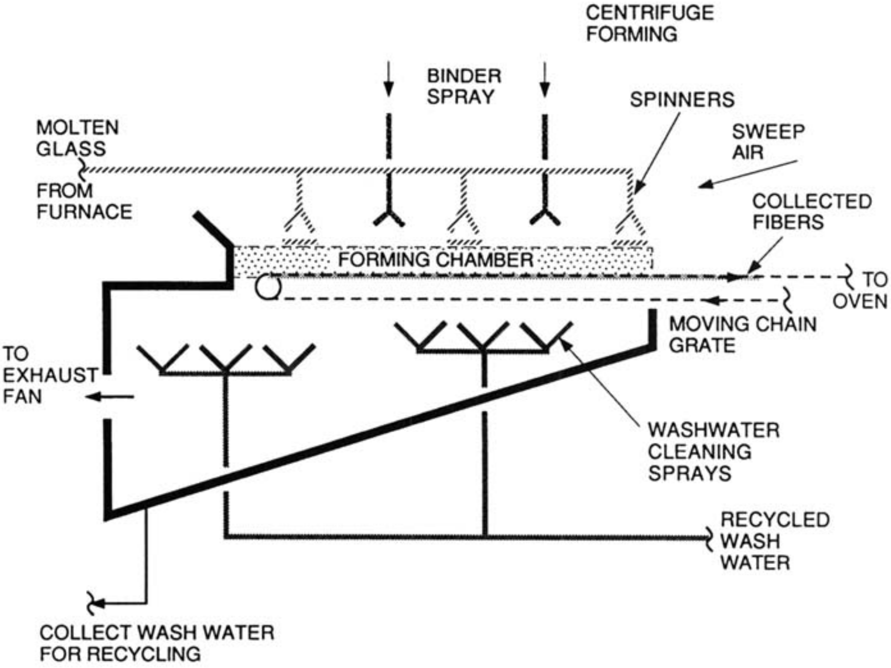

Figure 31.3 Forehearth and forming chamber. Source: Adapted from Walters (1993).

TABLE 31.3 Employee Exposure to Dust and Fibers in Glass Fiber Plants

			Concentration Ranges	
Plant	Fiber Diameter (μm)	Fiber Product Type	Total Suspended Particulate Matter (mg/m^3)	Fibers (fibers/cm^3)
1	1–12	Continuous	0.89–1.12	0.0094–0.25
3	3–6	Loose	0.65–0.46	0.035–0.10
4	1–6	—	1.24–2.26	0.042–0.077
6	5–15	Continuous, loose	0.60–1.04	0.012–0.032
9	7–10	Consumer products	1.33–1.02	0.017–0.014
10	6–16	Continuous consumer products	1.07–0.91	0.002–0.0032
12	6–115	Continuous loose	0.21–0.16	0.012–0.017
14	6–13	Continuous consumer products	1.42–1.21	0.037–0.031
15	0.05–1.6	Consumer products	0.75–0.67	0.78–2.1
16	6–10	Consumer products	1.07–1.02	0.04–0.12

Source: Esmen et al. (1979). Reprinted with permission of American Industrial Hygiene Association.

When the molten glass is spun into fibers in the forehearth area (Figure 31.3), the fibrous glass is sprayed with cooling washwater and phenol/urea formaldehyde resin solution. At this time there are major releases of washwater mist and binder mist. The contaminants in the washwater, which will be present in the mist, are shown in Table 31.4. There is containment of this mist as plant air is pulled across the forehearth into the forming chamber. The newly formed glass fibers are pulled by vacuum and deposited on the moving chain grate. Washwater is used to wash the fiberglass fibers or wool from the forming grate and chamber walls so that air flow can be maintained in the forming chamber. This washwater becomes contam-

TABLE 31.4 Washwater Composition

Constituent	Amount
Water	94–99%
Solids	0.5–6%
Phenolic resin	0.4–5%
Formaldehyde (free)	500–1500 ppm
pH	7.5–8.5
Biocide	0–500 ppm
Bacteria	10^6–10^9 CFU/ml
Endotoxin	5–300 μg/ml

Source: Reprinted with permission of M. Walters (1993).

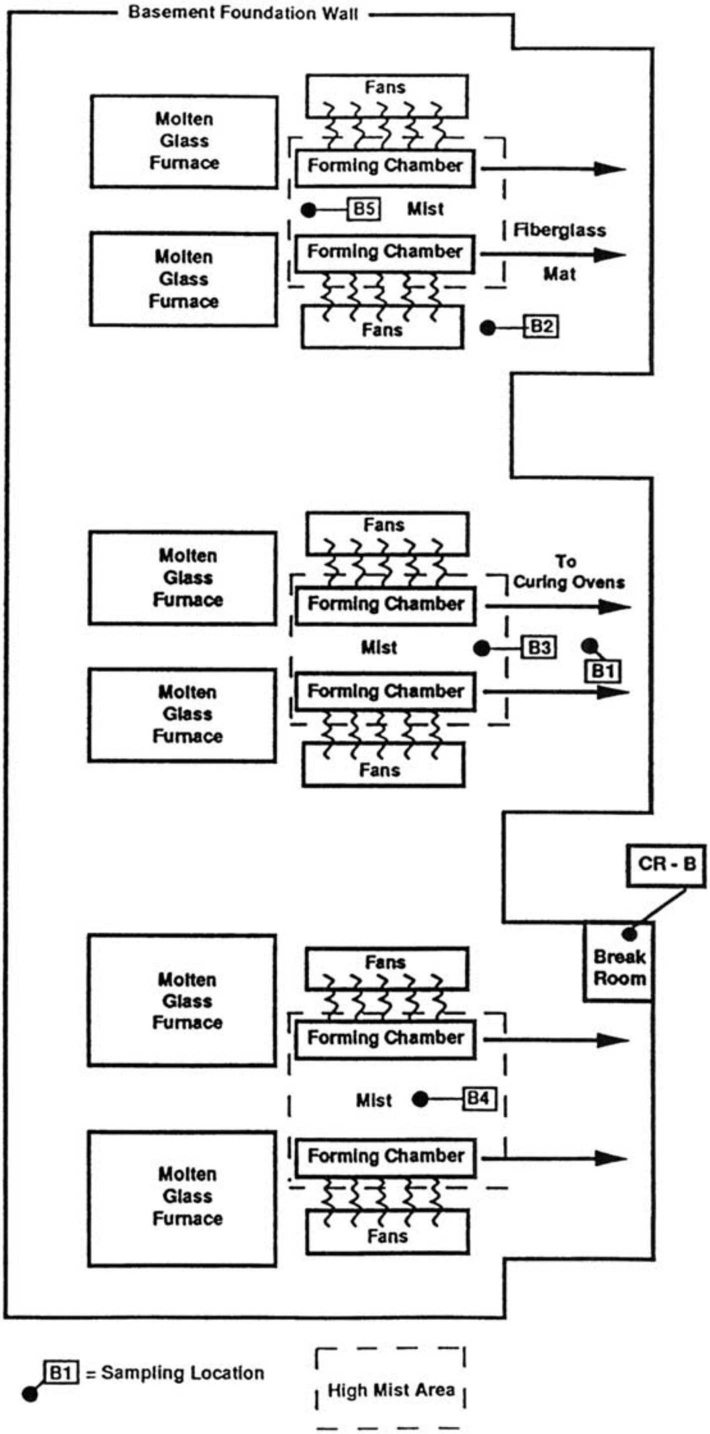

Figure 31.4 Floor plan of a six-furnace fibrous glass manufacturing facility. Source: Courtesy of M. Walters (1993).

inated with excess binder. In a study conducted by Walters (1993), the exposures to a number of air contaminants, including the resin components and endotoxin in the mist, were determined. The typical exposure of the worker in the forehearth–forming chamber area of the plant in Ohio (Figure 31.4) included airborne endotoxin concentrations of about 25 ng/m^3, phenolic resin of 30 μg/m^3, and formaldehyde from the resin system of 75 μg/m^3. Walters notes that there were major day by day variations in this plant.

A principal control for particulate emissions at the front end of the process is local exhaust ventilation at all material transfer points and debagging stations. The forming stations also require exhaust ventilation for particulate control and curing ovens must be controlled to minimize exposure to phenol and formaldehyde. In fabrication areas where molded and formed products are manufactured, the particulate exposures must be controlled by ventilation.

Noise levels in the range of 90–100 dBA exist in the furnace area of glass plants originating from high-velocity air and gas flow. Furnace rooms and certain product forming areas present serious heat stress conditions frequently exceeding current recommended values.

REFERENCES

Enterline, P. E. (1991) *Ann. Rev. Public Health*, **12**, 459–480.

Esmen, N., Corn, M., Hammad, Y., Whitter, D., and Kotso, N. (1979), *Am. Ind. Hyg. Assoc. J.*, **40**, 108–117.

IARC (1988), *Man-Made Minerals Fibers and Radon*, International Agency for Research on Cancer, Lyon, France.

Lydahl, E. and Philipson, B. (1984), *Acta Opthal.*, **62**, 976.

Milton, D. K., Reed, C. E., Amsel, P. L., Enright, L. R., Brown, L. R., Aughenbauch, G. L., and Morey, P. R. (1994), In press *Am. Rev. Resp. Dis.*

Simonato, L., Fletcher, A. C., Cherrie, J. W., Andersen, A., Bertazzi, P., Charnay, N., Claude, J., Dodgson, J., Esteve, J., Frentzel-Beyme, R., Gardner, M. J., Jensen, O., Teppo, L., Winkelmann, R., Westerholm, P., Winter, P. D., Zocchetti, C., and Saracci, R. (1987), *Ann. Occup. Hyg.*, **31**, 603–623.

Walters, M. (1993), Doctoral thesis," Worker Exposure to Endotoxin and Other Contaminants in Fiberglass Insulation Manufacturing," Harvard School of Public Health, Cambridge, MA.

CHAPTER 32

Ceramic Products

32.1 INTRODUCTION

Ceramic consumer and construction products ranging from common architectural tile to elegant dinner china are manufactured using a variety of ceramic raw materials and processes. In the United States about 35,000–40,000 persons are employed in this industry. Three product lines—brick, sanitary ware, and pottery—are briefly described to illustrate the manufacturing techniques and the health hazards that exist in the industry. The major health hazards arise from the exposure to dusts and airborne mist containing silica.

32.2 BRICK

Various ceramic construction products are manufactured in small facilities throughout the United States. The most common products are brick and tile; however, plants producing clay pipe and other construction materials have similar workplace exposures.

A flow diagram showing the common steps in the manufacturing process for bricks is presented in Figure 32.1 (Buringh et al., 1990). The principal raw materials are clay and shale, which are usually quarried in an open pit. The quartz content of these minerals may range from 20 to 40%. The exposures in quarrying operations are described in Chapter 25 and include mineral dust, vibration, noise, and both hot and cold temperature extremes. The bulk clay and shale are usually crushed initially at the mining site; further size reduction and classification are conducted at the plant. The secondary crushing and screening operations involve multiple transfer points that represent dust sources. In addition,

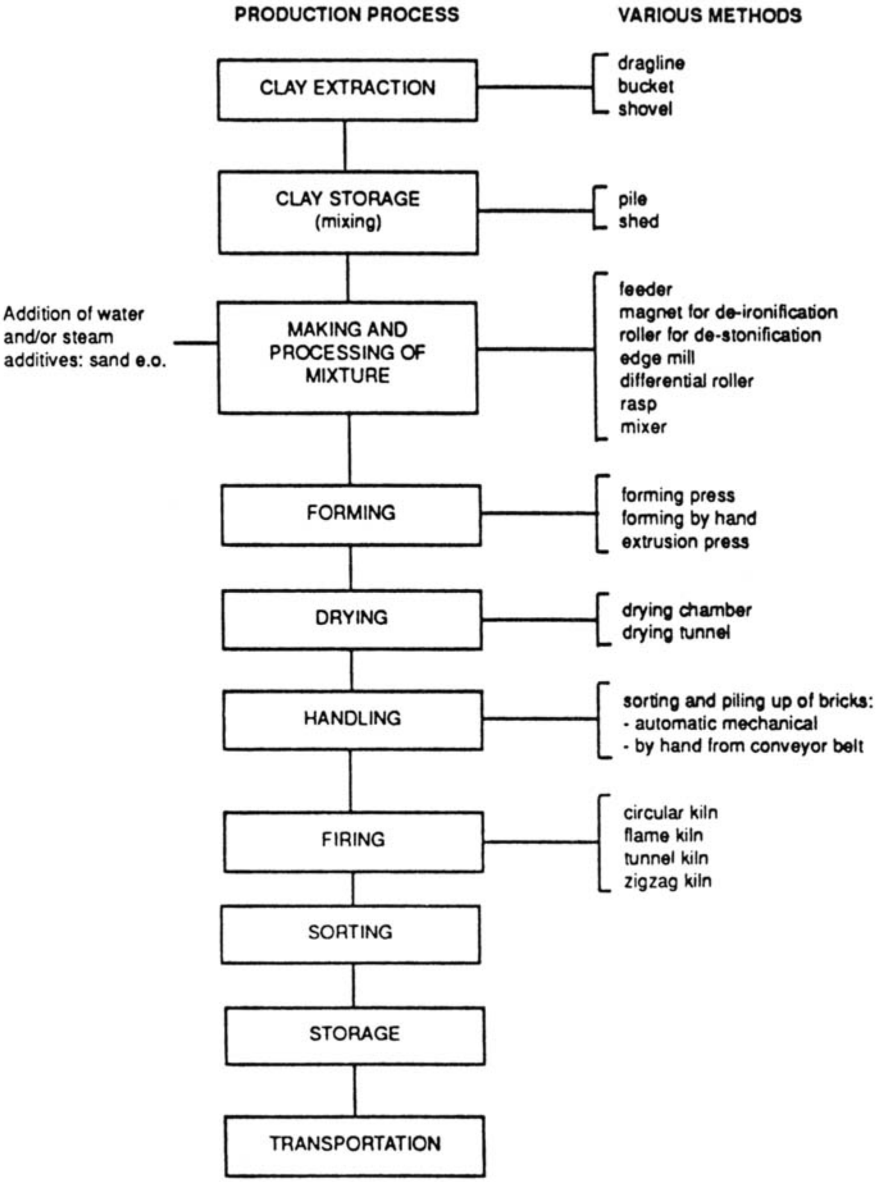

Figure 32.1 Flow diagram of a brick manufacturing process. Source: Buringh et al. (1990).

unless maintenance is excellent, fugitive leaks from equipment will also contribute to worker dust exposures. The obvious control is local exhaust ventilation at all transfer points and a continuous preventive maintenance program. The significance of the dust exposure depends principally on the quartz content of the clay or shale.

The raw material is formed into brick by either a dry or wet process. In the dry process, the fine granular material is slightly moistened and injected into molds at pressures of 3.5–12.4 MPa (500–800 psig) (EPA, 1973). The resulting cohesive form is fired directly in a kiln. In the more common stiff-mud process, water is added to the clay in a pug mill to make a thick plastic mass. The mud is then extruded through a rectangular die. A wire cutter chops the continuous extrusion into brick-length forms that are air dried and fired in a kiln. The forming and cutting operation involves a dust exposure during charging of the mill, but once the water is added, dusting is minimal.

The kiln is fired by gas or oil, depending on the geographical region in which the plant is located. Firing of brick at maximum temperatures of 1090°C (2000°F) for 50–100 hr evaporates free water, dehydrates the mass, oxidizes available material, and vitrifies the product. At the kiln location, the major hazards are noise from the burners, heat stress principally from radiation, and exposure to carbon monoxide and sulfur dioxide from the products of combustion.

The exposure to sand and clay containing quartz was evaluated in four Dutch brickyards (Buringh et al., 1990). In the initial visit to the plant by the investigators, personal air sampling for both respirable mass and respirable quartz showed that concentrations exceeded the Netherlands exposure limit of 150 $\mu g/m^3$ in three out of four plants. A series of recommendations were made for more efficient dust control in the plants exceeding the standard and selected controls were implemented in two plants. The cooperating plants showed significant dust reductions after the controls were put in place, as shown in Table 32.1. As a part of this study, a dust suppression technique using water mist was evaluated and found to reduce dust concentrations below the occupational exposure limit in all cases. The authors state that reductions in dust concentrations by factors of 4–10 are found if mist is applied to the drying pallets before they are turned, to the dried unfired brick at the overturn point, and to waste on the conveyor belt.

TABLE 32.1 Dust Reduction in Dutch Brickyard

Breathing Zone	Respirable Dust (mg/m^3)	Stationary Site	Total Dust (mg/m^3)	Respirable Dust (mg/m^3)
Cleaner	(i) 0.9	Clay processing	(i) 2.1	0.5
	(ii) 0.8		(ii) 1.5	0.3
Loader	(i) 1.1	Press	(i) 15.4	1.6
	(ii) 0.6		(ii) 4.3	0.4
Press operator	(i) 1.4	Tracks 1	(i) 6.3	0.8
	(ii) 0.6		(ii) 1.4	0.3
		Tracks 2	(i) 4.8	0.6
			(ii) 1.0	0.2

Source: Adapted from Buringh et al. (1990).

(i) Before controls implemented; (ii) after controls implemented.

32.3 SANITARY WARE

The health hazards involved in the manufacture of vitreous china products such as lavatory sinks and toilet bowls and tanks and the effectiveness of dust control technology are well described in a study by Cooper et al. (1993). A baseline study of respirable crystalline silica exposures in a small New Jersey plant employing 150 workers was conducted under a NIOSH field program. A follow-up study was conducted three years later to review the impact of the control technology that was implemented following the first visit.

The major steps are glaze and slip preparation, casting and molding, spraying of glaze, fettling or trimming and smoothing, and firing in a kiln. The raw materials include clay (hydrated aluminum silicate), feldspar (alkaline aluminum silicate), and flint (crystalline silica). The characteristics of these minerals are identified in Appendix E. A liquid clay slip is formed by mixing the granular materials with water in a blunger or mixer. This slip is pumped to the casting shop where it is poured into plaster molds and allowed to harden for an hour or so before the molds are removed from the castings. The castings are then trimmed and smoothed and the molds are reassembled and dusted with a parting compound (similar to a foundry operation) for the next pouring. If the casting is trimmed within a few hours, it is said to be work on a green casting. Since the green casting is moist, little dust is generated when it is cleaned. If it is held for an extended period (2–3 days), the casting dries out and it is identified as a white casting. The length of the drying period has a great impact on the dustiness of the smoothing and trimming operation on white castings. After the trimming operation, the parts are dried an additional day or two, one or more coats of glaze are applied in a spray booth, and the products are fired in a kiln. The glaze is purchased in a premixed form from a vendor.

In the initial plant survey, the NIOSH investigators utilized both personal and fixed location air sampling to identify both baseline respirable crystalline silica concentrations and respirable mass concentrations. The respirable crystalline silica concentrations, the most critical measurements, are presented in Table 32.2. For a discussion of the respirable mass results, please review the original paper; the authors note that the respirable mass concentrations track the respirable crystalline silica concentrations. In the first survey, 95% of the personal and fixed location air samples exceeded the OSHA PEL for silica of 100 $\mu g/m^3$. A number of specific recommendations made by the NIOSH team were implemented by the plant. A resurvey three years later demonstrated impressive reductions in respirable crystalline silica concentrations to one-fifth to one-tenth of the original concentrations (Table 32.2). In only one area, the glaze department, did the samples exceed the PEL.

The recommendations that the investigators made were both feasible and effective. In the slip house, the raw materials were originally transferred from a storage silo to the mixer with a front end loader. In both the loading and unloading operations visible dust was noted. In the second survey the front end loader was replaced with a pnueumatic transfer system which reduced respirable crystalline silica concentrations by 92%.

TABLE 32.2 Respirable Crystalline Silica Concentrations in a New Jersey Sanitary Ware Plant

	Respirable Crystalline Silica (μg/m^3)						
	Base (Initial Survey)			After Implementing Controls (Follow-up Survey)			
Department	GM	UCL[a]	LCL[b]	GM	UCL[a]	LCL[b]	Change in GM (%)
Personal samples							
Casting	130	150	110	27	41	17	–79
Glaze spray	220	290	170	34	49	24	–85
Glaze prep	150	270	88	179	870	37	+17
Area samples							
Slip house	250	730	84	21	37	12	–92
Casting	98	140	67	11	16	8	–89
Glaze spray	73	140	39	15	25	9	–79
Glaze prep	160	1000	25	12	23	7	–93

Source: Cooper et al. (1993). Reprinted with permission of American Industrial Hygiene Association.

[a] UCL: Upper 95% confidence level.

[b] LCL: Lower 95% confidence level.

In the original survey the molds were dusted with a powder containing 20–25% crystalline silica, the castings were permitted to dry before trimming was done, and poor housekeeping was noted in the area. A nonsilica parting compound was introduced, all white (dry) castings were wet down before trimming, and limited housekeeping improvements were made. As a result, air sampling in the second survey showed a reduction in respirable crystalline silica concentrations of 89% in the casting area. None of the samples exceeded the occupational exposure limits.

The respirable crystalline silica concentrations in the glaze spray areas were reduced by 79% by increasing the face velocity of the spray booths, patching leaks in the ventilation system, and eliminating man cooler fans which caused disruptive air drafts at the face of the spray booths. Although the respirable crystalline silica concentrations were reduced by 94% in the glaze preparation area, one-half of the samples exceeded the OSHA PEL of 100 μg/m^3. This was due in part to the refusal of plant personnel to implement ventilation on a bag-dumping station and to improve the method of charging the pebble mills.

This well-documented case study does validate both the feasibility and effectiveness of conventional dust control measures not only in sanitary ware production, but in all operations discussed in this chapter. It does highlight the question of why these controls are not universally used in the American ceramics industry. One possible solution is the educational format employed in England which clearly defines the control technology necessary to protect ceramic workers from silica exposure (CICA, 1992).

32.4 POTTERY

The flow diagram for pottery manufacture shown in Figure 32.2 is specifically for the manufacture of table china; however, it includes all the steps encountered in any ceramic manufacturing operation. The conventional raw materials include a variety of clays that may contain free silica or quartz, flint, that is, 100% quartz, and feldspar. These materials are mixed with water in a blunger to form "slip." The slip is screened to remove foreign objects and it may be passed over magnets to remove iron particles. The pottery parts are formed by throwing, casting, spreading in a mold, dry pressing, or extrusion. After drying, the rough part is trimmed or "fettled" using knives, sandpaper, or rags. The underside of the ware is sprayed with a mineral oxide coating, dried, and fired in a kiln (box or tunnel furnace). The part is cleaned mechanically or by sandblasting, a final glaze made from frit

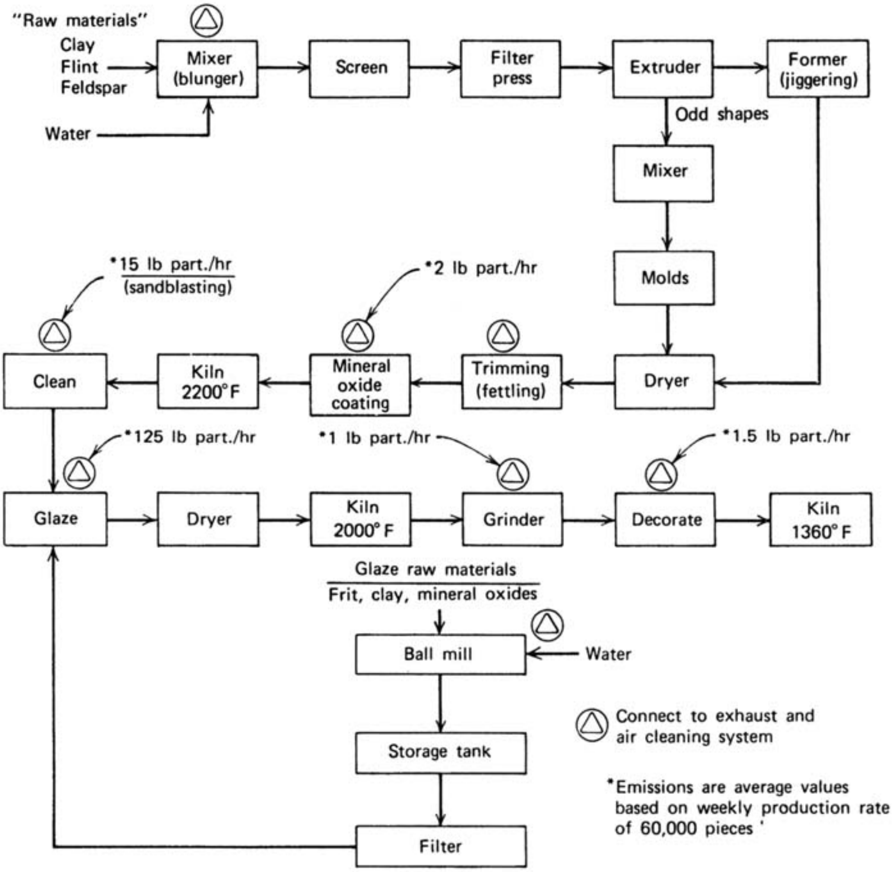

△ Connect to exhaust and air cleaning system

*Emissions are average values based on weekly production rate of 60,000 pieces '

Figure 32.2 Flow diagram for pottery manufacture. Courtesy of ACGIH (1973).

TABLE 32.3 Summary of Main Sources of Silica Dust in the Pottery Industry

Source	Cause	Precautions
Handling powdered raw materials (body preparation, glaze preparation)	Bag slitting Manual dispensing Shoveling Disposal of empty bags Spillages	Change to premixed raw materials Receive in larger containers for handling by fork-lift truck Avoid shoveling dry powder Dispense under LEV, carefully place empty bags into plastic sack Clear spillages quickly by vacuum—**do not dry sweep** Train operators
Clay casting slip	Gross spillages due to pipe/ mold failure Leakages Accumulations of minor spillages	Maintain slip pipes, connections, valves—inspect Ensure good quality mold manufacture to reduce leakages Pipe slip returns back to ark rather than bucket Clear up spillages before they dry out Train operators
Plastic clay	Spillage of clay scraps onto floor—drying out Scrap returns—drying out	Provide sufficient number of scrap bins Do not allow scrap bins to become overfull before emptying Keep floors clean Return scrap to blunger or, if not possible, keep damp Train operators
Floors	Spilled materials being allowed to dry out Poor working practices Poorly constructed floors Inadequate cleaning procedures Immovable plant and equipment	Clear up spillages before they dry out Construct floors with smooth impervious surface Clean by dustless or wet methods sufficiently frequently Store materials off the floor Use castors on tables etc. to move out of way for cleaning Train operators and supervise contractors

Molds	Slip running down sides of molds	Do not stack molds one on top of another when pouring out Do not trail slip from one mold to another when filling Clean off any spillage when damp Use wires rather than elastic band where practicable to hold molds together Train operators
Fettling of finished goods	Dust created by scraping dry ware with knife or abrasive materials	Use damp sponging where practicable **Only** dry fettle in suitable exhausted hood Limit amount of fettling by improving production methods and accuracy of molds Train staff to use hoods properly Routinely check ventilation plant
Biscuit brushing	Dust generated by operation	Use equipment with adequate ventilation Keep area clean
Glaze spraying	Atomization of glaze producing droplets containing respirable free silica	Only carry out work in suitable exhausted spray hood Clean up spillages before they dry

Source: CICA (1992). Crown copyright. Reproduced with permission of the Controller of Her Majesty's Stationary Office.

(crushed glass), clay, and metal compounds is sprayed on the part, and it is again fired in a kiln. The piece is finished by grinding the base and placing on a decorative decal which is fired in place.

The principal hazard in this industry is pneumoconiosis due to the exposure to silica dust. The major exposures to dust occur during the crushing, screening, and preparation of the clay and sand materials, the secondary shaping of the part, and the spraying of the slip and glazes. A major portion of the airborne dust is due to resuspension of dust from equipment, floors, and clothing. The control measures for silica exposure include reducing the percentage of quartz in the raw materials, substituting nonsiliceous material, maintaining all materials in a wet state, providing local exhaust ventilation, good housekeeping, and personal protective clothing (Table 32.3).

The preparation and application of glazes may present a potential hazard due to the use of lead and other heavy metal based glazes. In the United Kingdom, the lead hazard has been reduced by specifying that the glazes may not contain more than 5% soluble lead. This material specification was backed up by an aggressive program of good housekeeping, clothing changes, locker and shower facilities, prohibition of smoking and eating at the workplace, and local exhaust ventilation at the application locations. As mentioned earlier, the availability of well-conceived and validated designs of local exhaust ventilation hoods for this industry has been of great value in the United Kingdom (CICA, 1992).

In an industrial hygiene component of a study to monitor the health of kaolin clay workers in the UK pottery industry and to evaluate the impact of improved dust control in the industry in the 1970s, a large number of respirable dust samples were collected in the period 1984–1986 (Ogle et al., 1989). The average concentration and the number of samples (in parentheses) taken were as follows: dryers, 1.9 mg/m^3 (681); attriter mills, 2.7 mg/m^3 (114); calciners, 2.5 mg/m^3 (63); and slurry plants, 1.1 mg/m^3 (69). The present acceptable occupational exposure limit for respirable kaolin dust is 2.0 mg/m^3. The UK study indicated that because of improvements in dust control, the workers who came into the industry after 1971 would not be expected to develop Category 1 pneumoconiosis in a working lifetime. Of the current jobs, the attriter mills have the greatest effect on the X-ray category.

REFERENCES

ACGIH (1973), *Process Flow Diagram and Air Pollution Emission Estimates*, American Conference of Governmental Industrial Hygienists, Cincinnati, OH.

Buringh, E., van de Belt, R., and van der Wal, J. F., (1990), *Ann. Occup. Hyg.*, **34**, 483–497.

CICA (1992), *Silica and Lead: Control of Exposures in the Pottery Industry*, Health and Safety Commission, Health and Safety Executive, London.

Cooper, T. C., Gressel, M. G., Froelich, P. A., Caplan, P., Mickelsen, R. L., Valiant, D., and Bost, P. (1993), *Am. Ind. Hyg. Assoc. J.*, **54**, 600–606.

EPA (1973), *Compilation of Air Pollution Factors*, 2nd ed., Publication No. AP-42, US Environmental Protection Agency, Research Triangle Park, NC.

Ogle, C. J., Rundle, E. M., and Sugar, E. T. (1989), *Brit. J. Ind. Med.*, **46**, 261–270.

PART NINE

MISCELLANEOUS

CHAPTER 33

Pulp and Paper

33.1 INTRODUCTION

The world production of pulp is more than 120 million tons with the major producing countries United States, Canada, Japan, Sweden, and Finland. Although wood pulp was initially used only for paper, it is now used in a variety of chemical processes. The total United States workforce in pulp, paper, and paperboard products is about 160,000. Pulp production is now dominated by the sulfate (Kraft) process (60%), with sulfite (10%), and the other techniques including groundwood processing contributing the balance. Both pulp and paper production are reviewed in this chapter. Only the chemical pulping processes, sulfate and sulfite, are covered since they represent the major occupational health challenges.

As noted by Robinson et al. (1986), there have been few mortality studies of pulp and paper workers. A retrospective cohort study by the authors observed a statistical nonsignificant excess of death due to lymphosarcoma and reticulosarcoma in sulfate mill workers and stomach cancer in sulfate mill workers.

Respiratory disease in pulp and paper workers in a production facility in New Hampshire has been studied by Henneberger et al. (1989). The mean level of forced expiratory volume in 1 sec (FEV_1) and forced vital capacity (FVC) of subjects who had worked in the pulp mill were lower than unexposed subjects. Each year of employment in the pulp operation was associated with a 5.8-ml decrement in FEV_1. It was interesting to note that 91% of the cohort who had worked in the pulp mill at some time had transferred to another operation. This is evidence of common sense on the part of the workers, based on the author's experience while conducting air sampling in the industry during the 1960s.

In a study of Swedish workers exposed to high concentrations of paper dust (10–30 mg/m^3), Thoren et al. (1989) observed a significant decrement in FEV_1 and FVC among the heavily exposed workers. The authors state that this could indicate either restrictive or obstructive lung disease.

33.2 CHEMICAL PULPING

Although pulp is produced by both mechanical and chemical processes, the chemical methods produce more than 70% of the pulp used today and the exposures these processes present are much more serious than those of mechanical pulping. For this reason, only chemical pulping is discussed. In the Kraft, or sulfate process, described in Table 33.1 and Figure 33.1, chipped wood is digested with steam in tanks using a solution of sodium sulfide and sodium hydroxide (white liquor). Gases are vented periodically from the digester to relieve the pressure buildup. When the digestion is complete, the load is dumped to the blow tank and the gases vent from the pulp and digestion liquid. The spent cooking liquid (black liquor) is drained off, and the pulp is washed, screened, and bleached. The chemicals are recovered from the spent liquor by concentrating it in multiple-effect evaporators. Salt cake is added, and the mixture is sprayed into the recovery furnace; here water is removed, the remaining liquor is burned, and the chemicals are recovered. The chemicals are dissolved in water in the smelt tank, and quicklime is added to convert the sodium carbonate to sodium hydroxide. The calcium carbonate thus formed is converted to calcium oxide in the lime kiln. This product is slaked with water to produce calcium hydroxide for the causticizer. The soda pulp process is similar to the sulfate technique except that sodium carbonate is used for chemical make-up in the furnace. The digestion is carried out with a sodium hydroxide cooking liquor.

In the sulfite process, the digester liquor is an aqueous solution of sulfurous acid mixed with lime or other base to form bisulfites. The sulfur dioxide is obtained either as a compressed gas or from the burning of sulfur or the roasting of pyrite ores. The relief gas in this process contains high concentrations of sulfur dioxide, which must be recovered for economical operation. This is accomplished by separators and coolers.

33.3 PAPER PRODUCTION

The papermaking process, usually carried out in a site adjoining the pulp mill, starts with the bleaching of the pulp. This is usually accomplished with chlorine, followed by extraction with sodium hydroxide, then calcium or sodium hypochlorite,

TABLE 33.1 Kraft (Sulfate) Pulp Process

Process Step	Formula
White liquor	$NaS_2 + NaOH$
Black liquor	$NaS_2 + NaOH$ + dissolved lignin (15% solids) + Na_2SO_4
Products of combustion of recovery furnace	$NaS_2 + NaCO_3$
Green liquor smelt tank	$NaS_2 + NaCO_3$ in H_2O
Causticizer	$NaS_2 + Na_2CO_3 + CA(OH)_2$ (quicklime) $\rightarrow NaS_2 + NaOH + CaCO_3 \downarrow$
Lime kiln	$CaCO_3 \xrightarrow{\Delta} CaO + CO_2$
Slaked	$CaO + H_2O \rightarrow Ca(OH)_2$ (for causticizer)

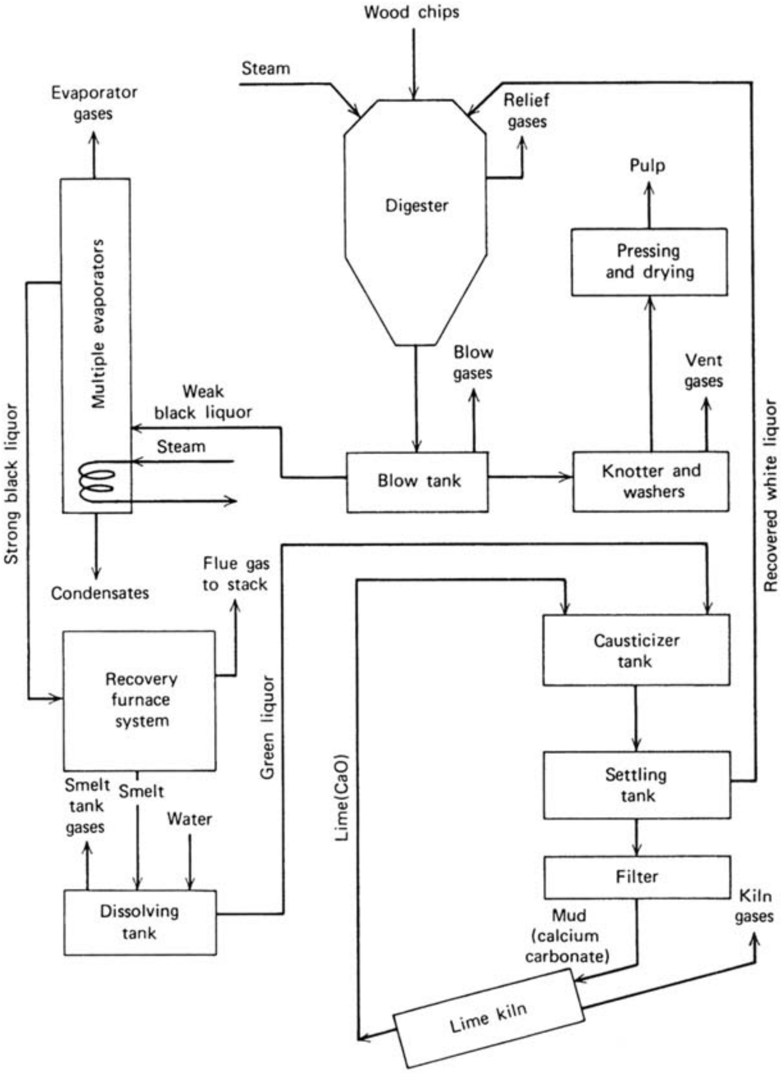

Figure 33.1 Flow diagram of a pulp plant. Source: PHS (1963).

and finally a chlorine dioxide treatment. Chloride hydrate may form when gaseous chlorine enters the vat and is carried to the surface, where it releases chlorine into the atmosphere. As a rule, however, the exposure to chlorine is not difficult to control by local exhaust ventilation. After a series of beating and refining steps, additives are blended with the pulp depending on the paper end use; the additives commonly encountered in paper mills are shown in Table 33.2.

The consistency of the pulp is adjusted by adding water and the slurry is pumped to a moving wire sieve where some water is removed. It then progresses to a press to increase the solids content and finally to a heated cylinder where the water con-

TABLE 33.2 Common Additives for Paper

- Filler pigments
  - Kaolin (aluminum silicate)
  - Titanium dioxide (anastase and rutile)
  - Calcium carbonate
  - Zinc sulphide
  - Lithopone (barium-zinc sulphide-sulphate)
- Lubricants, plasticizers, and flow modifiers
  - Soaps
  - Sulphated oils
  - Wax emulsions
  - Amine products
  - Esters
- Humectants and viscosity modifiers
  - Urea
  - Dicyanodiamide
  - Urea-formaldehyde and melamine-formaldehyde resins
  - Glyoxal
  - Zinc and aluminum salts
- Barrier coating
  - Paraffin wax
  - Polyethylene
  - Ethylene-vinyl acetate copolymer
  - Cellulose derivatives
  - Rubber derivatives
  - Butadiene–styrene copolymers
  - Polyvinylidene chloride
  - Polyamides
  - Polyesters
  - Alkyds
- Coating pigments
  - Kaolin (aluminum silicate)
  - Muscovite mica
  - Attapulgite (an aluminum silicate derivative)
  - Talc (magnesium silicate hydrate)
  - Titanium dioxide
  - Calcium carbonate
  - Aluminum oxide hydrate
  - Satin White (calcium sulphoaluminate)
  - Barium sulphate
  - Calcium sulphate
  - Zinc oxide
- Sizes
  - Casein
  - Soya bean protein
  - Starch
  - Polymer emulsions
- Foam control
  - Pine oil
  - Capryl and tridecyl alcohol
  - Fuel oil
  - Tributyl citrate and phosphate
  - Silicones

Source: Adapted from IARC (1981).

tent is reduced to 5–8%. Glazed paper is produced by a multiroll calendering operation. The paper may be coated with clay, mica, talc, casein, soda ash, dyes, plastics, gums, varnishes, linseed oil, organic solvents, and plastics. The principal exposures arising from these operations involve acrolein and other aldehydes resulting from the atmospheric oxidation of linseed oil and solvent vapors from the coating and subsequent drying of the paper. When the coating and drying are done in air-conditioned rooms, the environmental control problems become difficult.

33.4 EXPOSURE PROFILE

The principal exposure to operators in Kraft pulping occurs when the bottom of the digester is opened and the contents are dumped. The released gases include hydrogen sulfide, methyl mercaptan, dimethyl sulfide, dimethyl disulfide, and sulfur dioxide. The effluent from the recovery furnaces includes organic mercaptans and sulfides, hydrogen sulfide, and sulfur dioxide.

A comprehensive three-year study of a pulp and paper plant in New Hampshire indicated sulfur dioxide concentration from a fraction of a part per million to 33 ppm (Ferris et al., 1967). A study in Finnish pulp mills in that same time period indicated concentrations ranging from 0.05 to 25 ppm (Skytta, 1978). Ferris et al. (1967) measured concentrations of hydrogen sulfide as high as 8 ppm while Skytta (1978) noted concentrations of 0.1–8 ppm.

During bleaching operations in the paper plant, Ferris et al. (1967) noted concentrations of 0–64 ppm of chlorine and 0–2.0 ppm of chlorine dioxide. The similar Finnish study, mentioned above, ranged from 0.001 to 0.5 ppm.

A comprehensive study of an Indian pulp and paper plant by Gautam et al. (1979) showed hydrogen sulfide and mercaptan concentrations at the digester opening of 0.45 and 16.2 ppm, respectively; during blowing of digesters concentrations were 0.4 and 23.7 ppm, and after blowing the digesters the concentrations were 0.23 and 21.8 ppm. In the bleaching plant the concentrations of chlorine were: chlorine tower, 16.7 ppm; alkali tower, 8.5 ppm; hypochorite tower, 4.7 ppm; chlorine washer, 0.42 ppm; alkali washer, 0.29 ppm; and hypochlorite washer, 0.72 ppm.

The exposures noted by bag sampling at various locations in a Kraft mill and sulfite mill by Kangas et al. (1984) at digesters, washing, and evaporation varied from 0 to 20 ppm for hydrogen sulfide and from 0 to 25 ppm for methyl mercaptan. Batch operations in both processes resulted in higher exposures than continuous operations.

A helpful review of the major pulp and paper mill exposures was prepared by Robinson et al. (1986) and is shown in Table 33.3.

33.5 CONTROLS

Lime exposure may be excessive in both the sulfate and soda processes during handling of the lime. The digestion pit and the first washing cycle should be exhausted to eliminate sulfur dioxide, hydrogen sulfide, and mercaptans. A serious sulfur

TABLE 33.3 Pulp and Paper Mill Exposures

Production Area or Job	Potential Exposures During Study Period
Raw wood preparation, (i.e., debarking and chipping	Wood volatiles, wood dust, (Douglas fir, hemlock), spores and fungi
Production of cooking liquor	Sulfate: ammonia, hydrogen sulfide, sulfur dioxide, mercaptans, chromates (as contaminants)
	Sulfite: sulfur, sulfur dioxide, calcium carbonate, zinc, sulfuric acid, lead fumes, asbestos, sulfurous acid
Pulp production, cooking	Sulfate: lime, magnesium, wood volatiles
	Sulfite: pigments, dyes, wood volatiles
	Groundwood: wood volatiles
Pulp bleaching and bleach plant	Chlorine compounds, boron compounds, caustic neoabietic acids
Wet pulp paper additives	Talc, clays, titanium dioxide, urea and melamine formaldehyde, pigments and dyes
Bleaching and additives	Same as for pulp bleaching, bleach plant and wet pulp paper additives
Paper rolling, sizing, dying, drying, glazing, coating	Urea and melamine formaldehyde, paper dust, coating and pigment dusts (aniline dye in the groundwood process plant)
Maintenance	General plant exposures

Source: Adapted from Robinson et al. (1986).

dioxide exposure may occur throughout the entire sulfate process. This gas can be controlled by ventilation at the sulfur burners (thereby achieving negative pressure on the acid towers), ventilation on the digesters, and remote operation of blowdown valves.

The most significant effort at air pollution control has been the oxidation of the black liquor before the multiple-effect evaporation. In this process, the sulfur compounds are oxidized to produce less volatile materials. Incineration of sulfur off-gases has also been attempted by collecting the gases in a gas holder and burning them in the furnace. Other air pollution control techniques are in use which also reduce exposure of workers.

REFERENCES

Ferris, B. G., Burgess, W. A., and Worcester, J. (1967), *Brit. J. Ind. Med.*, **24**, 26–37.

Gautam, S. S., Venkatanarayanan, A. V., and Parthasarathy, B. (1979), *Ann. Occup. Hyg.*, **22**, 371.

Henneberger, P. K., Eisen, E. A., and Ferris, B. G. (1989), *Brit. J. Ind. Med.*, **46**, 765–772.

IARC (1981), *Monograph on the Evaluation of Carcinogenic Risks To Humans—Pulp and Paper*, Vol. 25, International Agency for Research on Cancer, Lyon, France.

Kangas, J., Jappinen, P., and Savolainen, S. (1984), *Am. Ind. Hyg. Assoc. J.*, **45**, 787–790.

PHS (1963), *Air Pollution and the Kraft Pulping Industry, An Annotated Bibliography*, Public Health Service Publication No. 999-AP-4, US Department of Health Education and Welfare, Cincinnati, OH.

Robinson, C. F., Waxweiler, R. J., and Fowler, D. P. (1986), *Scand. J. Environ. Health*, **12**, 552–560.

Skytta, E. (1978), Statistics from Industrial Hygiene Measurements in 1971–1976, Katsauksia 17, Helsinki.

Thoren, K., Jarvholm, B., and Morgan, U. (1989), *Brit. J. Ind. Med.*, **46**, 192–195.

CHAPTER 34

Textile Fibers—Cotton and Rayon

34.1 INTRODUCTION

A large number of natural and artificial fibers are available for the manufacture of textiles. This chapter discusses only one natural fiber, cotton, and one artificial fiber, rayon. These materials were chosen since they display both a range of manufacturing processes and significant health hazards in their manufacture.

34.2 COTTON

Byssinosis is a disease characterized by shortness of breath, coughing, and a tight chest; this disease occurs in work populations handling certain organic fibers such as cotton, soft hemp, and flax. The symptoms occur on return to the workplace on Monday and gradually subside during the week. The disease is prevalent in the cotton industry and has resulted in an OSHA standard for cotton dust. Extracts of cotton dust and specific cotton components will cause bronchoconstriction. Cotton is also contaminated with gram-negative bacterial endotoxin (see Chapter 31) that causes acute respiratory symptoms and pulmonary function decrement. Recent studies indicate endotoxin may be the principal offending agent in the onset of byssinosis.

The processing of cotton into textiles involves a large number of specific operations common to many textile plants. An introduction to the textile industry, including the purpose of the principal operations and the manner in which textile machines operate, is necessary if one is to adequately evaluate exposures and implement appropriate control technology. The processes are described in detail in an industry source volume (Hamby, 1949) and in brief form in a NIOSH criteria document (NIOSH, 1975).

The cotton boll, or fruit of the cotton plant, is now picked almost entirely by machine in the United States. This seed cotton is processed at a local cotton gin to separate the seed from the cotton lint or fiber and remove any trash. After ginning, the lint is cleaned and baled. At this point, the biologically active material is included in the cotton, which will be processed in the textile plant. The quality of the cotton is graded by fiber length and foreign material present, as shown in Table 34.1 (NIOSH, 1974).

The yarn manufacturing process carried out in most cotton textile plants is described later in this section. Major attention should be given to the carding operation, since it is generally acknowledged to be the major source of dust in the plant. In most factories, the dust-producing machines are provided with complete enclosures with local exhaust ventilation, air cleaning, and recirculation of the air to the workplace. Since the operations must be conducted at high humidity, it is necessary to add water vapor to the air.

34.2.1 Opening

In this process the baled cotton is opened, the compressed fibers are loosened, and the heavy and bulky impurities are removed to provide material suitable for processing. The dust-producing machinery includes bale breakers, automatic feeders, separators and openers, and mechanical conveyors. Pneumatic conveying minimizes the dust release.

34.2.2 Picking

A picker includes a feed hopper, beaters, screen sections, and a calender roll section. This equipment opens and cleans the cotton and forms a continuous web or lap for the card. It is a significant source of dust, and should be provided with an exhausted enclosure.

TABLE 34.1 Cotton Grades

Cotton Grades	Picker and Card Waste (%)	Shirley Analyzer Nonlint Control (%)
Good middling	6.3	1.5
Strict middling	6.4	1.6
Middling	7.1	2.2
Strict low middling	8.2	3.1
Low middling	9.7	4.5
Strict good ordinary	11.2	5.8
Good ordinary	15.0	7.8

Source: NIOSH, 1974.

34.2.3 Carding

As indicated previously, the cards are a major source of dust. The lap formed by the picker is a loosely bound layer of cotton that consists of unopened tufts and tangled fibers. At this point, there is still a large quantity of trash or nonlint material present. The impact of the quality of the cotton on the dust level is shown in Table 34.2.

The construction of the card is shown in Figure 34.1. The purpose of the card is to remove the trash and short fibers and form a thin, lacy mat with parallel fibers that is then converted to a continuous filament. The lap or mat is positioned on a feed roll and fed between the lickerin, a small cylinder covered with wire teeth, and the feed roll. The rotating lickerin "fingers" the lap, opening the tufts of cotton. Opening the tufts releases the trash, which falls out of the lap. The continu-

TABLE 34.2 Dust Levels in Experimental Card Room Produced by Two Cotton Grades

	Strict Middling Spotted Cotton		Low Middling Spotted Cotton	
Sampling Position	Personal Sampler (mg/m^3)	Vertical Elutriator Sampler (mg/m^3)	Personal Sampler (mg/m^3)	Vertical Elutriator Sampler (mg/m^3)
1	1.41	—	4.39	—
2	—	1.20	—	4.12
3	1.57	—	5.39	—
4	1.37	—	4.99	—
5	—	—	—	—
6	—	1.36	—	4.69
7	1.24	—	5.16	—
8	—	1.03	—	4.16
9	1.32	—	4.40	—
10	—	1.25	—	3.87
Sampler average	1.38	1.21	4.87	4.26

Room conditions
  11.5 room air changes per hour
  75ºF temperature
  55% relative humidity
  Card production rate—20 lb/hr
For strict middling spotted cotton
  No significant differences (p <0.05) among dust levels at different positions or between samplers
For low middling spotted cotton
  Differences are significant (p <0.05) between extreme sampling position means for both personal and vertical elutriator samplers
Difference is significant (p <0.05) between dust levels for personal and vertical elutriator samplers

Source: Cooke et al. (1975).

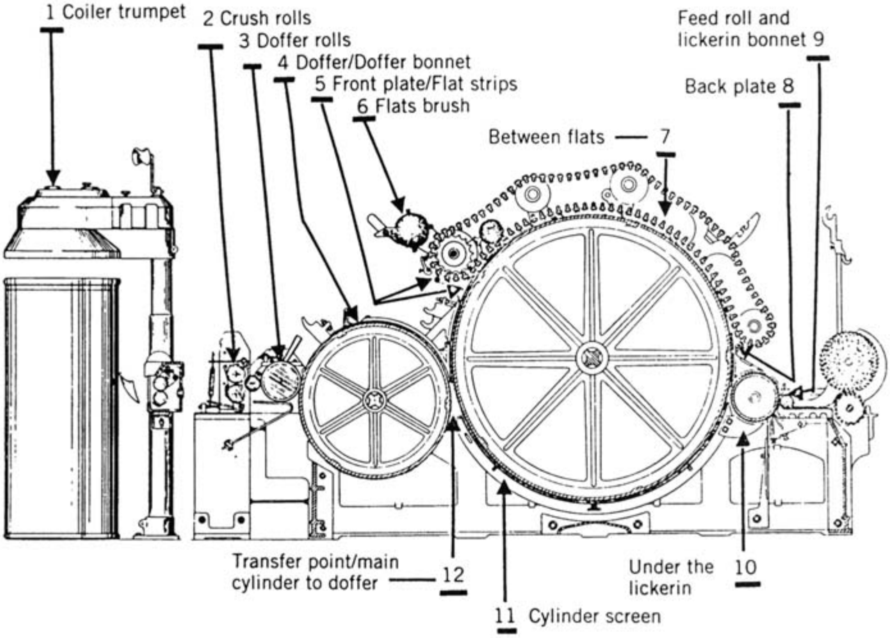

Figure 34.1 Major points of dust generation on card. Source: NIOSH, 1974.

ous mat is then removed by the rapidly rotating card cylinder, which is also covered with wire teeth. Slow-moving flats covered with wire cloth pass over the rotary cylinder in a counterdirection, opening and straightening the cotton passing through the interface. Dust and debris are also released at this point.

The fibrous bed is removed from the card cylinder by the doffer, a small cylinder with needle surfaces. The web is compressed by rolls and fed through a round opening to transform the 100-cm (39 in.) wide web to a round filament or sliver 2.5 cm (1 in.) in diameter, which is coiled in cans. The major sources of particulate emissions are shown in Figure 34.1. The carding machines are routinely provided with enclosures and suitable exhaust.

34.2.4 Drawing and Roving

The drawing process involves feeding several round slivers into a drawing frame where they are compressed into one dense sliver that is coiled again for the next operation. This process pulls the fibers together, arranges them in a parallel orientation, and improves uniformity of the sliver. Although usually enclosed and exhausted, this operation is not a major source of dust. Roving is a process that again combines many slivers from drawing into one sliver, thus providing more uniformity to the product. The continuous roving is given a twist in the process that improves its strength. It is then wound on a bobbin for spinning. Again, this is not a dusty operation.

34.2.5 Spinning and Winding

Spinning reduces the large diameter roving to a small-diameter twisted yarn. Since this operation is conducted at high speed, any residual trash in the cotton will be removed and, for this reason, it warrants evaluation. To provide long yarn lengths for continuous weaving operations, yarn is transferred from small bobbins to cones or tubes. This operation is also conducted at high speed and may present a dusty environment. By the time the material is presented for weaving, little trash dust is present and the hazard is minimal.

34.2.6 Control

The NIOSH criteria document (NIOSH, 1975) identifies the control approaches as: (a) treat the raw cotton to remove or attenuate the offending agent; (b) change the process that is the source of dust; or (c) remove the dust from the air in the workplace. The latter approach continues to be the principal control philosophy, although studies continue on the first two alternatives.

The control of dust in the manufacture of yarn cotton has been the subject of a NIOSH-sponsored study (NIOSH, 1974). The result of this project was the development of design criteria for local exhaust ventilation for processing machinery adequate to maintain airborne concentrations below 0.5 mg/m^3. A variety of exhausted enclosures and air-cleaning techniques were proposed in this report. The investigators determined the average air concentrations at the various operations with and without controls, as shown in Table 34.3.

A study of airborne cotton dust in a large textile plant revealed that present ventilation practice results in the return of most of the respirable dust (Hammad and Corn, 1971). Recirculation must be curtailed, or improved air cleaning is necessary to control this problem. In addition to local exhaust ventilation, a series of sensible work practices and good housekeeping rules must be followed. The application of single-use respirators for protection against cotton dust was studied by Revoir, and protection factors were determined during work in cotton mills (Revoir, 1974).

A major source of dust in cotton mills is due to blowdown by airlines or blowers. Industry spokesmen feel that deposited lint and dust on machinery and work surfaces represent a major fire hazard and must be removed. In their opinion, vacuuming is inadequate and they recommend judicious use of blowdown with respiratory protection.

34.3 RAYON

In the rayon-making process, pads or sheets of cellulose prepared from wood pulp are steeped in sodium hydroxide to form a "soda" cellulose. The sheet material is shredded, aged, and mixed with carbon disulfide in an xanthating churn. The cellulose xanthate, in solution in alkali, is a brown syrupy liquid known as viscose. After filtration, aging, and deaeration, the viscose is forced through small holes in a nozzle or "spinerette" submerged in a sulfuric acid bath. The stream of viscose

TABLE 34.3 Range of Typical Lint and Dust Concentrations

Operation	Total Dust (mg/m^3)	Dust Excluding Lint (mg/m^3)
Picking, no control	—	0.6–1.6
control	0.4–0.7	0.3–0.4
Opening and picking,		
no control	1.5–9.1	0.2–1.9
control	—	0.3–0.5
Carding, no control	5.2–21.2	0.3–5.4
control	0.5–8.4	0.1–4.2

Source: NIOSH (1974).

emitted from this spinning operation contacts the bath, and the cellulose is regenerated to form a continuous fiber. Tension on the fiber is established using two rollers called "godets," which operate at slightly different speeds. This process orients the yarn fibers in a position parallel to the yarn axis. The yarn may be chopped into short elements at this point for additional processing.

The exposure to carbon disulfide in this industry is widespread and of high level owing to the nature of the operations and the high vapor pressure of the solvent. This is unfortunate since carbon disulfide has toxic effects that are both wide ranging and serious. Overexposure risks to the nervous system include a Parkinsonism-like syndrome, psychosis, and suicide. Repeated exposure has been associated with an excess of coronary heart disease. There is inconsistent epidemiologic evidence of reproductive toxicity. To match these impressive toxic effects, this solvent has a wide explosive range and an autoignition temperature of 120°C (250°F), the surface temperature of a light bulb.

The potential vapor exposure points in the process are the xanthation, spinning, "godet," and cutter house operations (NIOSH, 1977). The xanthation process usually can be controlled, since it is an enclosed operation. The open spinning baths release carbon disulfide and hydrogen sulfide, and operations should be monitored and ventilation control applied. The stretching and processing of the fiber at the "godets" is a principal exposure point because carbon disulfide is released from the fiber. Moreover, if the continuous fiber breaks, the fiber or "tow" must be pulled manually, resulting in a serious carbon disulfide exposure. This operation must be controlled by local exhaust ventilation utilizing an enclosing hood with a face velocity of 1.0 m/sec (200 fpm).

Extensive air sampling data are available on the concentration of carbon disulfide and hydrogen sulfide in viscose rayon plants. In a Finnish plant, the concentrations of carbon disulfide were approximately 10 times those of hydrogen sulfide. The combined concentrations, which were greater than 40 ppm before 1950, had dropped to below 5 ppm by the late 1960s (Hernberg et al., 1970). A NIOSH Health Hazard Evaluation demonstrated that concentrations of carbon disulfide routinely exceeded 20 ppm as an 8-hr TWA concentration in a rayon fiber plant (NIOSH, 1973). In another survey at viscose rayon plants in the United States, carbon disulfide concentrations in the churn and spinning rooms were 10–15 ppm (SRI, 1977).

The complete range of conventional controls must be employed in the rayon industry to minimize exposure to carbon disulfide. Work practices must be carefully defined; housekeeping and handling procedures must be encouraged to reduce the deposits of waste viscose, bath solution, and tow on the floor; it must be recognized that effective ventilation controls on spinning and cutter house operations are essential. Medical control by periodic examination of workers and biological monitoring is necessary. If work practices and engineering and administrative controls are not adequate, a comprehensive respirator program must be implemented.

REFERENCES

Cooke, J. B., Hatcher, J. D., and Smith, D. L. (1975), *Am. Tex. Rep. Bull.*, May.

Hamby, D. S., Ed. (1949), *The American Cotton Handbook*, 3rd ed., Interscience, New York.

Hammad, Y. Y. and Corn, M. (1971), *Am. Ind. Hyg. Assoc. J.*, **32**, 662–667.

Hernberg, S., Partanen, T., Nordman, C. H., and Sumari, P. (1970), *Br. J. Ind. Med.*, **27**, 313–.

NIOSH (1973), Health Hazard Evaluation Report No. 72-21-91, National Institute for Occupational Safety and Health, Cincinnati, OH.

NIOSH (1974), *Cotton Dust Controls in Yarn Manufacturing*, NIOSH Publ. No. (NIOSH) 74-114, National Institute for Occupational Safety and Health, Cincinnati, OH.

NIOSH (1975), *Criteria for a Recommended Standard—Occupational Exposure to Cotton Dust*, NIOSH Publ. No. (NIOSH) 75-108, National Institute for Occupational Safety and Health, Cincinnati, OH.

NIOSH (1977), *Criteria for a Recommended Standard—Occupational Exposure to Carbon Disulfide*, NIOSH Publ. No. (NIOSH) 77-156, National Institute for Occupational Safety and Health, Cincinnati, OH.

Revoir, W. (1974), *Am. Ind. Hyg. Assoc. J.*, **35**, 503–510.

SRI (1977), *Plant Observation Reports and Evaluations for Carbon Disulfide*, NIOSH Contract No. CDC 99-74-31, Stanford Research Institute, Palo Alto, CA.

APPENDIX A

Composition of Metal Alloys

Several organizations have devised identification systems for metals that are useful to occupational health specialists. The most frequently used systems are those proposed by the American Iron and Steel Institute (AISI); however, other systems are published by the American Society for Metals (ASM), Society of Automotive Engineers (SAE), American Society for Testing and Materials (ASTM), and the Steel Founders Society of America (SFSA). Examples of the composition of alloy steels, stainless steels, nickel alloys, casting alloys, and tool steels are shown in Tables A.1–A.5.

TABLE A.1 AISI Designation System for Alloy Steels

Alloy Series	Approximate Alloy Steels Content(%)
13XX	Mn 1.60–1.90
40XX	Mo 0.15–0.30
41XX	Cr 0.40–1.10; Mo 0.08–0.35
43XX	Ni 1.65–2.00; Cr 0.40–0.90; Mo 0.20–0.30
44XX	Mo 0.45–0.60
46XX	Ni 0.70–2.00; Mo 0.15–0.30
47XX	Ni 0.90–1.20; Cr 0.35–0.55; Mo 0.15–0.40
48XX	Ni 3.25–3.75; Mo 0.20–0.30
50XX	Cr 0.30–0.50
51XX	Cr 0.70–1.15
E51100	C 1.00; Cr 0.90–1.15
E52100	C 1.00; Cr 0.90–1.15
61XX	Cr 0.50–1.10; V 0.10–0.15
86XX	Ni 0.40–0.70; Cr 0.40–0.60; Mo 0.15–0.25
87XX	Ni 0.40–0.70; Cr 0.40–0.60; Mo 0.20–0.30
88XX	Ni 0.40–0.70; Cr 0.40–0.60; Mo 0.30–0.40
92XX	Si 1.80–2.20

Source: From *Machine Design, 1971 Reference Issue,* Copyright 1971, Used with permission of Machine Design.

TABLE A.2 AISI Stainless Steel Classification System

	Chemical Analyses of Stainless Steels (%)					
AISI No.	Carbon	Manganese	Silicon	Chromium	Nickel	Other Elements
	Chromium-Nickel-Magnesium-Austenitic-Nonhardenable					
201	0.15 Max.	5.5/7.5	1.0	16.0/18.0	3.5/5.5	N_2 0.25 Max.
202	0.15 Max.	7.5/10.	1.0	17.0/19.0	4.0/6.0	N_2 0.25 Max.
	Chromium-Nickel-Austenitic-Nonhardenable					
301	0.15 Max.	2.0	1.0	16.0/18.0	6.0/8.0	—
308	0.08 Max	2.0	1.0	19.0/21.0	10.0/12.0	—
309	0.20 Max.	2.0	1.0	22.0/24.0	12.0/15.0	—
	Chromium-Martensitic-Hardenable					
403	0.15 Max.	1.0	0.5	11.5/13.0	—	—
410	0.15 Max.	1.0	1.0	11.5/13.5	—	—
	Chromium-Ferritic-Nonhardenable					
405	0.08 Max.	1.0	1.0	11.5/14.5	—	Al 1.1/0.3
430	0.12 Max.	1.0	1.0	14.0/18.0	—	—
430F	0.12 Max.	1.25	1.0	14.0/18.0	—	S 0.15 Min.
430FSe	0.12 Max.	1.25	1.0	14.0/18.0	—	Se 0.15 Min.

TABLE A.3 Composition of Nickel and Nickel Alloys

Alloy Designation	Nominal Chemical Composition (%)										
	Ni	C	Mn	Fe	S	Si	Cu	Cr	Al	Ti	Cb
Nickel 200	99.5	0.08	0.16	0.2	0.005	0.18	0.13	—	—	—	—
Nickel 201	99.5	0.01	0.18	0.2	0.005	0.18	0.13	—	—	—	—
Monel alloy 400	66.5	0.15	1.0	1.25	0.012	0.25	31.5	—	—	—	—
Monel alloy 401	42.5	0.05	1.6	0.38	0.008	0.13	Bal.	—	—	—	—
Inconel alloy 600	76.0	0.08	0.5	8.0	0.008	0.25	0.25	15.5	—	—	—
Inconel alloy 601	60.5	0.05	0.5	14.1	0.007	0.25	0.50	23.0	1.35	—	—
Incoloy alloy 800	32.5	0.05	0.75	46.0	0.008	0.50	0.38	21.0	0.38	0.38	—
Incoloy alloy 801	32.0	0.05	0.75	44.5	0.008	0.50	0.25	20.5	—	1.13	—

TABLE A.4 Chemical Compositions of Tool Steels

		Distinguishing Alloying Elements[a]								
	AISI Designation	C (%)	Mn	Si	Ni	Cr	Mo	W	V	Co
Water-hardening	W	0.60–1.40				X			X	
Shock-resisting	S	0.50–0.55	X	X		X	X	X		
Oil-hardening	O	0.90–1.45	X	X		X	X	X		
Air-hardening	A	0.50–2.25	X	X	X	O	O	X	X	
Cold-work	D	1.50–2.35				O	O		X	X
Hot-work (chromium)	H	0.35–0.40				O	X	X	X	X
Hot-work (tungsten)	H	0.25–0.50				O		O	X	
Hot-work (molybdenum)	H	0.55–0.65				O	O	X	O	
High-speed (tungsten)	T	0.75–1.50				O		O	O	X
High-speed (molybdenum)	M	0.80–1.30				O	O	O	O	X
Low-alloy	L	0.50–1.10			X	O			X	
Carbon-tungsten	F	1.00–1.25						O		
Mold and die	P	0.07–0.35			X	X	X			

Source: From *Machine Design, 1971 Reference Issue*, Copyright 1971. Used with permission of Machine Design.

[a] O = most tool steels of this type contain significant amounts of this element. X = several—but not all—tool steels of this type contain this element.

TABLE A.5 Composition of Selected Casting Alloys

Alloy		
Name	ASTM No.	Typical Composition (wt. %)
Ferrous		
Cast steel	60-30	≤0.25C
	175-145	
Gray iron	20	3.5C, 2.4Si, 0.4P, 0.1S
	60	2.7C, 2.0Si, 0.1P, 0.1S, 0.8Mn
Malleable iron	A47	2.5C, 1.4Si, 0.1P, 0.1S, 0.4Mn
Nodular iron	60-40-15	3.5C, 2.4Si, 0.1P, 0.03S, 0.8Mn
Stainless steel	CF8	0.08C, 19Cr, 9Ni
Cu-base		
Leaded red brass	4A	5Sn, 5Pb, 5Zn
High-lead tin brass	3A	10Sn, 10Pb
Leaded yellow brass	6C	1Sn, 1Pb, 37Zn
Al-base		
	108	4Cu, 3Si
	D132	3.5Cu, 9Si, 0.8Mg, 0.8Ni
	380	3.5Cu, 8Si
Mg-base		
	AZ91	9A1, 0.7Zn, 0.2Mn
	EZ33A	2.7Zn, 0.5Zr, 3 rare earths
Zn-base		
	AG40A	4A1, 0.04 Mg
Pb-base		
Type metal		3Sn, 11Sb
Sn-base		
Babbitt	Alloy 1	4.5Sb, 4.5Cu

Source: From *Introduction To Manufacturing Processes*. Copyright 1977. Used with permission of McGraw-Hill Book Co.

APPENDIX B

Sources of Information

B.1 NATIONAL ORGANIZATIONS

Air and Waste Management Association. Three Gateway Center, Four West, Pittsburgh, PA 15222.

American Academy of Industrial Hygiene. 2700 Prosperity Ave., Suite 250, Fairfax, VA 22031.

The American Academy of Occupational Medicine. 150 North Wacker Drive, Chicago, IL 60606.

American Association of Occupational Health Nurses, Inc. (AAOHN). 79 Madison Avenue, New York, NY 10016.

American Board for Occupational Health Nurses, Inc. (ABOHN). 521 W. Westfield Avenue, Roselle Park, NJ 07204.

American Chemical Society. 1155 Sixteenth Street, N.W., Washington, D.C. 20036.

American Conference of Governmental Industrial Hygienists, Inc. Kemper Woods Center, 1330 Kemper Woods Meadow Dr., Cincinnati, OH 45240

American Industrial Hygiene Association. 2700 Prosperity Ave., Suite 250, Fairfax, VA 22031.

American Medical Association. 535 North Dearborn Street, Chicago, IL 60610.

American National Standards Institute. 1430 Broadway, New York, NY 10018.

American Occupational Medical Association. 150 North Wacker Drive, Chicago, IL 60606.

American Public Health Association. 1015 Eighteenth Street, N.W., Washington, D.C. 20036.

American Society of Heating, Refrigeration and Air-Conditioning Engineers, Inc. 1791 Tullie Circle, NE, Atlanta, GA 30329.

American Society for Testing and Materials. 1916 Race Street, Philadelphia, PA 19103.

British Occupational Hygiene Society. Suite 2, Georgian House, Great Northern Road, Derby, DE1 1LT, UK.

Chemical Industry Institute of Toxicology. Research Triangle Park, NC 27709.

Health and Safety Executive. Information Centre, Broad Lane, Sheffield, S3 7HQ, UK.

Industrial Health Foundation, Inc. 5231 Centre Avenue, Pittsburgh, PA 15232.

International Society for Respiratory Protection. c/o B. S. Squibb, P. O. Box 158, Jonesborough, TN 37564.
National Fire Protection Association. 1 Batterymarch Park, P. O. Box 9101, Quincy, MA 02269.
National Safety Council. 425 N. Michigan Avenue, Chicago, IL 60611.
Society of Toxicology. 475 Wolf Ledges Parkway, Akron, OH 44311.

B.2 INDUSTRIAL AND TRADE ASSOCIATIONS

The Aluminum Association. 818 Connecticut Avenue, N.W., Washington, D.C. 20006.
American Foundrymen's Society. 505 State St., Des Plaines, IL 60016.
American Iron and Steel Institute. 1101 17th Street, N.W., Washington, D.C. 20006
American Petroleum Institute. 1220 L Street, N.W., Washington, D.C. 20005.
American Society for Metals. Materials Park, OH 44073.
American Welding Society. 2501 Northwest Seventh Street, Miami, FL 33125.
Chemical Manufacturers'Association. 2501 M St., N.W., Washington, D.C. 20037.
Compressed Gas Association, Inc. 500 Fifth Avenue, New York, NY 10036.
The Fertilizer Institute. 1015 18th Street, N.W., Washington, D.C. 20036.
Forging Industry Association. 1121 Illuminating Building, Cleveland, OH 44113.
Investment Casting Institute. 8521 Clover Meadow, Dallas, TX 75243.
Metal Finishers Supplies Association. 1025 E. Menle Road, Birmingham, MI 48011.
Metal Powder Industries Federation. P. O. Box 2054, Princeton, NJ 08540.
Metal Treating Institute. 1300 Executive Center, Suite 115, Tallahassee, FL 32301.
National Association of Metal Finishers. 111 E. Wacker Drive, Chicago, IL 60601.
Society of Manufacturing Engineers. One SME Drive, Dearborn, MI 48128.
The Society of the Plastics Industry. 1275 K Street, NW, Suite 400, Washington, DC 20005.

B.3 FEDERAL AGENCIES

Department of Commerce
  National Bureau of Standards. Washington, D.C. 20234.
  National Technical Information Services (NTIS). 5285 Port Royal Road, Springfield, VA 22151
Department of Health and Human Services
  Public Health Service
  Center for Disease Control. Atlanta, GA 30333.
  National Institute for Occupational Safety and Health (NIOSH). Publications Disseminations, DSDTT, 4676 Columbus Parkway, Cincinnati, OH 45226.

Bureau of Radiological Health. 12720 Twinbrook Parkway, Rockville, MD 20852.

National Clearinghouse for Poison Control Centers. 5401 Westbard Avenue, Bethesda, MD 20016.

National Institutes of Health

National Cancer Institute. Bethesda, MD 20014.

National Heart and Lung Institute. Bethesda, MD 20014.

National Institute of Environmental Health Sciences (NIEHS). P. O. Box 12233, Research Triangle Park, NC 27709.

National Library of Medicine. 8600 Rockville Pike, Bethesda, MD 20014.

Department of the Interior

Mine Safety and Health Administration. C Street between Eighteenth and Nineteenth Streets, Washington, D.C. 20240.

Department of Labor

Bureau of Labor Statistics. 200 Constitution Avenue, N.W., Washington, D.C. 20240.

Occupational Safety and Health Administration, 2000 Constitution Avenue, Washington, D.C. 20210.

Environmental Protection Agency

Air and Water Programs Office. 401 M Street, S.W., Washington, D.C. 20460.

Pesticides Programs Office. 401 M Street, S.W., Washington, D.C. 20460.

Radiation Programs Office. Rockville, MD 20852

Water Program Operations Office. 401 M Street, S.W., Washington, D.C. 20460.

Air Pollution Technical Information Center (APTIC), Office of Technical Information and Publications (OTIP), Air Pollution Control Office (APCO). P. O. Box 12055, Research Triangle Park, NC 27709.

National Environmental Research Center. Research Triangle Park, NC 27711 (also located in Cincinnati, OH 45268; Corvallis, OR 97330; and Las Vegas, NV 89114).

Western Environmental Research Laboratory. P. O. Box 15027, Las Vegas, NV 89114.

National Council for Radiation Protection and Measurements (NCRP). 7610 Woodmont Avenue, S.E., 1016, Washington, D.C. 20014.

Nuclear Regulatory Commission. 1717 H Street, N.W., Washington, D.C. 20555.
U.S. Government Printing Office. Washington, D.C. 20402.

B.4 UNIONS

AFL-CIO Dept. of Health and Safety
AFL-CIO Building, 815 16th St., N.W.
Room 507
Washington, D.C. 20006

Amalgamated Clothing & Textile Workers Union
770 Broadway
New York, NewYork 10003

Boilermakers, International Brotherhood of—
Local 802
P.O. Box 618
Chester, Pennsylvania 19016

Chemical Workers Union, International
1655 W. Market Street
Akron, Ohio 44313

IUE—Local 201
Health and Safety Committee
100 Bennett Street
Lynn, Massachusetts 01905

Molders and Allied Workers Union
1216 E. McMillan Street
Suite 302
Cincinnati, Ohio 45206

Oil, Chemical and Atomic Workers
1636 Champa
P.O. Box 2812
Denver, Colorado 80201

Rubber, Cork, Linoleum and Plastic Workers
of America, United
URWA Building
87 S. High Street
Akron, Ohio 44308

Steelworkers of America, United
Five Gateway Center
Pittsburgh, Pennsylvania 15222

United Auto Workers
Solidarity House
8000 East Jefferson Avenue
Detroit, Michigan 48214

Teamsters, International Brotherhood of
25 Louisiana Avenue, N.W.
Washington, D.C. 20001

APPENDIX C

Nomenclature

C.1 FORMS OF AIR CONTAMINANTS

Particulates

1. *Dust*—formed from solid material by mechanical processes such as grinding, blasting and drilling. Examples: silica, talc, asbestos, and lead dusts.
2. *Fume*—small, solid particles formed by vaporization and subsequent condensation. Example: cadmium fume produced by heating the metal to form submicrometer particulate that oxidizes to cadmium oxide.
3. *Mist*—liquid particulates formed by direct atomization from a liquid or condensation from the gaseous state. Example: oil mist from coolants on machinery operations, paint mist from spray painting, and plating mists.

Gases. Formless fluids that occupy the entire space of the enclosure and can be changed to a liquid or solid state only under increased pressure or decreased temperature. Examples: hydrogen sulfide, carbon monoxide, and chlorine.

Vapors. Evaporation products of substances normally liquid or solid at normal temperature and pressure. Examples: carbon disulfide and trichloroethylene.

C.2 ACRONYMS FOR ORGANIZATIONS

AAIH	American Academy of Industrial Hygiene
ABIH	American Board of Industrial Hygiene
ACGIH	American Conference of Governmental Industrial Hygiene
ACIL	American Council of Independent Laboratories
ACS	American Chemical Society
AIChE	American Institute of Chemical Engineers
AIHA	American Industrial Hygiene Association
AIME	American Institute of Mining, Metallurgical, & Petroleum Engineers
AMA	American Medical Association
ANS	American Nuclear Society, Inc.
ANSI	American National Standards Institute
APCA	Air Pollution Control Association
APHA	American Public Health Association
ASA	Acoustical Society of America

ASHRAE	American Society of Heating, Refrigerating, and Air Conditioning Engineers
ASSE	American Society of Safety Engineers
ASTM	American Society for Testing and Materials
BCSP	Board of Certified Safety Professionals of the Americas, Inc.
BOHS	British Occupational Hygiene Society
CFR	Code of Federal Regulations
CMA	Chemical Manufacturers Association
CSA	Construction Safety Act (Contract Work Hours and Safety Standards Act)
CSHO	Compliance Safety and Health Officer, OSHA
DOD	Department of Defense
DOL	Department of Labor
DOT	Department of Transportation
EPA	Environmental Protection Agency
FM	Factory Mutual System
HFS	Human Factors Society, Inc
HHS	Department of Health and Human Services
ICC	Interstate Commerce Commission
IHF	Industrial Health Foundation of America, Inc.
IMA	Industrial Medical Association, Inc.
ISEA	Industrial Safety Equipment Association, Inc.
ISRP	International Society for Respiratory Protection
NACOSH	National Advisory Committee on Occupational Safety and Health
NBS	National Bureau of Standards, Department of Commerce
NECA	National Electrical Contractors Association
NFPA	National Fire Protection Association
NIOSH	National Institute for Occupational Safety and Health
NSC	National Safety Council
OSHA	Occupational Safety and Health Administration, U.S. Department of Labor
OSHRC	Occupational Safety and Health Review Commission
PCA	Public Contracts Act (Walsh-Healey)
SCA	Service Contracts Act
SIC	Standard Industrial Classification
UL	Underwriters Laboratories, Inc.

Source: National Institute For Occupational Safety and Health.

APPENDIX D

Industrial Hygiene Checklist for Design and Construction Review

The following checklist was developed for use by industrial hygienists in communicating with design and engineering personnel. Reviews at each design and construction phase will minimize industrial hygiene needs after start-up. Identification of project phase timing should be done as early as possible and reviews completed early enough for modifications to be completed within time commitments.

I. Information to be developed during research and development stages
  A. Inventory of chemical and physical agents.
  B. Physical and chemical properties on each compound
    1. Vapor pressure, reactivity, flammability, and solubility
    2. Shelf life or stability at conditions of storage and handling
    3. Corrosiveness to construction and packaging materials
    4. Cleaning and decontamination methods
  C. Toxicology and medical
    1. Sufficient toxicological data
    2. Consequences of acute and chronic overexposure.
    3. First aid procedures.
    4. Medical diagnosis and treatment information.
  D. Industrial hygiene
    1. Industrial hygiene exposure guidelines for airborne contaminants
    2. Surface contaminant guidelines for compounds absorbed through the skin
    3. Personal protective equipment with limitations of their use
    4. Subjective response data (odor, irritation)
    5. Air sampling and analytical methods
    6. Continuous air monitoring (CAM) system for significant contaminants

---

*Bohl and Langer (1987). Reprinted by permission of R. Langer. Bohl, R. W. and Langer, R. R. (1979), Presented at American Industrial Hygiene Conference, May 28, 1979, Chicago, Illinois. Reprinted by courtesy of R. Langer.

    7. Training information, that is, effects of overexposure, methods for safe handling, and procedures for using protective equipment

II. Preengineering review
  A. Site selection for compatibility
    1. History of site
    2. Minimum neighborhood exposure
    3. Potential interacting compounds adequately separated
    4. Location in relation to prevailing winds
  B. Plant construction
    1. Process outside or keep building partly open where possible
    2. Floors designed for efficient housekeeping
      a. Closed floors where particulates must be contained
      b. Closed floors sloped to drains for wet washing
      c. Floor materials compatible with the chemicals used or surfaces sealed
      d. Dikes and curbs plus a recovery sump for potential spills
      e. Waste holding and disposal systems for wash solutions
    3. Nonabsorbing surfaces for highly toxic compounds
    4. Connections for housekeeping (water and steam for washdown or exhaust system for vacuum cleaning)
    5. Design for snow and ice control where required
    6. Containment walls designed for minimum leakage: vapor, acoustic, thermal, or radiation
    7. Adequate light for work areas
  C. Process layout
    1. Isolation of high hazard and surface contamination areas with controlled access or entry points
    2. Appropriate separation of control rooms, control laboratories, and maintenance areas with convenient access to the process area
    3. Appropriate separation of offices, lunch rooms, and locker rooms
    4. Cleaning, repair, and storage facilities for respiratory and other personal protective equipment
    5. Safety showers and eyewash shower location (temperature control, if needed, at outdoor stations)
    6. Equipment placement to optimize containment, ventilation, and convenient operation
  D. Process design—Best practical engineering control to minimize potential sources of emissions
    1. Closed vs. open systems
      a. Filters, dryers, and conveyors
      b. Vacuum pump vs. barometric condensor

        c. Closed waste systems
        d. Closed loop material transport
    2. Leak protection
        a. Transfer connections designed for speed and minimum dripping
        b. Blow-out for transfer lines with vapor recycle
        c. Mechanical seals vs. packing glands
    3. Emission control
        a. Process vessels and tanks closed with level control and vented to condensors, scrubbers or adsorbers
        b. Waste discharges recycled or treated
        c. Local exhaust ventilation, as needed.
    4. Process sampling
        a. Minimum number of manual sampling points
        b. Minimum number and quantity of samples
        c. Low-exposure systems (automatic, in-line bypass, ram type valves, hoods, or enclosures.
    5. Continuous air-monitoring system with data processing where appropriate
        a. Leak detection near equipment
        b. Work area monitoring for determining employee exposures
    6. Equipment noise levels
        a. Noise criteria considered in the design or purchase of equipment
        b. Suppression, containment, or isolation of noisy equipment
    7. Other physical agent stresses
        a. Heat shielding and ventilation or air conditioning
        b. Ionizing and nonionizing radiation source containment

E. Ventilation
    1. General ventilation
        a. Intake ducts isolated from discharge sources
        b. Recycle tempered air where possible
        c. Exhaust rate balanced with makeup air (heated or cooled as needed)
    2. Local exhaust ventilation
        a. Applications
            i. Laboratory hoods
            ii. Process hoods for manual handling operations or for equipment that generates airborne contaminants
            iii. Process vessel and tank venting
            iv. Solvent and sample storage cabinets

b. Hood design
    i. Airfoil design such as for laboratory hoods
    ii. Compensating or external air-supplied hoods for energy conservation
    iii. Enclose contaminant source when possible
    iv. Downdraft for solids, crossdraft for vapor or solids—avoid using canopy hoods
    v. Adequate capture velocity
    vi. Manometers in duct near inlet for system check.
    vii. External airflow interferences minimized to reduce turbulence.
    viii. Clean-out openings for plenums
c. Duct system
    i. Properly sized, minimum length, wide-angled bends and under negative pressure
    ii. Adequate transport velocity for particulates
    iii. Clean out openings for heavy or agglomerating particulates
    iv. Drains provided for mists or condensing vapors or insulated to prevent condensation
    v. Blast gates minimized (not used with highly toxic materials)
    vi. Provision for convenient testing of system
d. Exhaust air-cleaning equipment
    i. Type dependent on material and properties
    ii. Easy access for cleaning and maintenance
    iii. Isolated from work area
    iv. Monitoring for recycled air
e. Fan or blower, positioned last and located to provide negative duct pressure inside buildings
    i. Proper size for maximum demand with provision for variable speed if flexibility needed
    ii. Compatible materials of construction
    iii. Isolated from work areas, but located for convenient maintenance
    iv. Discharge vented away from building air inlets or work areas
    v. Separate fan for remote or intermittently operated hoods

APPENDIX E

Silica and Silicates Nomenclature

I. Free silica—not in combination with cation
    A. Crystalline—large crystals
        1. Quartz—stable to 867°C
        2. Trydimite—stable to 867°C to 1470°C
        3. Crystobalite—stable to 1470°C to M.P.
    B. Cryptocrystalline—microcrystalline, bonded with amorphous silica
        1. Flint
        2. Chert
        3. Agate, onyx
    C. Amorphous
        1. Diatomite—natural, diatoms
        2. Vitreous silica—heat crystalline silica to form liquid silica, then cool (glass)
        3. Synthetic silica (precipitated silica or colloidal silica)
            sodium silicates (HiSil)
            hydrated calcium silicate (Silene)

II. Combined silica—Si Q_2 in combination with various cations as silicates, causes pneumoconiosis
    A. Asbestos—mineral silicates, fibrous
        Serpentine
            Chrysotile (white)
        Amphibole
            Crocidolite (blue)
            Anthophyllite
            Tremolite
            Actinolite
            Amosite
    B. Talc—platelets, hydrated magnesium silicate (Mg_3 Si_4 O_{10} $(OH)_2$)
        Impurities
            Tremolite
            Anthophyllite
            Serpentine

  - Quartz
- III. Silicates—SiO_2 in combination with various cations as silicates, *not* fibrogenic
  - A. Kaolin (China clay)—hydrous aluminum silicate $Al_2O_3 \cdot 2SiO_2 \cdot 2H_2O$
  - B. Bentonite—fine grained clay, a silicate
  - C. Mica—muscovite, vermiculite (6)
  - D. Olivine clay (Fosterite $Mg_2 \cdot SiO_4$) and (Fayalite $Fe_2 \cdot SiO_4$)
  - E. Pumice—volcanic silicate glasses
  - F. Zeolite—hydrous aluminum silicates

Source: NIOSH (undated).

INDEX

Index Terms **Links**

Index Terms **Links**